FIG 1

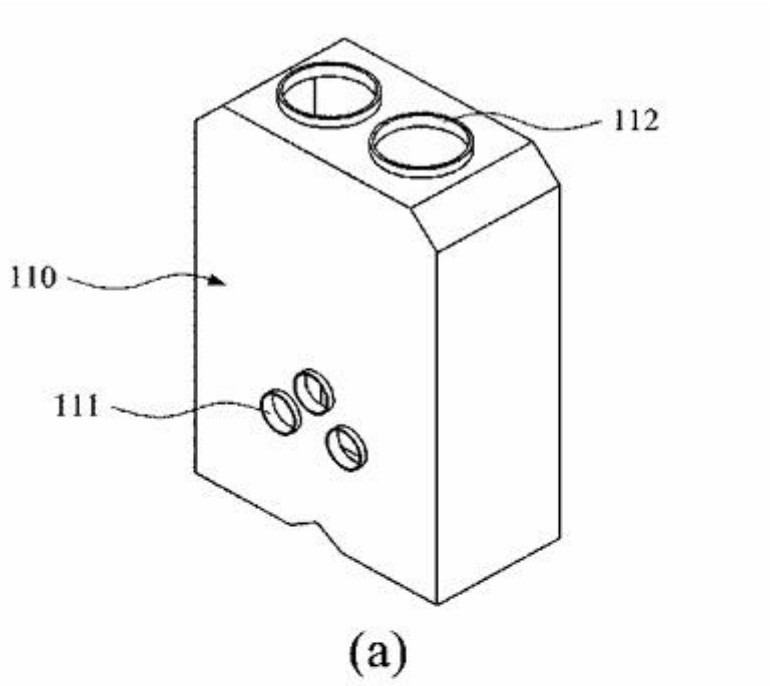

(a)

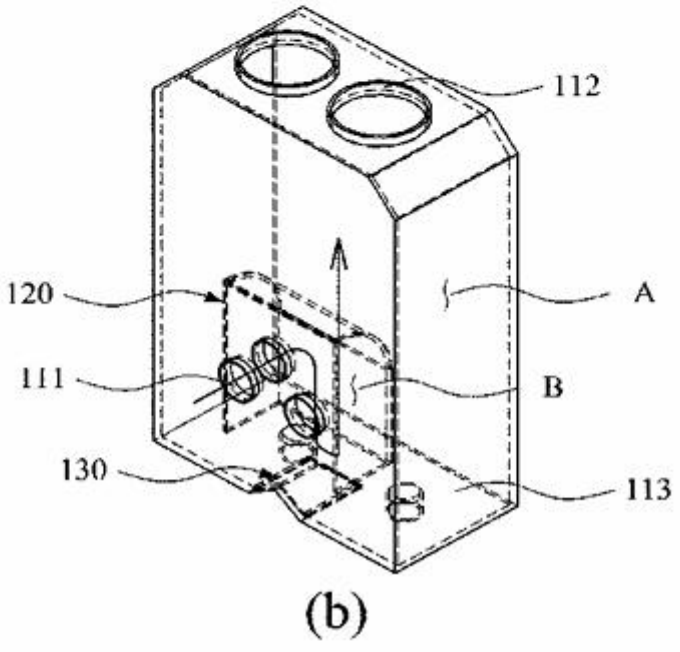

(b)

FIG 2

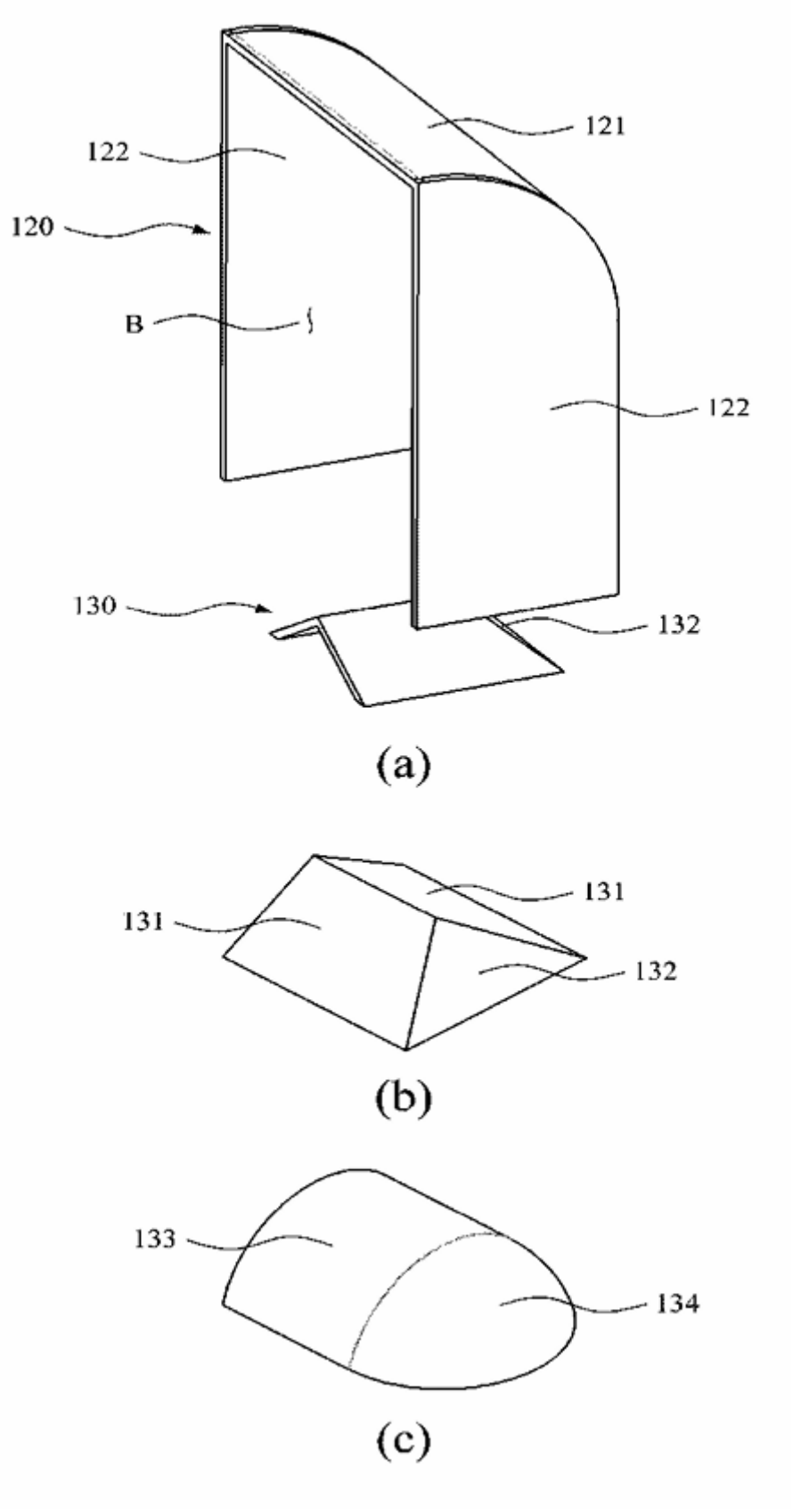

FIG 3

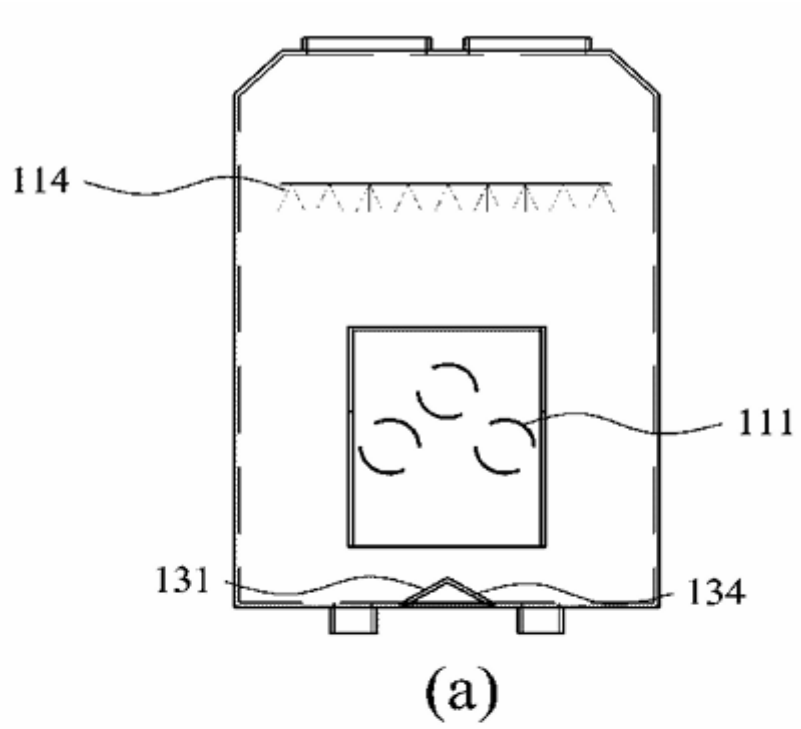

(a)

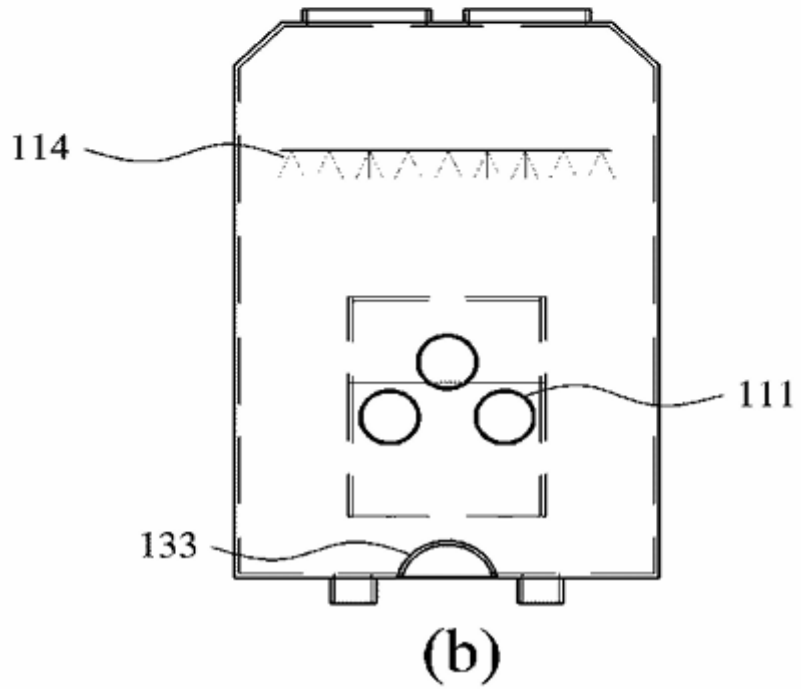

(b)

FIG 4

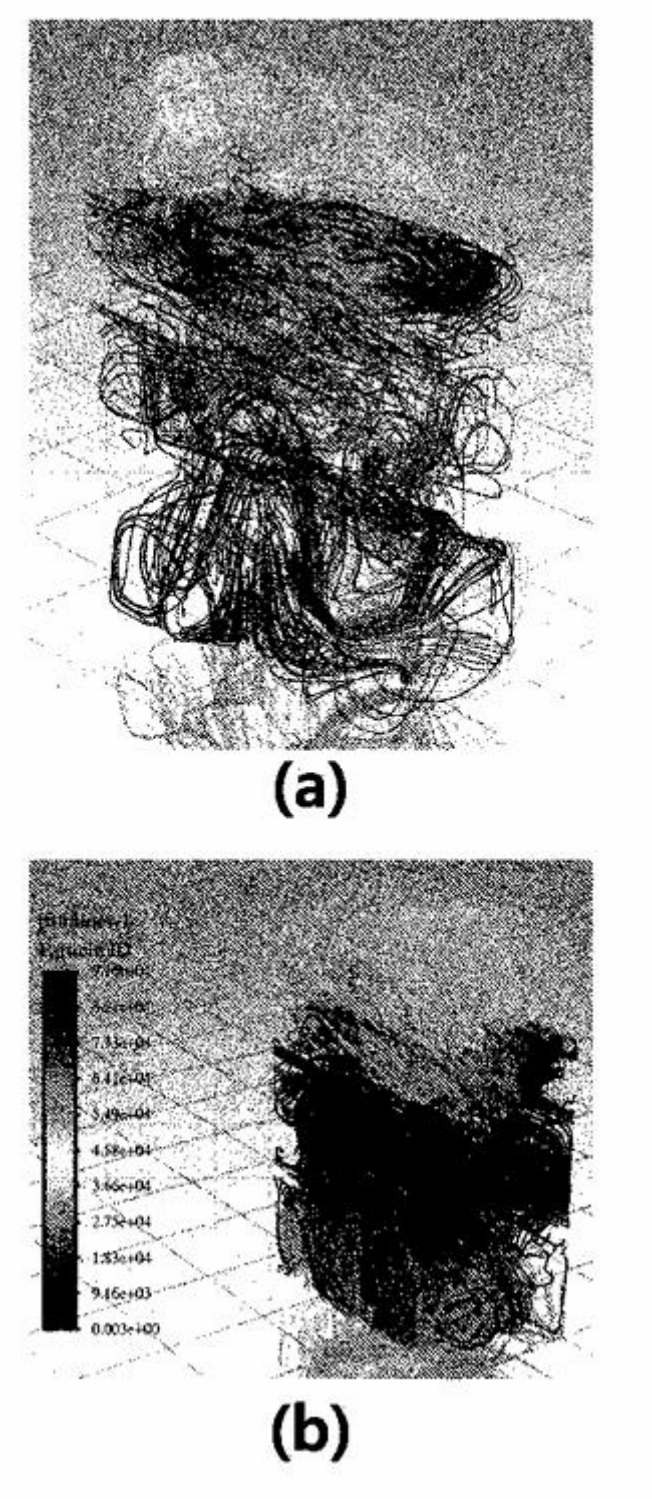

FIG 5

