FIG. 1

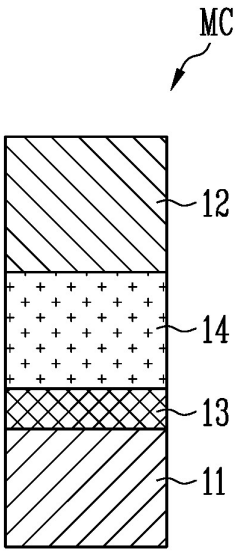

FIG. 2

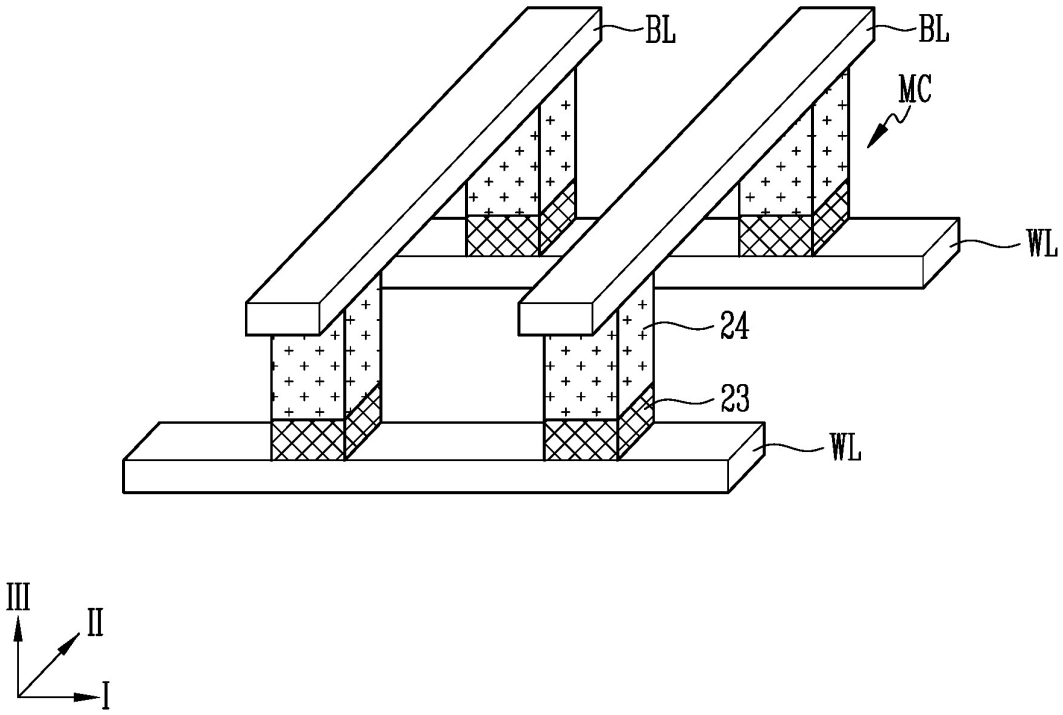

FIG. 3A

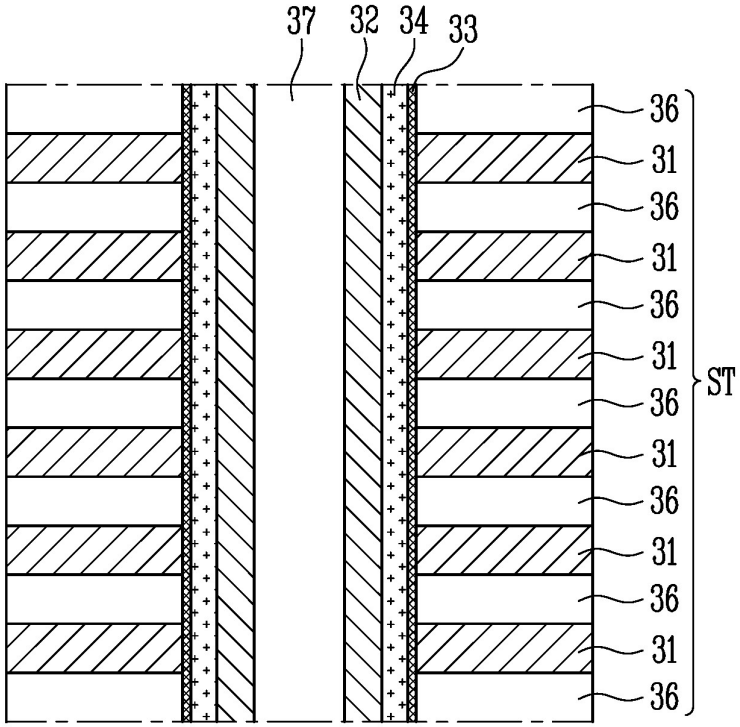

FIG. 3B

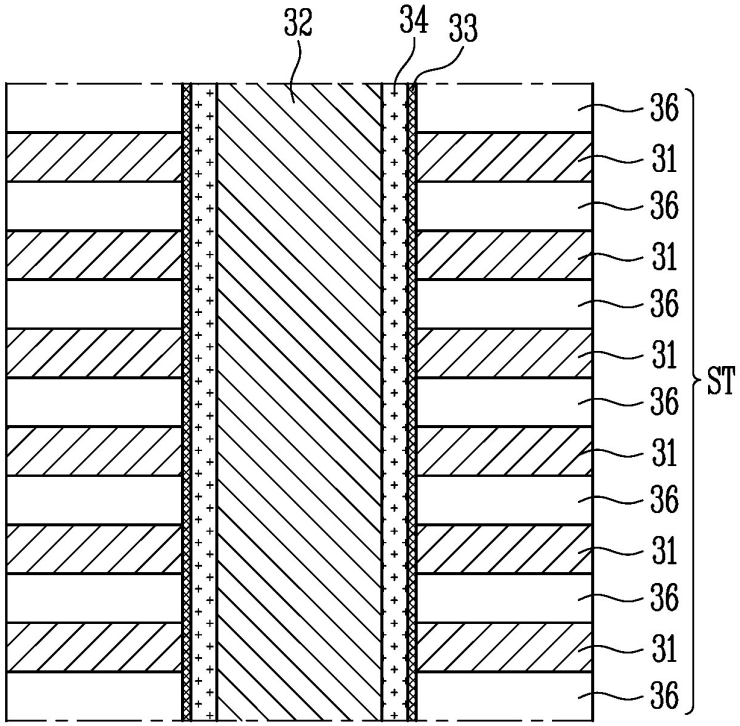

FIG. 4

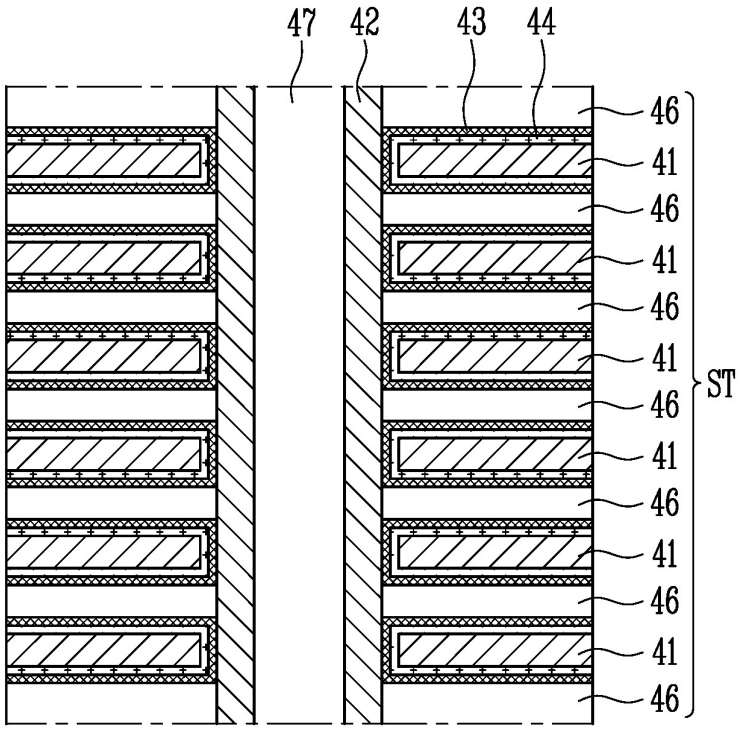

FIG. 5A

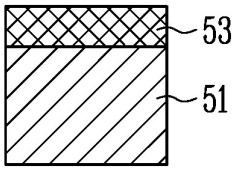

FIG. 5B

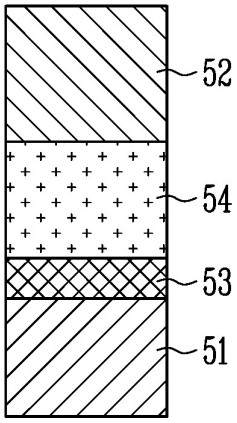
52
54
53
51

FIG. 6

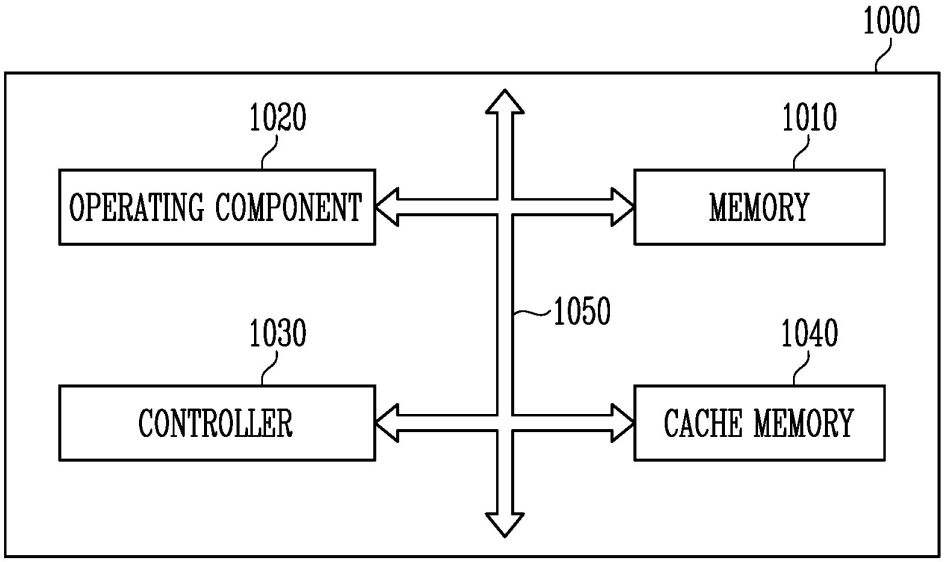
1000
1020
OPERATING COMPONENT
1010
MEMORY
1050
1030
CONTROLLER
1040
CACHE MEMORY

FIG. 7

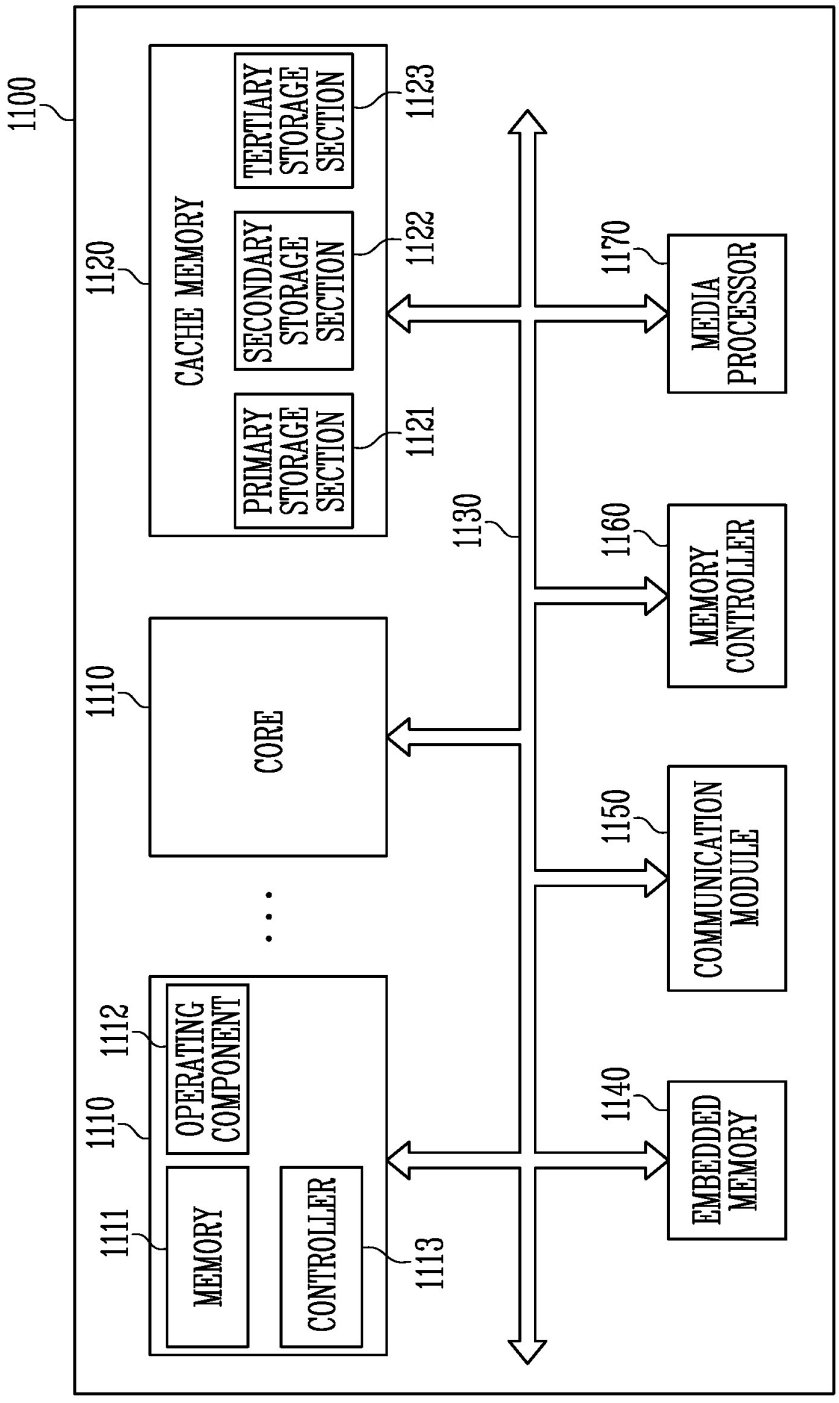
1100
1120
CACHE MEMORY
PRIMARY STORAGE SECTION
1121
SECONDARY STORAGE SECTION
1122
TERTIARY STORAGE SECTION
1123
1130
1110
CORE
1111
MEMORY
1112
OPERATING COMPONENT
1113
CONTROLLER
1140
EMBEDDED MEMORY
1150
COMMUNICATION MODULE
1160
MEMORY CONTROLLER
1170
MEDIA PROCESSOR

FIG. 8

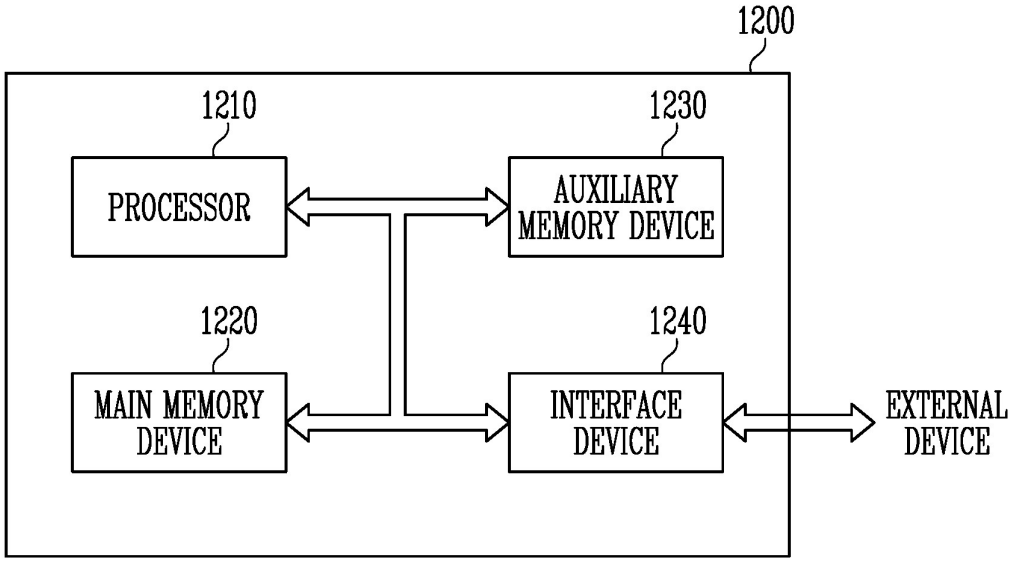
1200
1210
PROCESSOR
1230
AUXILIARY MEMORY DEVICE
1220
MAIN MEMORY DEVICE
1240
INTERFACE DEVICE
EXTERNAL DEVICE

FIG. 9

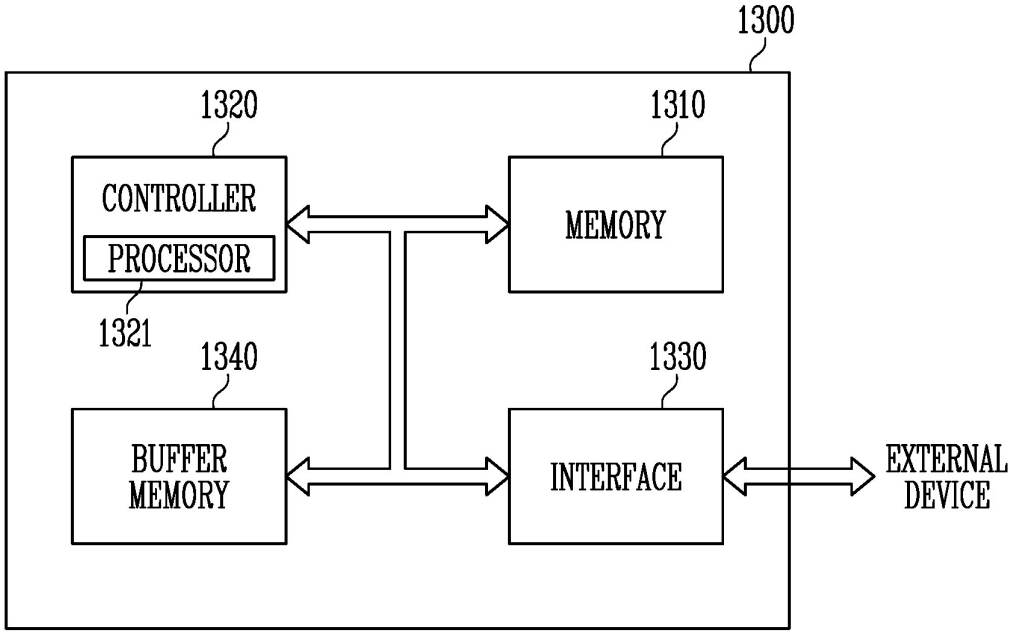
1300
1320
CONTROLLER
PROCESSOR
1321
1310
MEMORY
1340
BUFFER MEMORY
1330
INTERFACE
EXTERNAL DEVICE