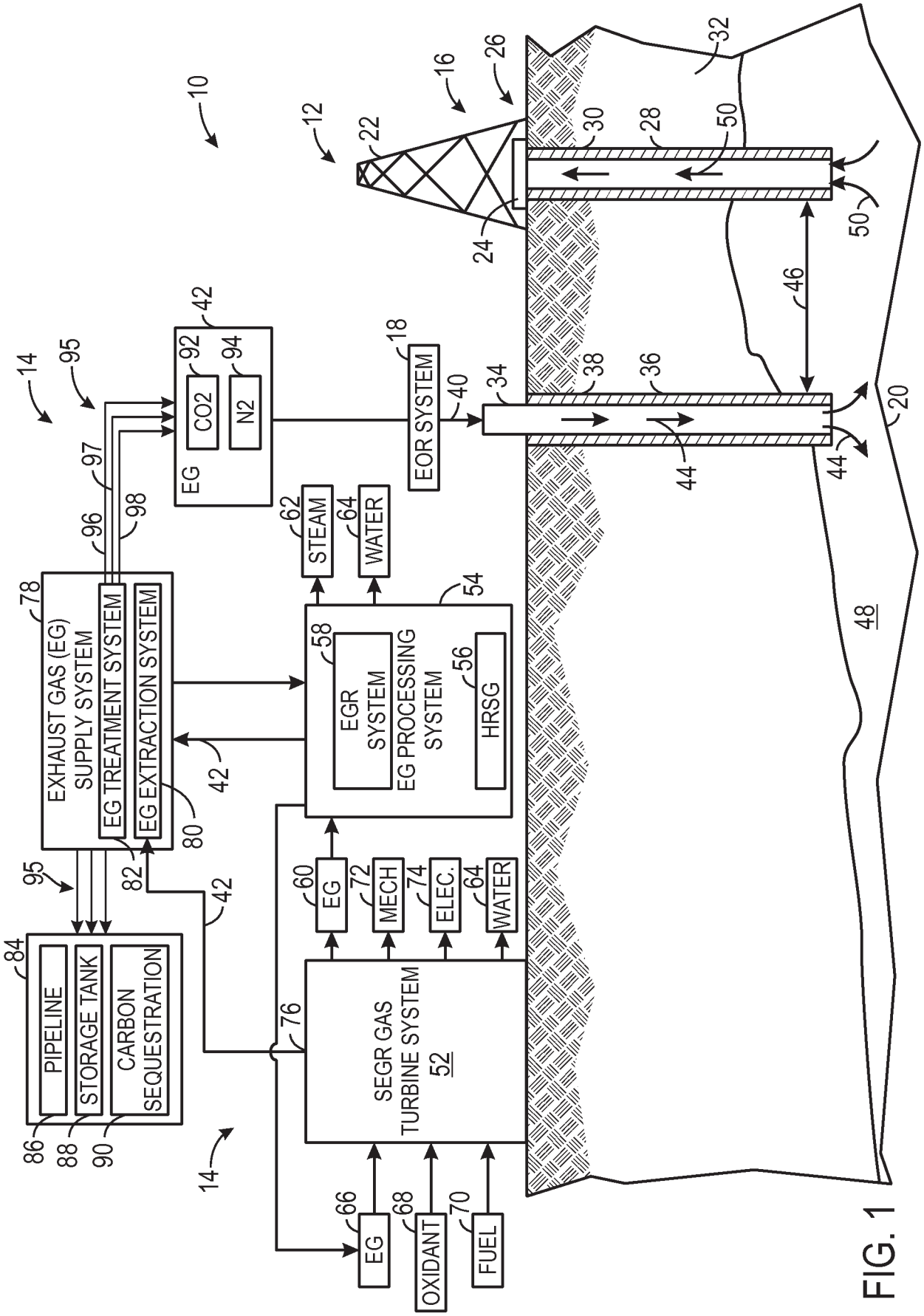
10
12
14
16
18
20
22
24
26
28
30
32
34
36
38
40
42
44
46
48
50
52
54
56
58
60
62
64
66
68
70
72
74
76
78
80
82
84
86
88
90
92
94
95
96
97
98
CO2
N2
EG
EOR SYSTEM
STEAM
WATER
EXHAUST GAS (EG) SUPPLY SYSTEM
EG TREATMENT SYSTEM
EG EXTRACTION SYSTEM
EGR SYSTEM
EG PROCESSING SYSTEM
HRSG
EG
MECH
ELEC.
WATER
PIPELINE
STORAGE TANK
CARBON SEQUESTRATION
SEGR GAS TURBINE SYSTEM
52
EG
OXIDANT
FUEL

FIG. 1

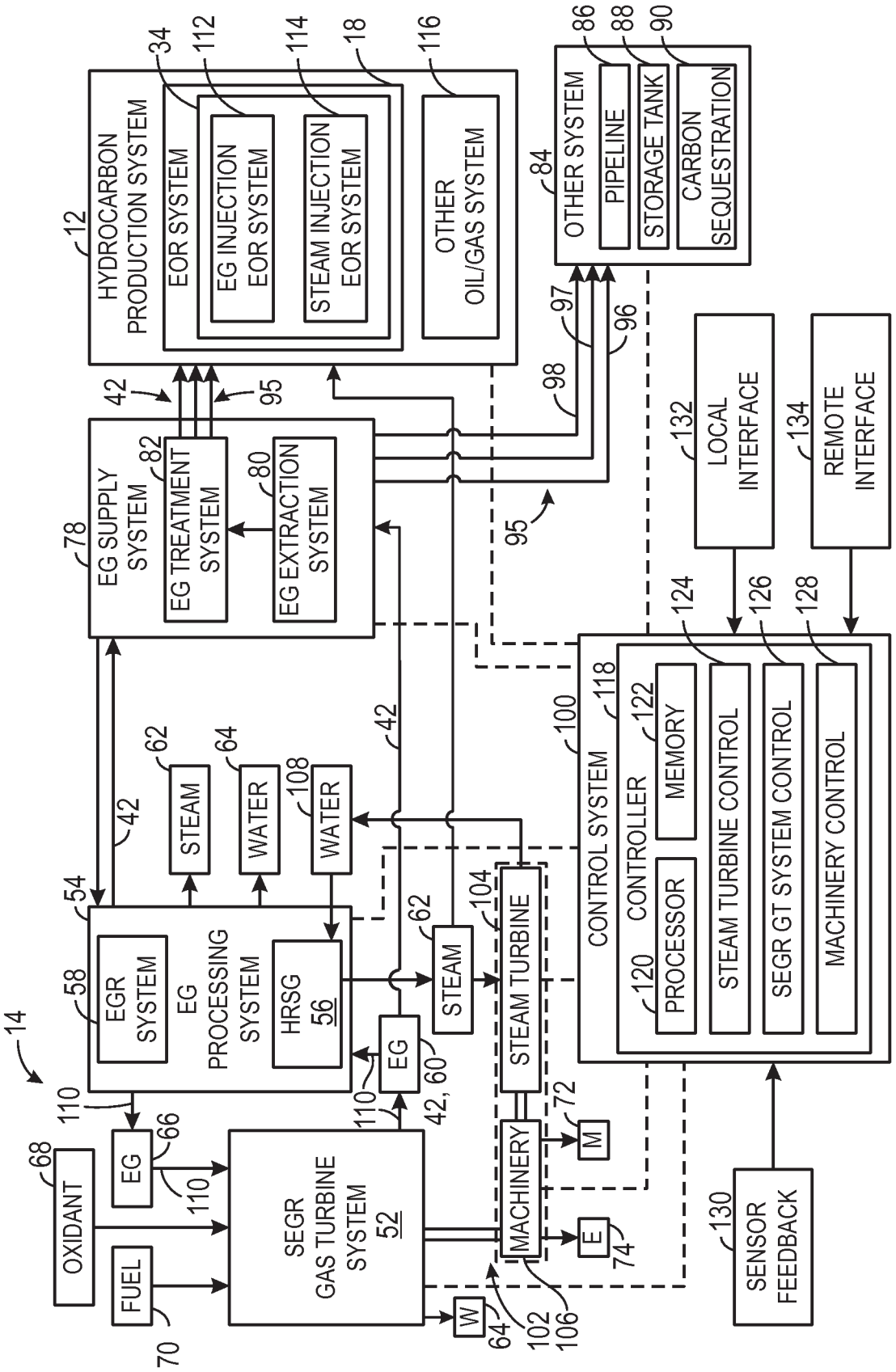
HYDROCARBON PRODUCTION SYSTEM
12
EOR SYSTEM
34
EG INJECTION EOR SYSTEM
112
STEAM INJECTION EOR SYSTEM
114
18
OTHER OIL/GAS SYSTEM
116
OTHER SYSTEM
84
PIPELINE
86
STORAGE TANK
88
CARBON SEQUESTRATION
90
EG SUPPLY SYSTEM
78
EG TREATMENT SYSTEM
82
EG EXTRACTION SYSTEM
80
42
95
97
96
98
LOCAL INTERFACE
132
REMOTE INTERFACE
134
CONTROL SYSTEM
100
CONTROLLER
118
PROCESSOR
120
MEMORY
122
STEAM TURBINE CONTROL
124
SEGR GT SYSTEM CONTROL
126
MACHINERY CONTROL
128
STEAM
62
WATER
64
WATER
108
EGR SYSTEM
58
EG PROCESSING SYSTEM
54
HRSG 56
EG
60
STEAM
STEAM TURBINE
104
MACHINERY
102
106
M
72
E
74
W
64
14
110
OXIDANT
68
FUEL
70
EG
66
SEGR GAS TURBINE SYSTEM 52
SENSOR FEEDBACK
130

FIG. 2

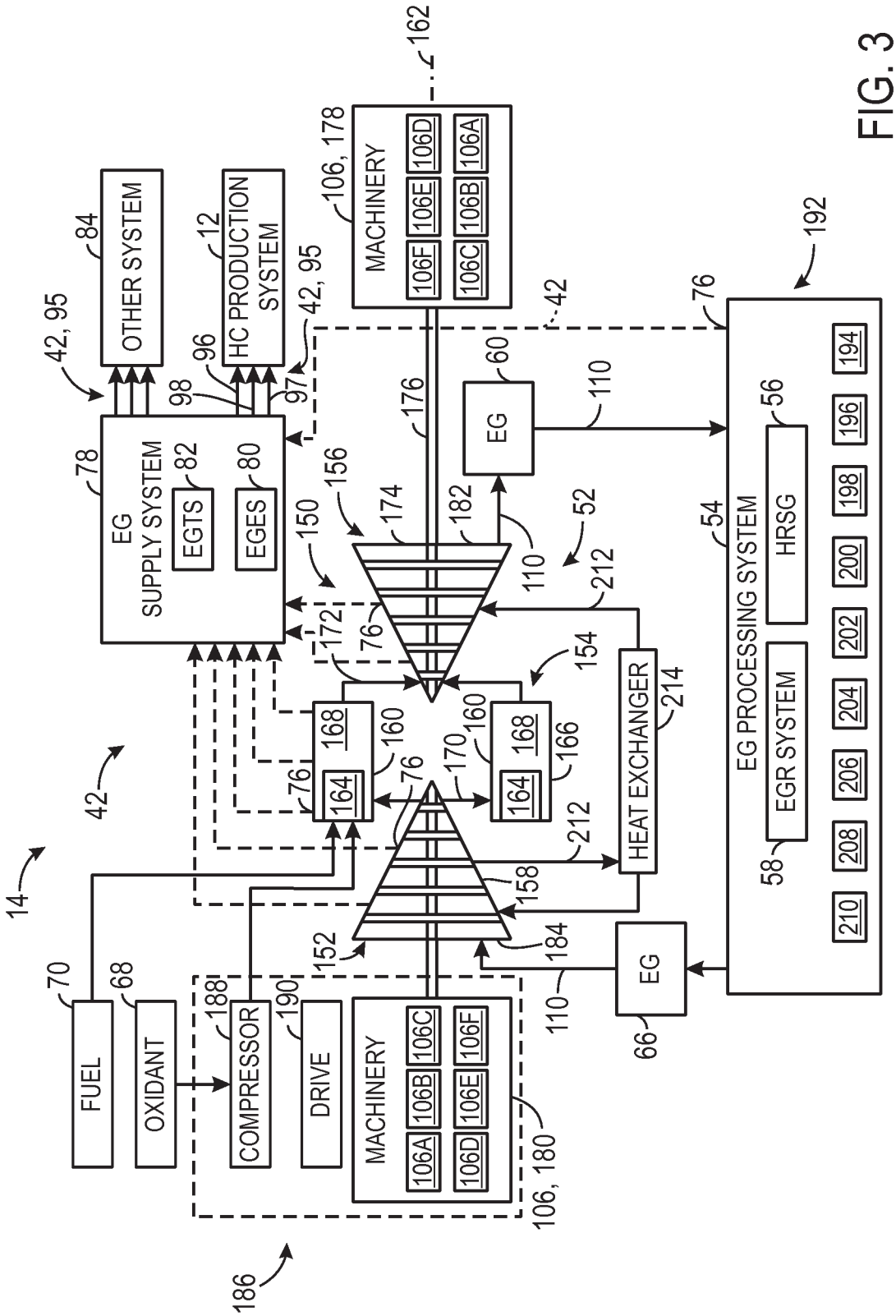
10
14
42
186
FUEL
70
OXIDANT
68
COMPRESSOR
188
DRIVE
190
MACHINERY
106A
106B
106C
106D
106E
106F
106, 180
152
158
184
110
EG
66
HEAT EXCHANGER
214
212
154
168
164
160
166
170
76
172
150
156
174
182
52
EG
60
176
162
MACHINERY
106, 178
42, 95
42
EG SUPPLY SYSTEM
78
EGTS
82
EGES
80
98
96
97
HC PRODUCTION SYSTEM
12
OTHER SYSTEM
84
192
EG PROCESSING SYSTEM
54
HRSG
56
EGR SYSTEM
58
194
196
198
200
202
204
206
208
210

FIG. 3

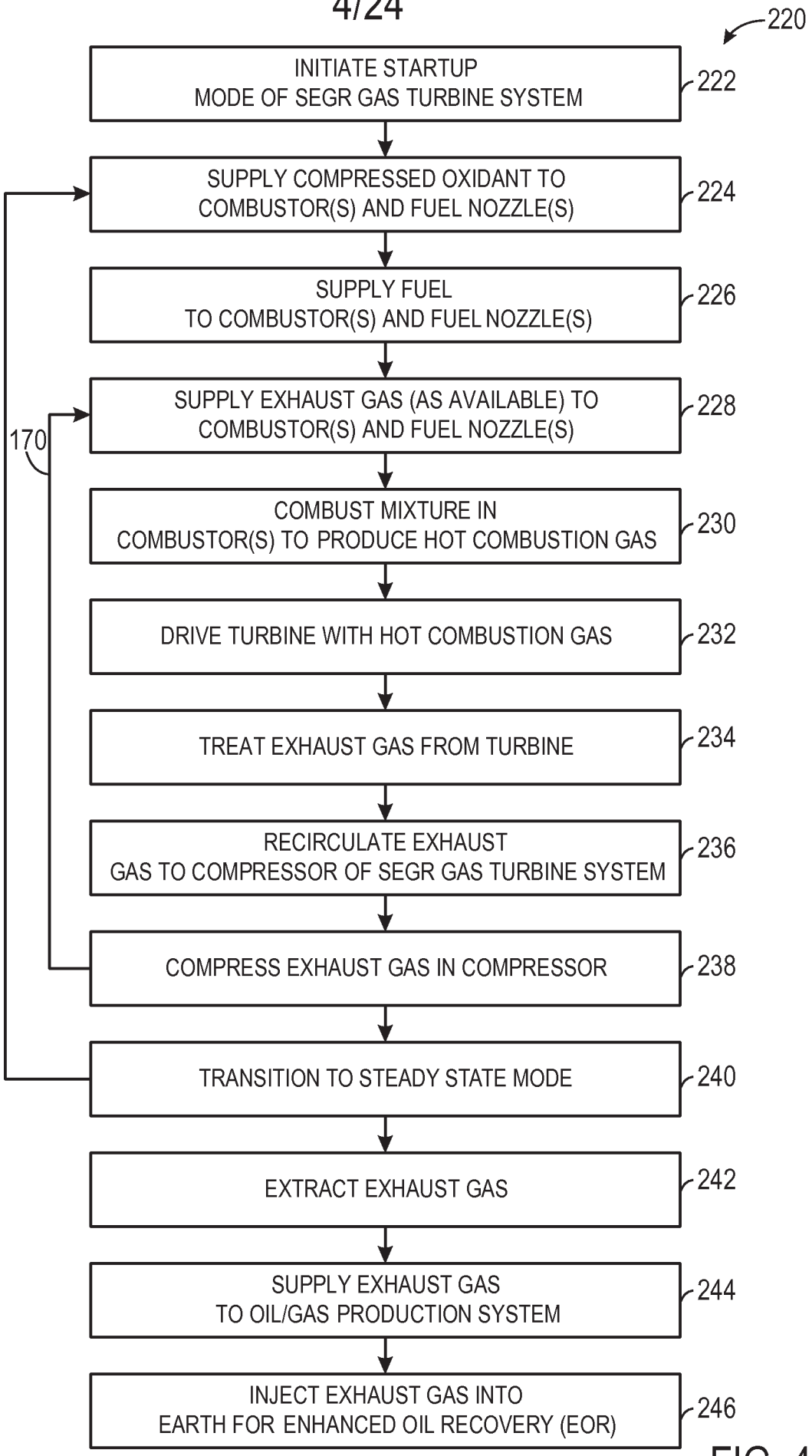
220
INITIATE STARTUP MODE OF SEGR GAS TURBINE SYSTEM
222
SUPPLY COMPRESSED OXIDANT TO COMBUSTOR(S) AND FUEL NOZZLE(S)
224
SUPPLY FUEL TO COMBUSTOR(S) AND FUEL NOZZLE(S)
226
SUPPLY EXHAUST GAS (AS AVAILABLE) TO COMBUSTOR(S) AND FUEL NOZZLE(S)
228
170
COMBUST MIXTURE IN COMBUSTOR(S) TO PRODUCE HOT COMBUSTION GAS
230
DRIVE TURBINE WITH HOT COMBUSTION GAS
232
TREAT EXHAUST GAS FROM TURBINE
234
RECIRCULATE EXHAUST GAS TO COMPRESSOR OF SEGR GAS TURBINE SYSTEM
236
COMPRESS EXHAUST GAS IN COMPRESSOR
238
TRANSITION TO STEADY STATE MODE
240
EXTRACT EXHAUST GAS
242
SUPPLY EXHAUST GAS TO OIL/GAS PRODUCTION SYSTEM
244
INJECT EXHAUST GAS INTO EARTH FOR ENHANCED OIL RECOVERY (EOR)
246

FIG. 4

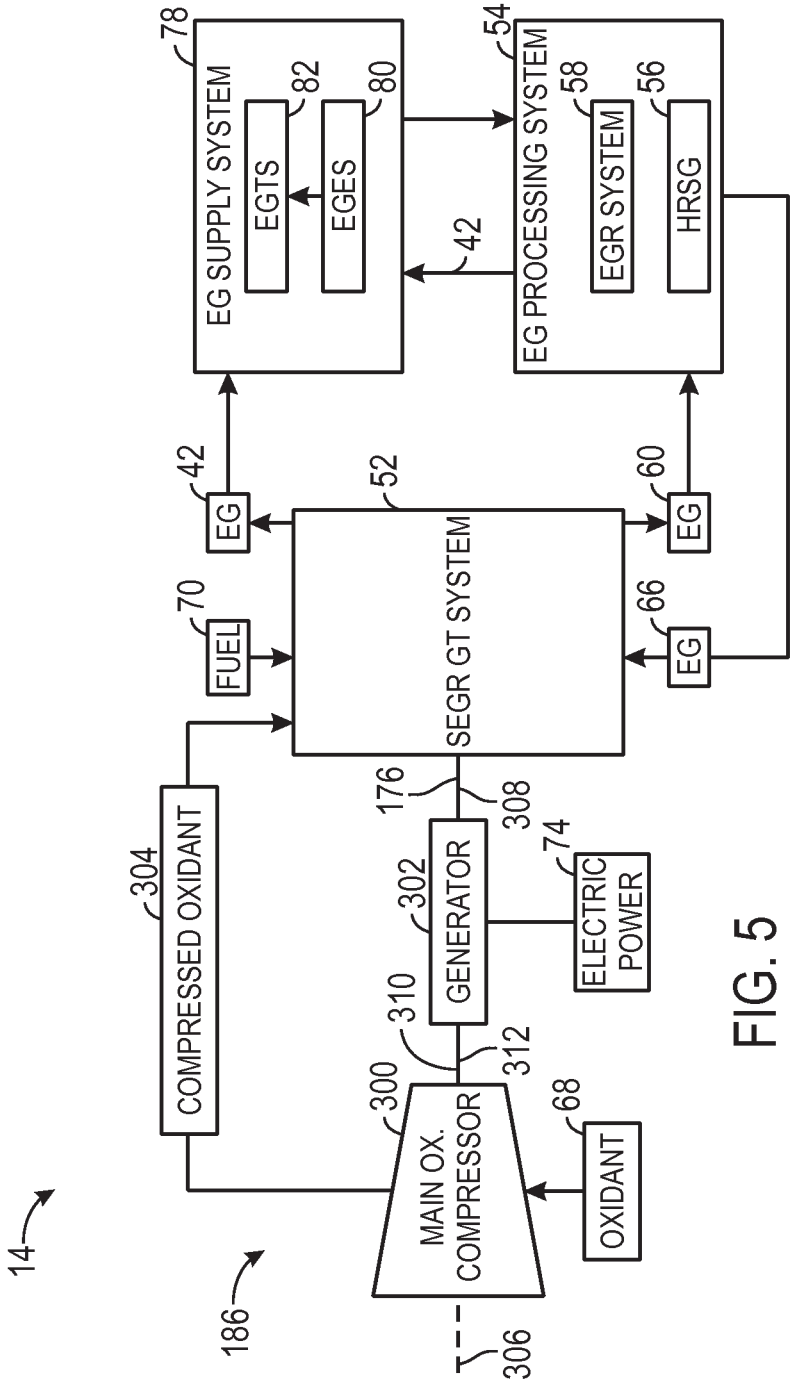
14
186
306
COMPRESSED OXIDANT
304
MAIN OX. COMPRESSOR
300
310
312
GENERATOR
302
176
308
ELECTRIC POWER
74
OXIDANT
68
FUEL
70
EG
42
SEGR GT SYSTEM
52
EG
66
EG
60
EG SUPPLY SYSTEM
78
EGTS
82
EGES
80
42
EG PROCESSING SYSTEM
54
EGR SYSTEM
58
HRSG
56

FIG. 5

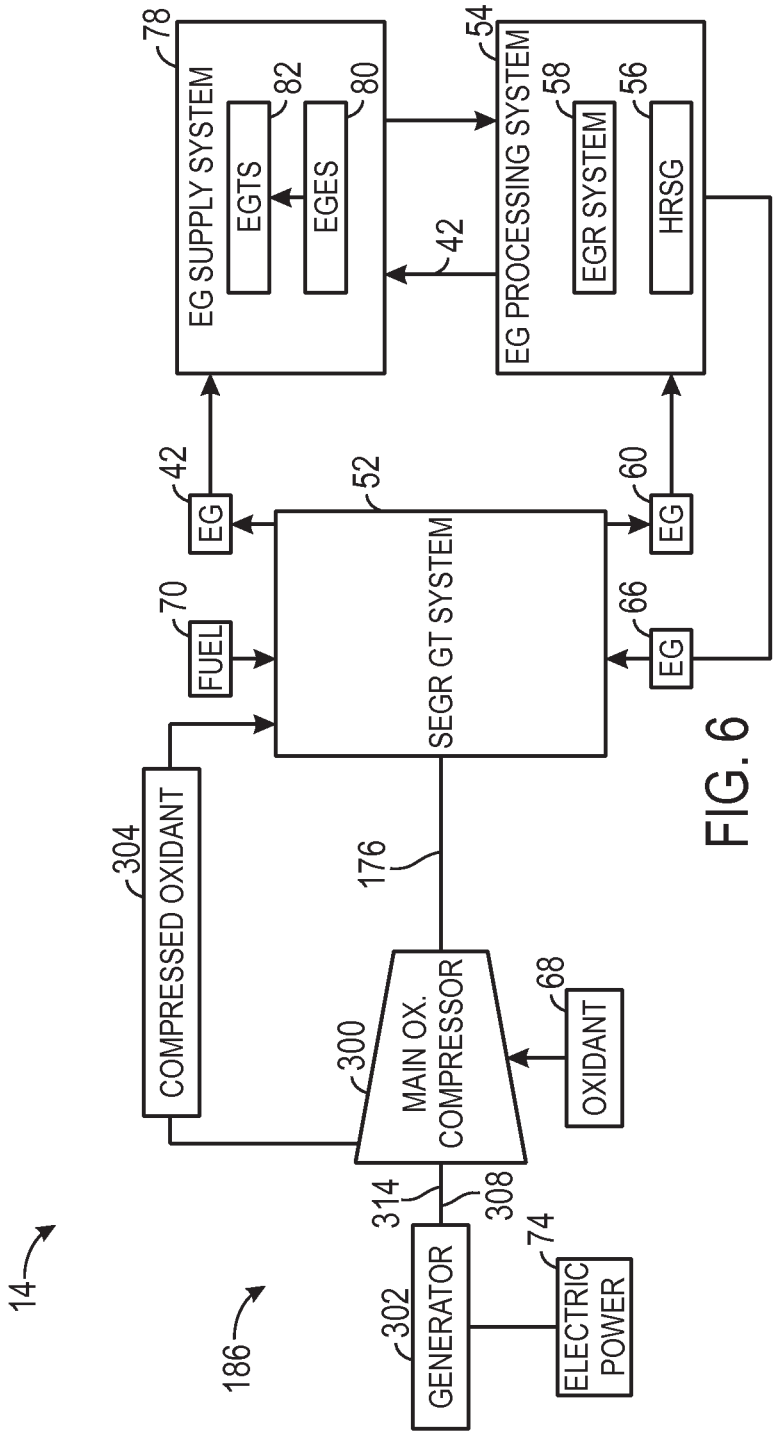
78
EG SUPPLY SYSTEM
EGTS
82
EGES
80
42
54
EG PROCESSING SYSTEM
58
EGR SYSTEM
56
HRSG
42
EG
52
SEGR GT SYSTEM
60
EG
70
FUEL
66
EG
304
COMPRESSED OXIDANT
176
300
MAIN OX. COMPRESSOR
68
OXIDANT
314
308
14
186
302
GENERATOR
74
ELECTRIC POWER

FIG. 6

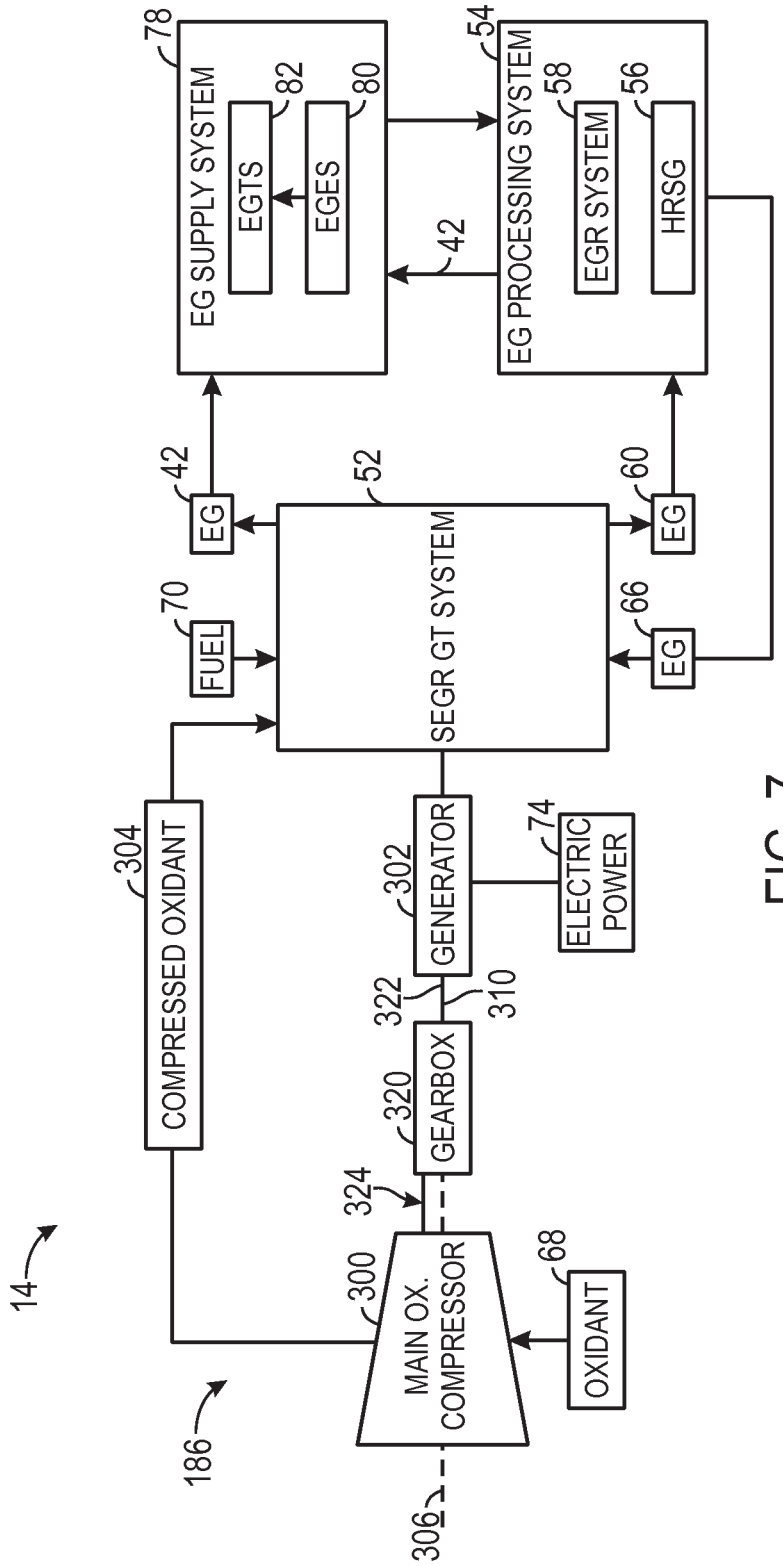
78
EG SUPPLY SYSTEM
EGTS
82
EGES
80
42
54
EG PROCESSING SYSTEM
58
EGR SYSTEM
56
HRSG
42
EG
52
SEGR GT SYSTEM
60
EG
70
FUEL
66
EG
304
COMPRESSED OXIDANT
302
GENERATOR
74
ELECTRIC POWER
322
310
320
GEARBOX
324
14
300
MAIN OX. COMPRESSOR
68
OXIDANT
186
306

FIG. 7

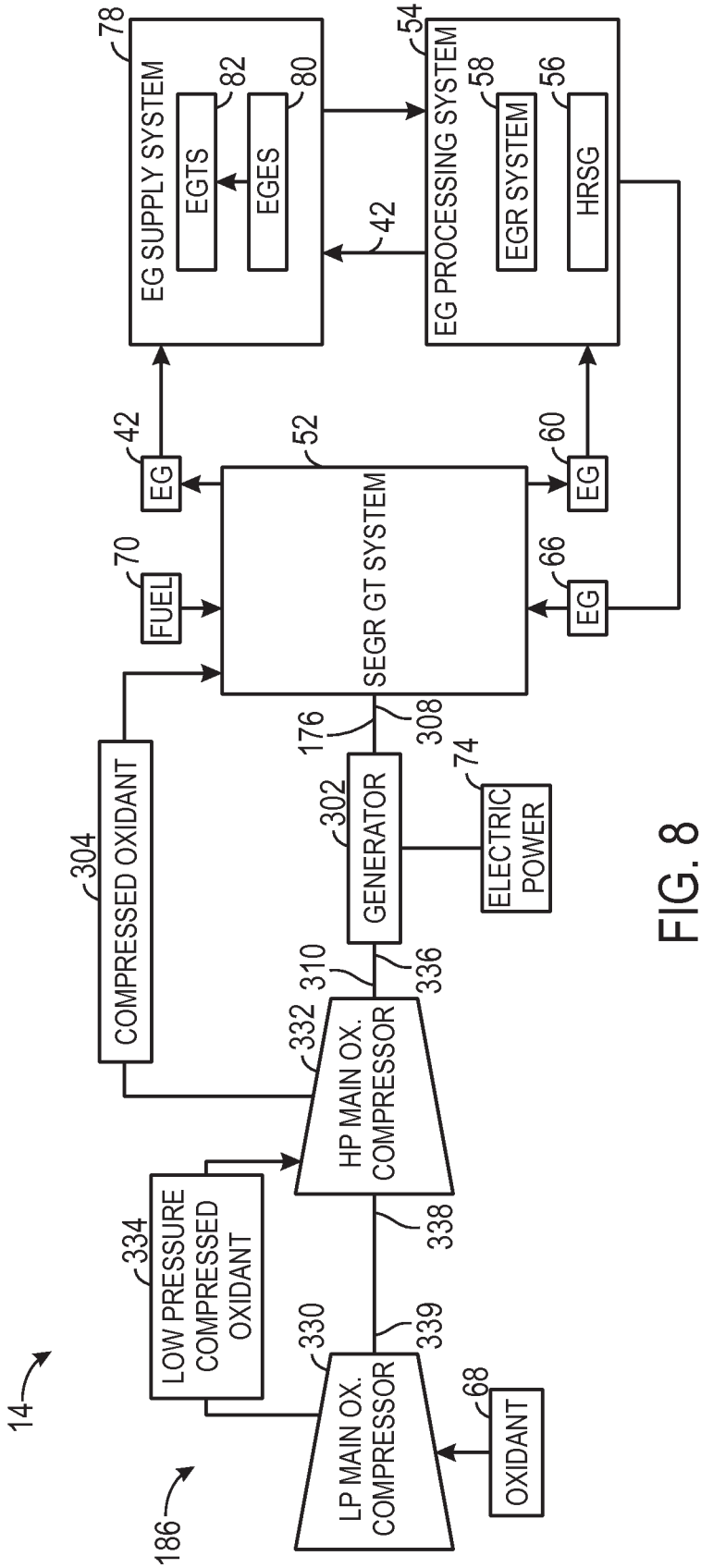
78
EG SUPPLY SYSTEM
EGTS
82
EGES
80
54
EG PROCESSING SYSTEM
58
EGR SYSTEM
56
HRSG
42
42
EG
52
SEGR GT SYSTEM
60
EG
70
FUEL
66
EG
176
308
304
COMPRESSED OXIDANT
302
GENERATOR
74
ELECTRIC POWER
310
336
332
HP MAIN OX. COMPRESSOR
334
LOW PRESSURE COMPRESSED OXIDANT
338
330
339
LP MAIN OX. COMPRESSOR
68
OXIDANT
14
186

FIG. 8

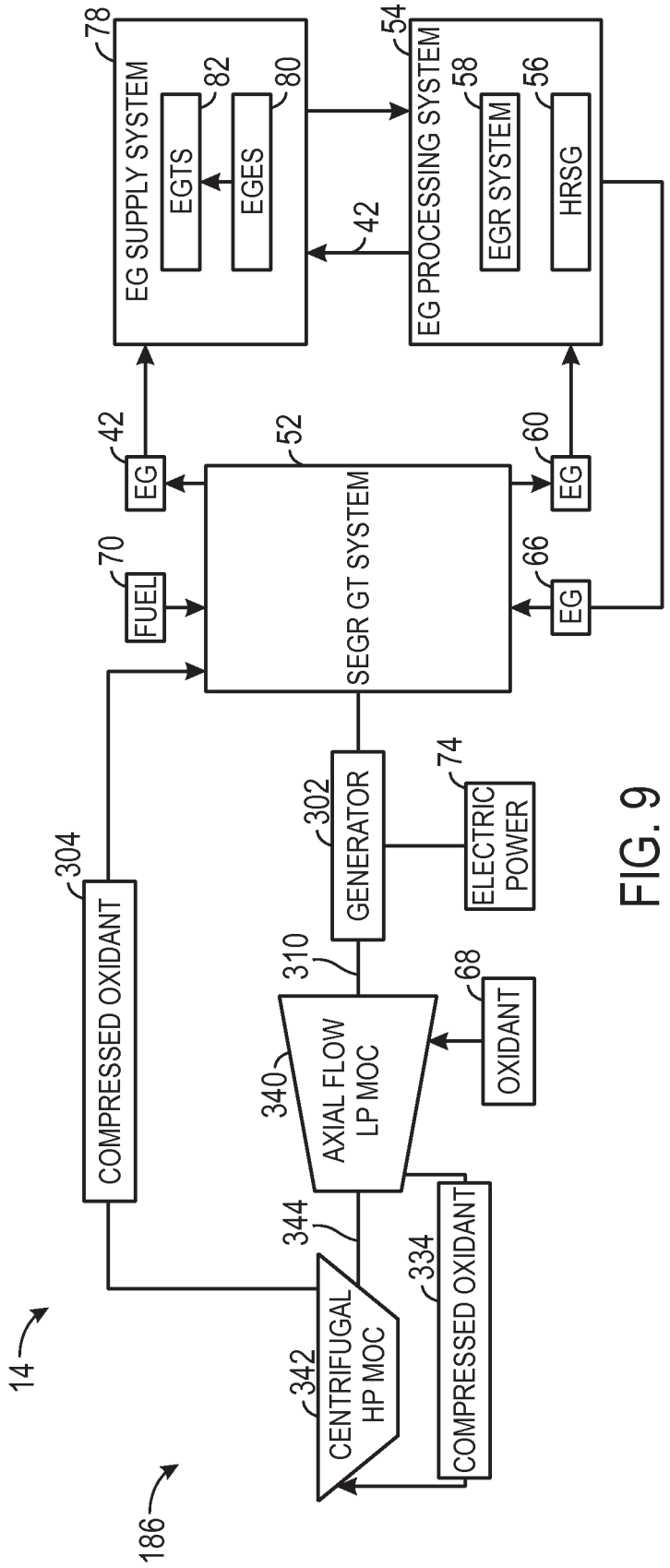
78
EG SUPPLY SYSTEM
EGTS
82
EGES
80
42
54
EG PROCESSING SYSTEM
58
EGR SYSTEM
56
HRSG
42
EG
52
SEGR GT SYSTEM
60
EG
70
FUEL
66
EG
304
COMPRESSED OXIDANT
302
GENERATOR
74
ELECTRIC POWER
310
68
OXIDANT
340
AXIAL FLOW LP MOC
344
334
COMPRESSED OXIDANT
342
CENTRIFUGAL HP MOC
14
186

FIG. 9

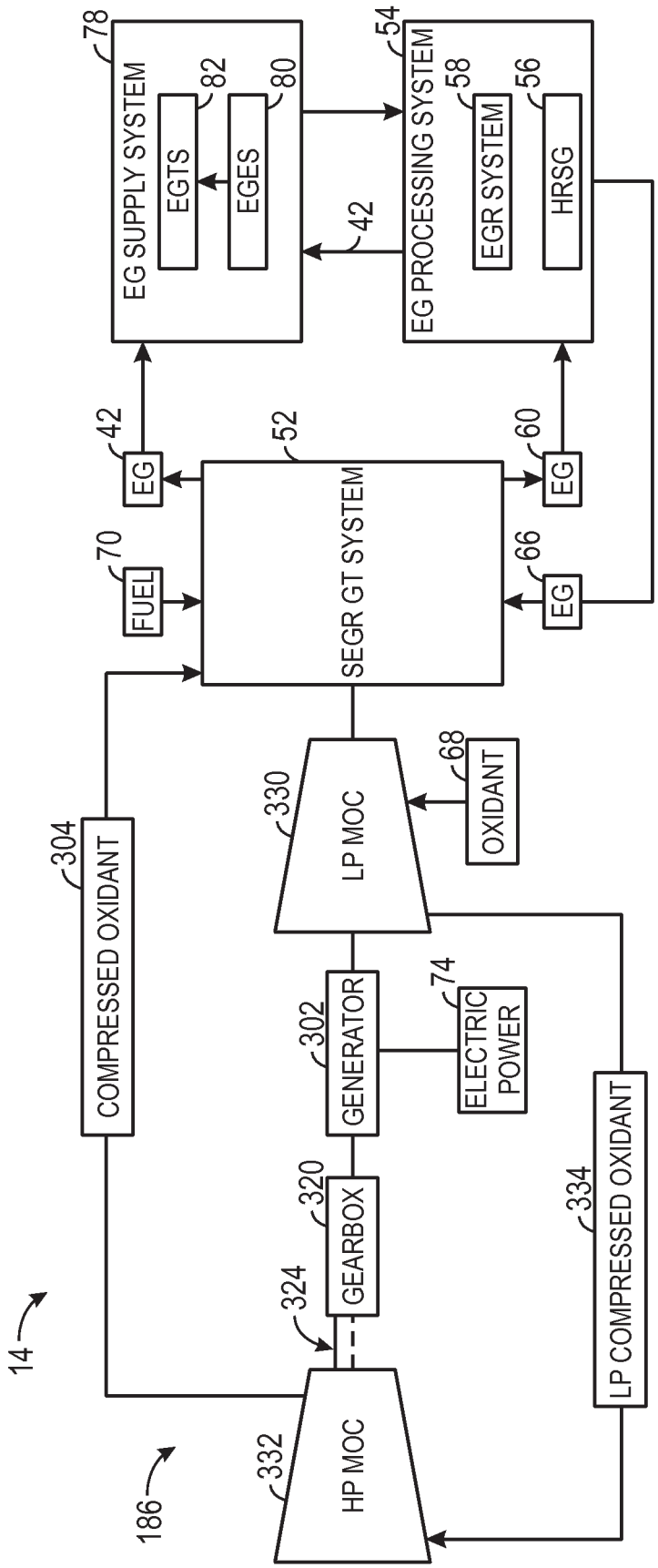
78
EG SUPPLY SYSTEM
EGTS
82
EGES
80
54
EG PROCESSING SYSTEM
58
EGR SYSTEM
56
HRSG
42
42
EG
52
SEGR GT SYSTEM
60
EG
70
FUEL
66
EG
304
COMPRESSED OXIDANT
330
LP MOC
68
OXIDANT
302
GENERATOR
74
ELECTRIC POWER
320
GEARBOX
324
334
LP COMPRESSED OXIDANT
14
186
332
HP MOC

FIG. 10

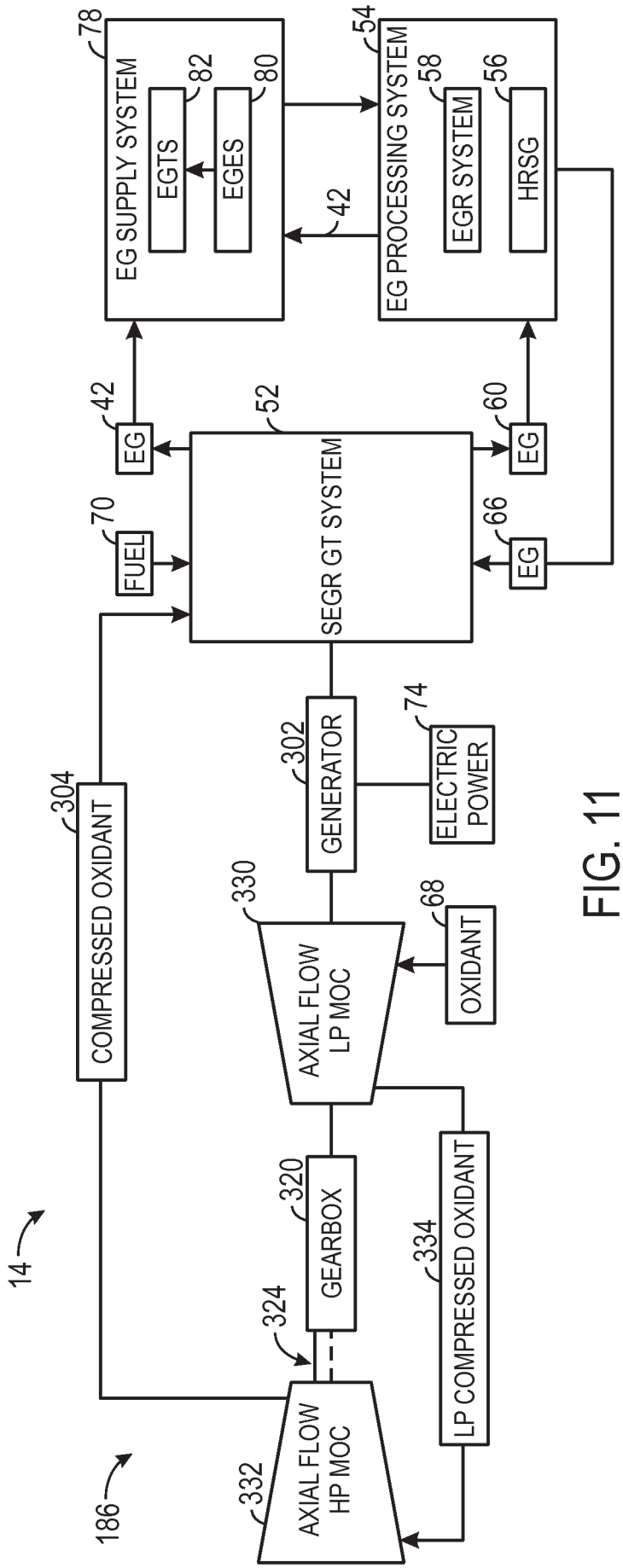
78
EG SUPPLY SYSTEM
EGTS
82
EGES
80
54
EG PROCESSING SYSTEM
58
EGR SYSTEM
56
HRSG
42
42
EG
52
SEGR GT SYSTEM
60
EG
70
FUEL
66
EG
304
COMPRESSED OXIDANT
302
GENERATOR
74
ELECTRIC POWER
330
AXIAL FLOW LP MOC
68
OXIDANT
320
GEARBOX
334
LP COMPRESSED OXIDANT
324
14
186
332
AXIAL FLOW HP MOC

FIG. 11

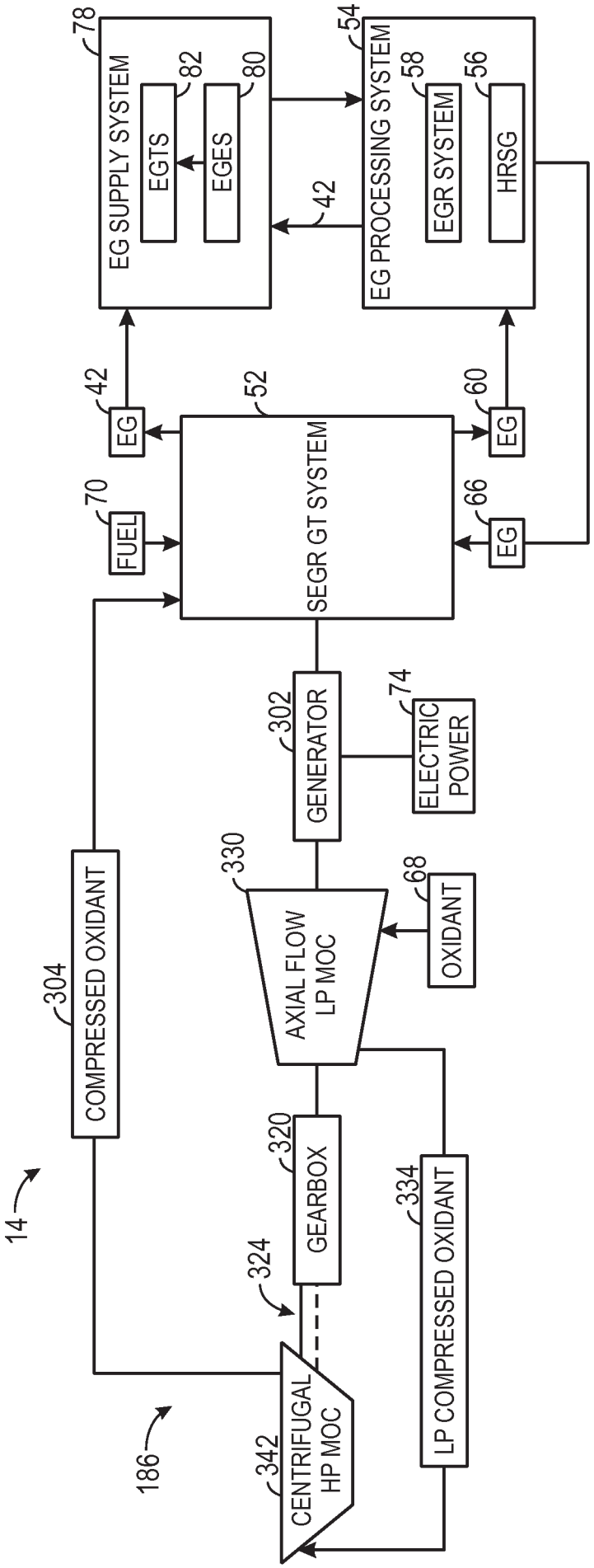
78
EG SUPPLY SYSTEM
EGTS
82
EGES
80
42
54
EG PROCESSING SYSTEM
58
EGR SYSTEM
56
HRSG
42
EG
52
SEGR GT SYSTEM
60
EG
70
FUEL
66
EG
302
GENERATOR
74
ELECTRIC POWER
330
AXIAL FLOW LP MOC
68
OXIDANT
304
COMPRESSED OXIDANT
14
320
GEARBOX
324
334
LP COMPRESSED OXIDANT
186
342
CENTRIFUGAL HP MOC

FIG. 12

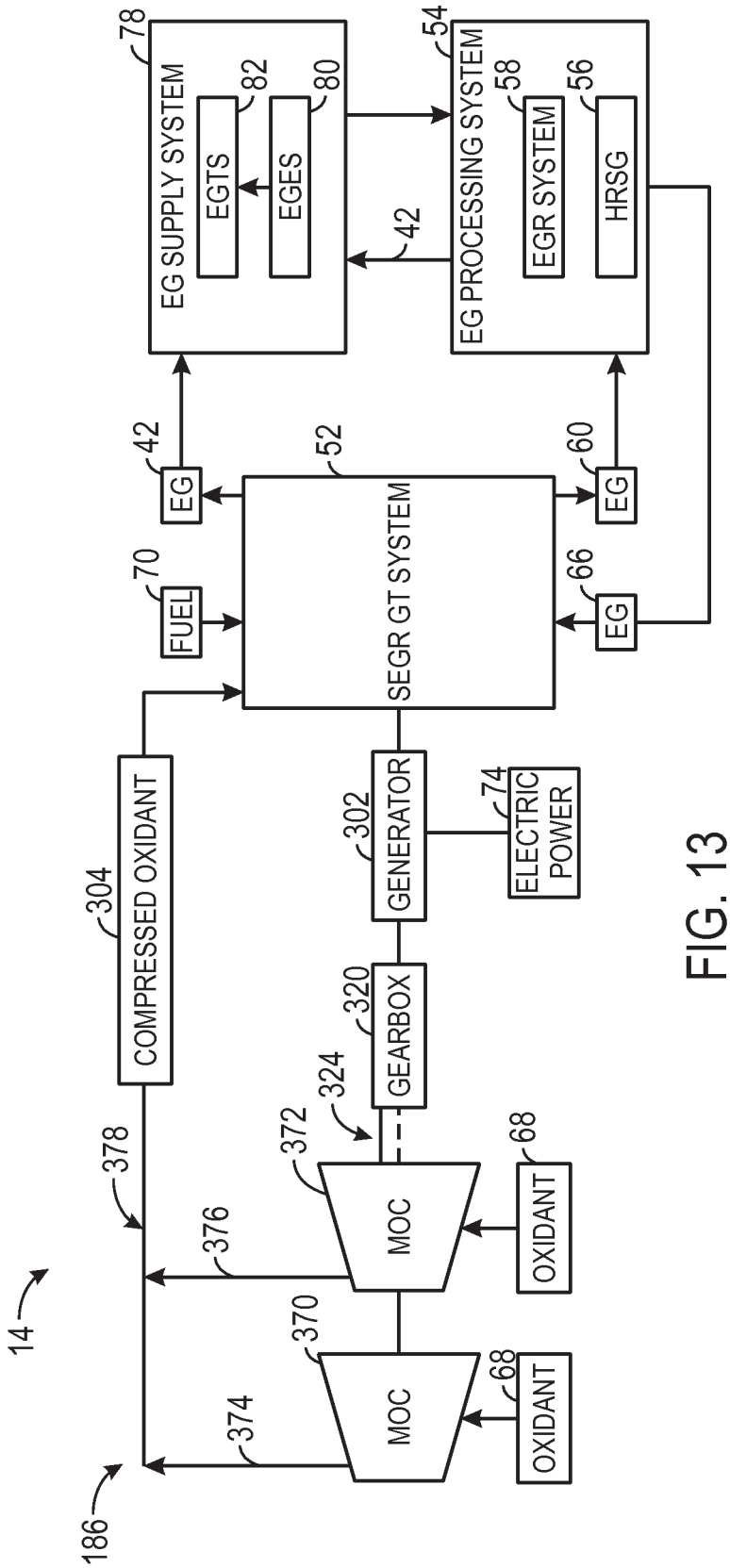
78
EG SUPPLY SYSTEM
EGTS
82
EGES
80
42
54
EG PROCESSING SYSTEM
58
EGR SYSTEM
56
HRSG
42
EG
52
SEGR GT SYSTEM
60
EG
70
FUEL
66
EG
304
COMPRESSED OXIDANT
302
GENERATOR
74
ELECTRIC POWER
320
GEARBOX
324
372
MOC
68
OXIDANT
378
376
14
370
MOC
68
OXIDANT
374
186

FIG. 13

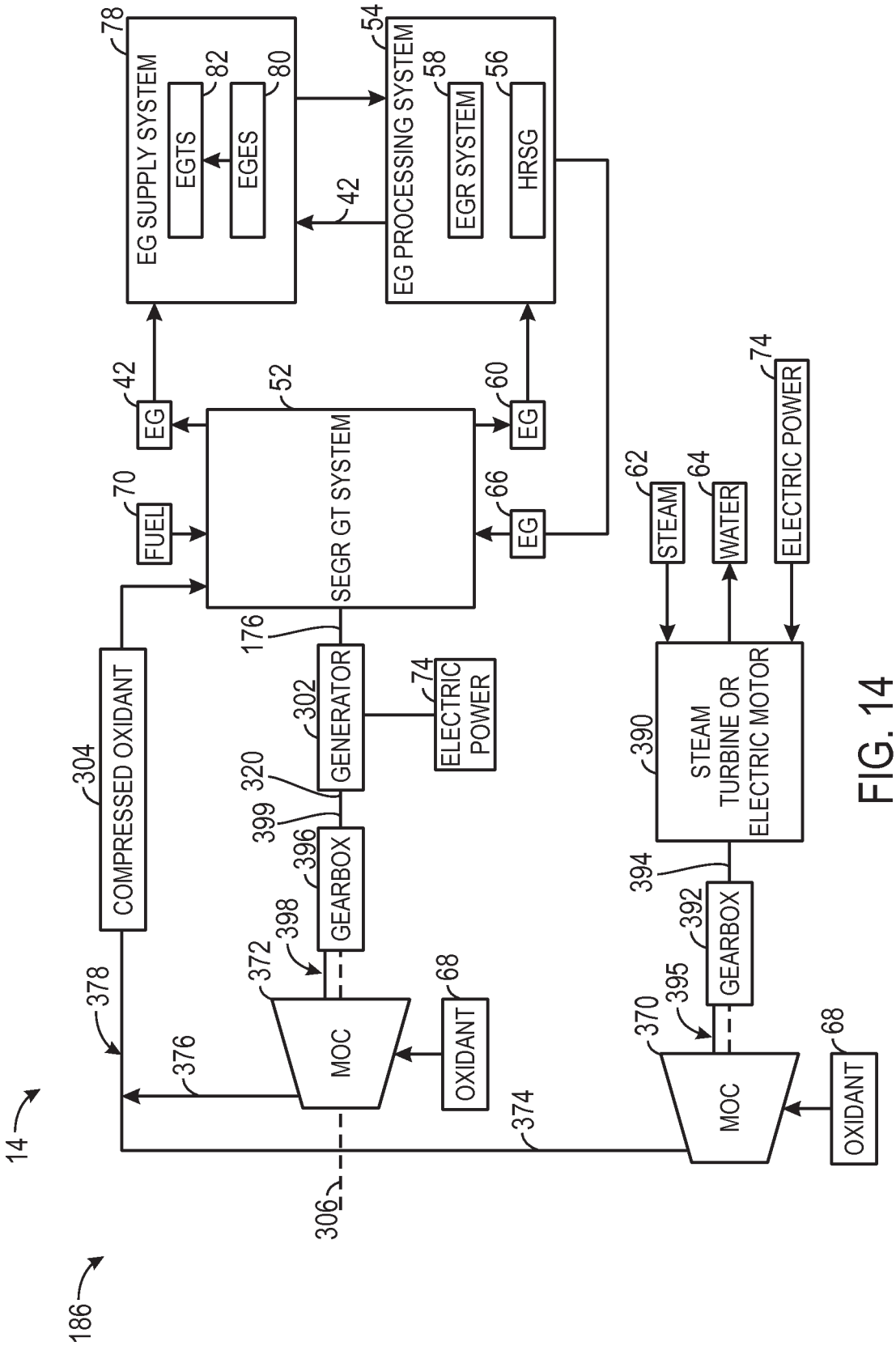
EG SUPPLY SYSTEM
EGTS
EGES
EG PROCESSING SYSTEM
EGR SYSTEM
HRSG
SEGR GT SYSTEM
EG
FUEL
COMPRESSED OXIDANT
GENERATOR
ELECTRIC POWER
GEARBOX
MOC
OXIDANT
STEAM
WATER
STEAM TURBINE OR ELECTRIC MOTOR
78
82
80
54
58
56
42
52
60
70
66
62
64
74
176
302
320
399
396
398
372
68
304
378
376
374
306
14
186
390
394
392
395
370

FIG. 14

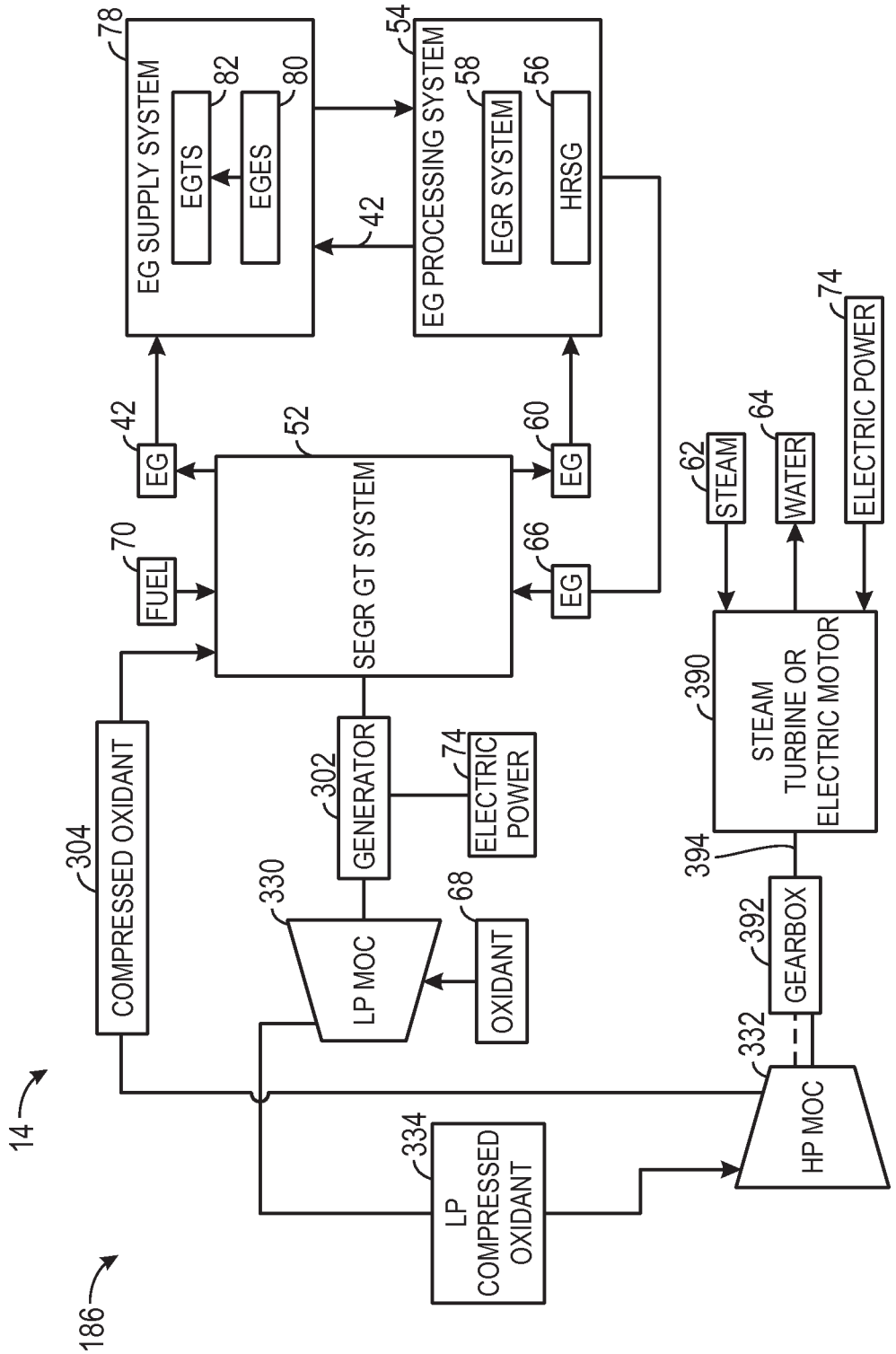
78
EG SUPPLY SYSTEM
EGTS
82
EGES
80
42
54
EG PROCESSING SYSTEM
58
EGR SYSTEM
56
HRSG
42
EG
52
SEGR GT SYSTEM
60
EG
70
FUEL
66
EG
62
STEAM
64
WATER
74
ELECTRIC POWER
390
STEAM TURBINE OR ELECTRIC MOTOR
394
392
GEARBOX
332
HP MOC
304
COMPRESSED OXIDANT
302
GENERATOR
74
ELECTRIC POWER
330
LP MOC
68
OXIDANT
334
LP COMPRESSED OXIDANT
14
186

FIG. 15

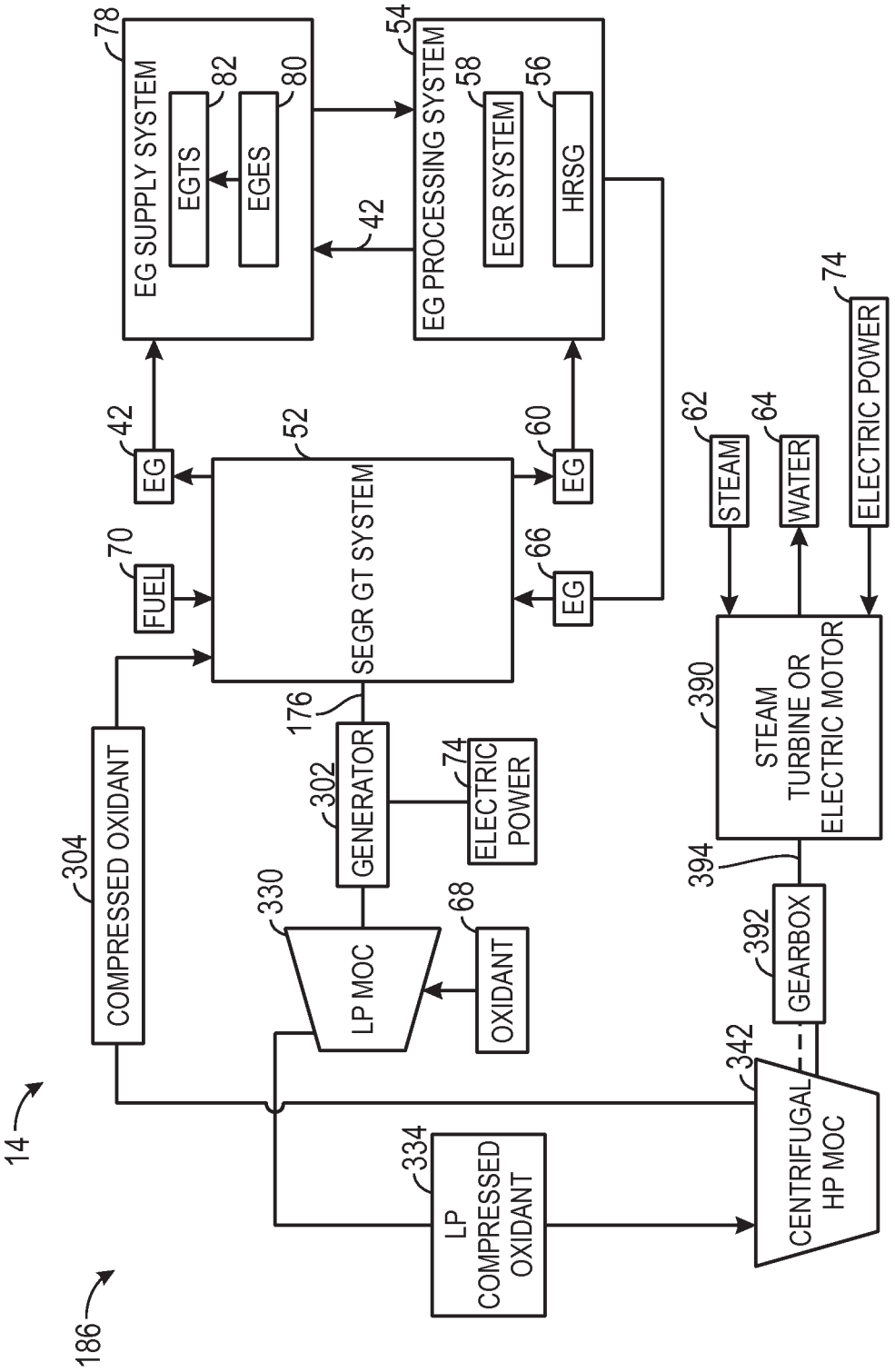
78
EG SUPPLY SYSTEM
EGTS
82
EGES
80
42
54
EG PROCESSING SYSTEM
58
EGR SYSTEM
56
HRSG
42
EG
52
SEGR GT SYSTEM
60
EG
70
FUEL
66
EG
176
302
GENERATOR
74
ELECTRIC POWER
304
COMPRESSED OXIDANT
330
LP MOC
68
OXIDANT
14
334
LP COMPRESSED OXIDANT
186
62
STEAM
64
WATER
74
ELECTRIC POWER
390
STEAM TURBINE OR ELECTRIC MOTOR
394
392
GEARBOX
342
CENTRIFUGAL HP MOC

FIG. 16

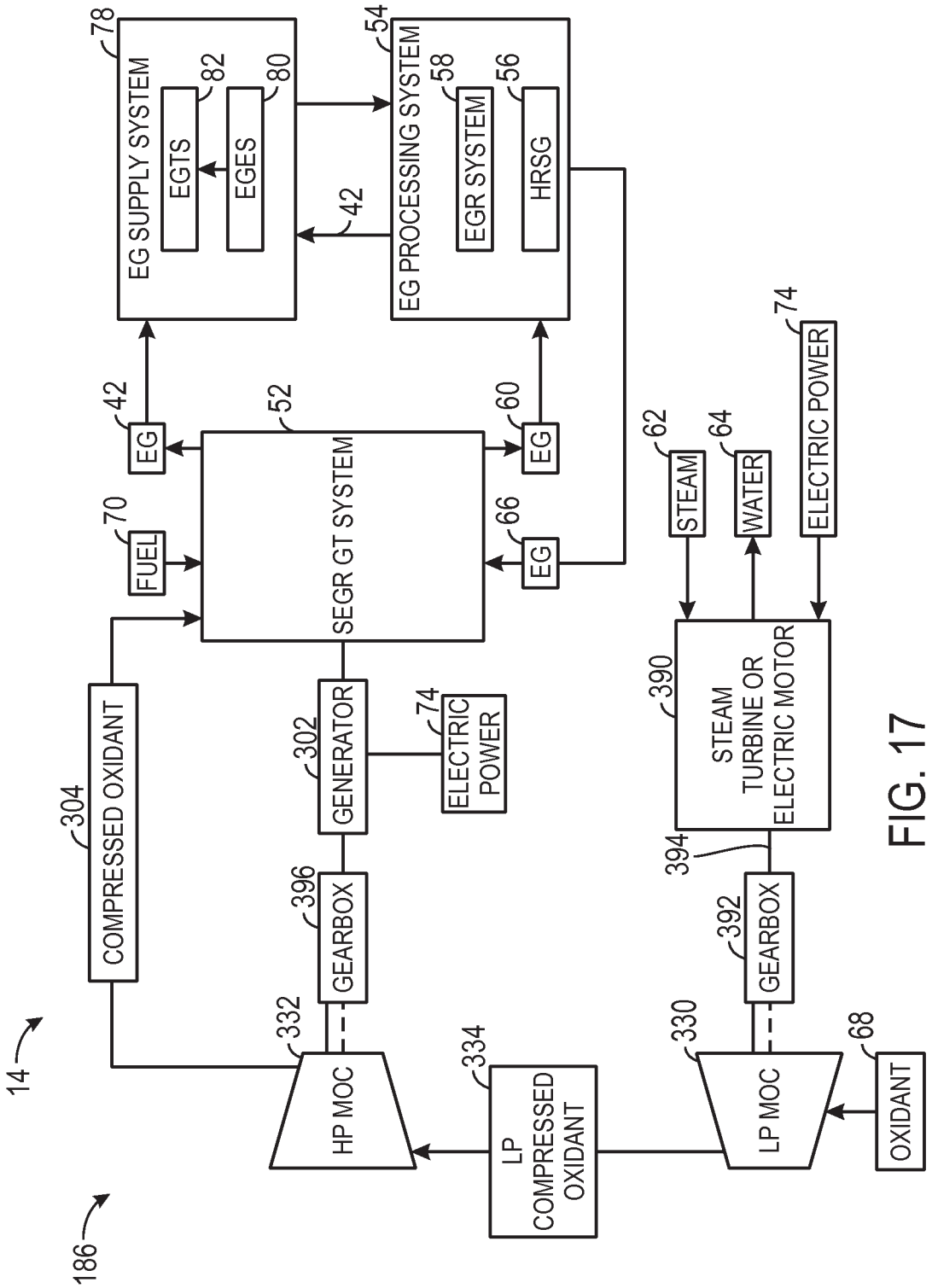
78
EG SUPPLY SYSTEM
EGTS
82
EGES
80
42
54
EG PROCESSING SYSTEM
58
EGR SYSTEM
56
HRSG
42
EG
52
SEGR GT SYSTEM
60
EG
70
FUEL
66
EG
62
STEAM
64
WATER
74
ELECTRIC POWER
304
COMPRESSED OXIDANT
302
GENERATOR
74
ELECTRIC POWER
390
STEAM TURBINE OR ELECTRIC MOTOR
394
396
GEARBOX
392
GEARBOX
14
332
HP MOC
334
LP COMPRESSED OXIDANT
330
LP MOC
68
OXIDANT
186

FIG. 17

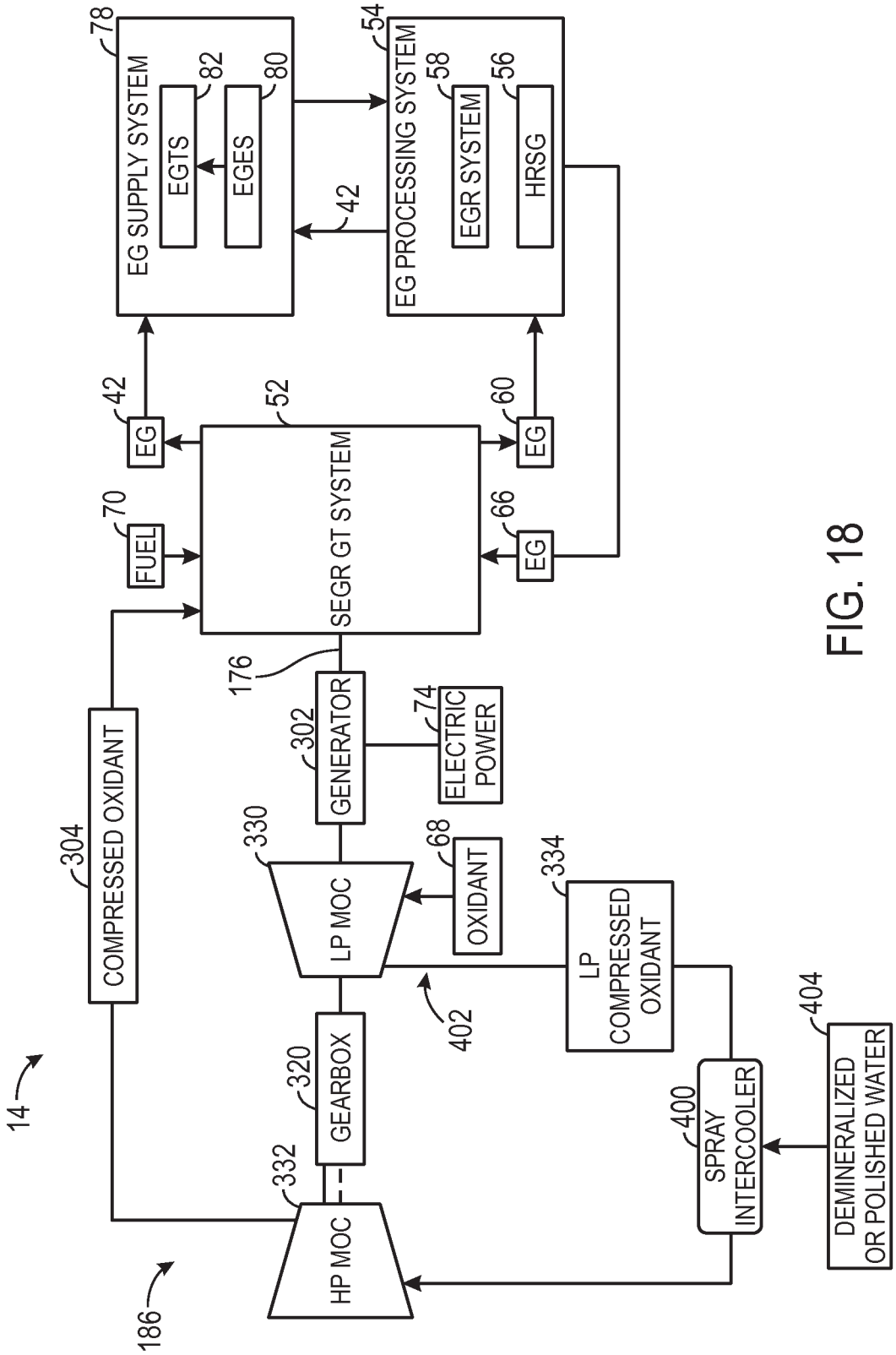
78
EG SUPPLY SYSTEM
EGTS
82
EGES
80
42
54
EG PROCESSING SYSTEM
58
EGR SYSTEM
56
HRSG
42
EG
52
SEGR GT SYSTEM
60
EG
70
FUEL
66
EG
176
302
GENERATOR
74
ELECTRIC POWER
304
COMPRESSED OXIDANT
330
LP MOC
68
OXIDANT
334
LP COMPRESSED OXIDANT
402
14
320
GEARBOX
400
SPRAY INTERCOOLER
404
DEMINERALIZED OR POLISHED WATER
332
HP MOC
186

FIG. 18

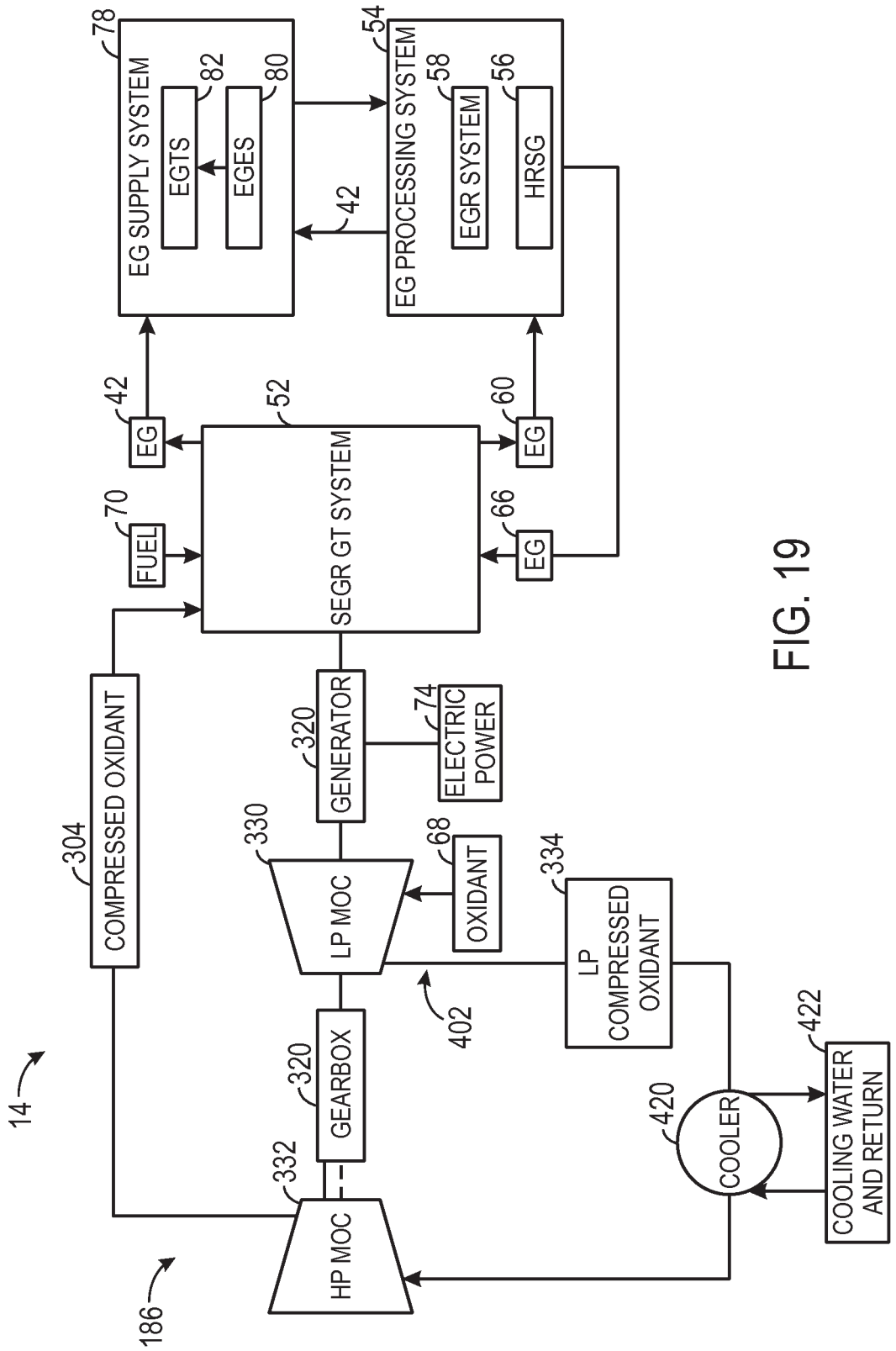
78
EG SUPPLY SYSTEM
EGTS
82
EGES
80
54
EG PROCESSING SYSTEM
58
EGR SYSTEM
56
HRSG
42
42
EG
52
SEGR GT SYSTEM
60
EG
70
FUEL
66
EG
304
COMPRESSED OXIDANT
320
GENERATOR
74
ELECTRIC POWER
330
LP MOC
68
OXIDANT
334
LP COMPRESSED OXIDANT
402
14
320
GEARBOX
332
HP MOC
420
COOLER
422
COOLING WATER AND RETURN
186

FIG. 19

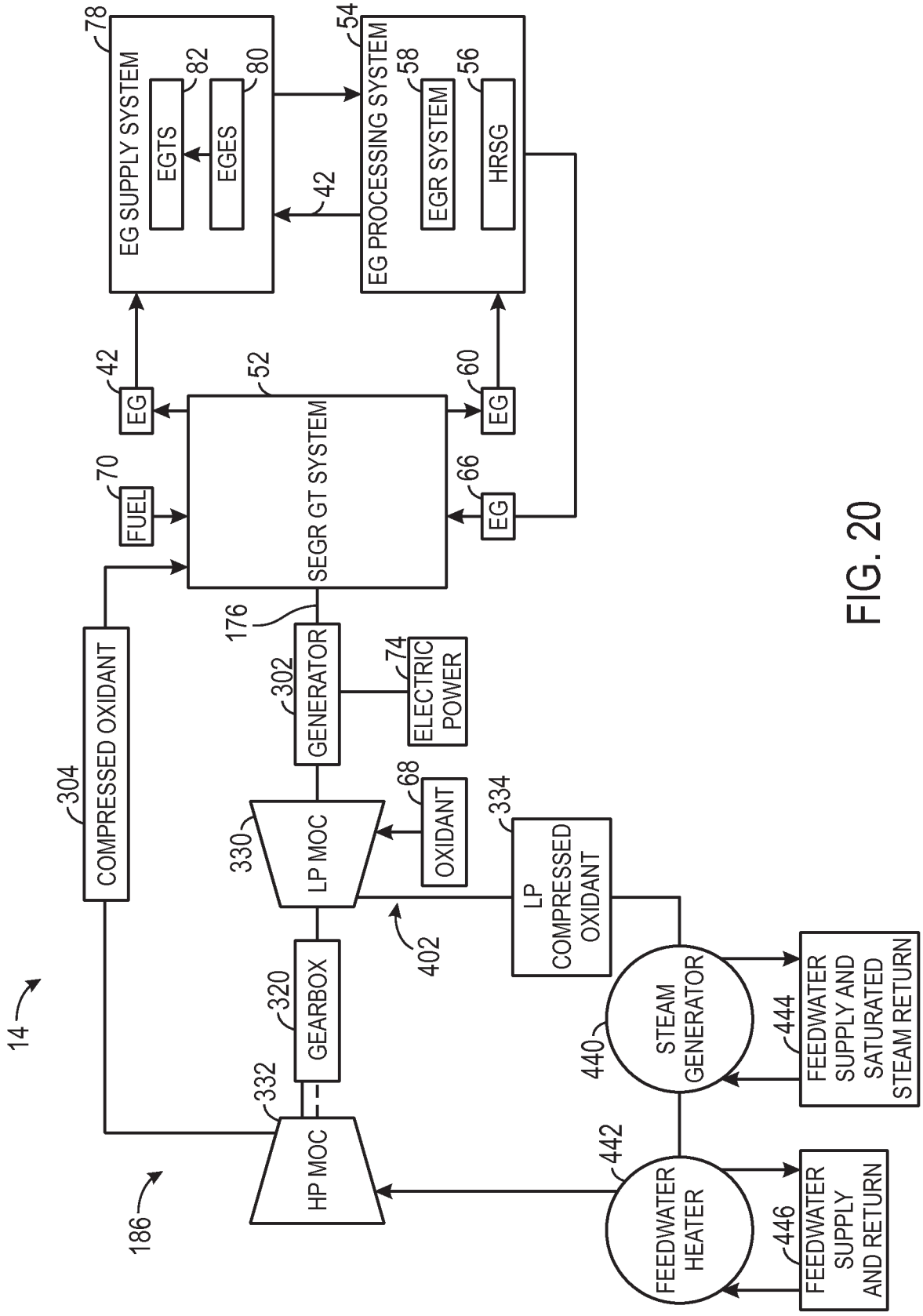
78
EG SUPPLY SYSTEM
EGTS
82
EGES
80
42
54
EG PROCESSING SYSTEM
58
EGR SYSTEM
56
HRSG
42
EG
52
SEGR GT SYSTEM
60
EG
70
FUEL
66
EG
176
302
GENERATOR
74
ELECTRIC POWER
304
COMPRESSED OXIDANT
330
LP MOC
68
OXIDANT
334
LP COMPRESSED OXIDANT
402
14
320
GEARBOX
332
HP MOC
186
440
STEAM GENERATOR
444
FEEDWATER SUPPLY AND SATURATED STEAM RETURN
442
FEEDWATER HEATER
446
FEEDWATER SUPPLY AND RETURN

FIG. 20

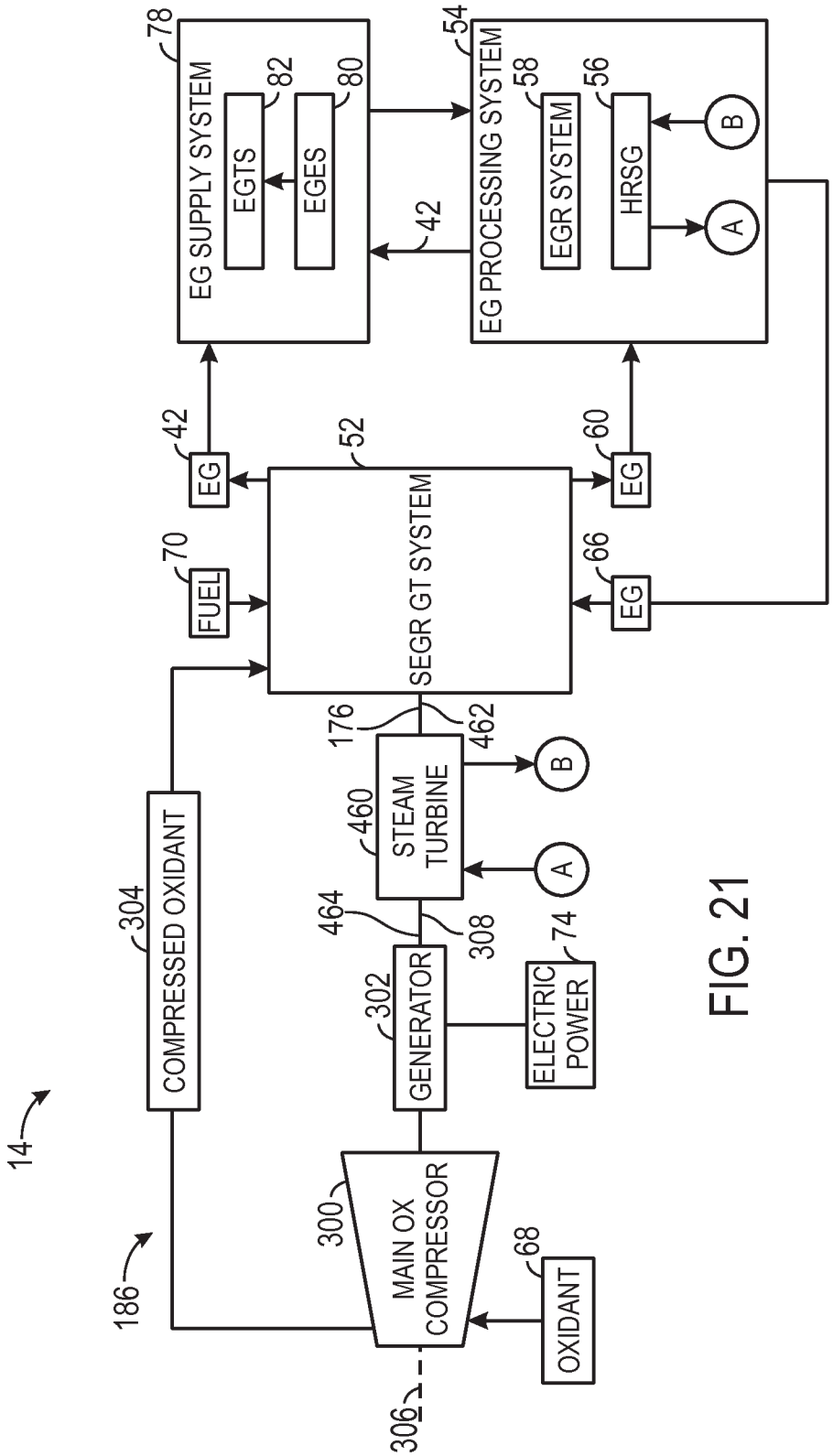
14
186
COMPRESSED OXIDANT
304
FUEL
70
EG
42
EG SUPPLY SYSTEM
78
EGTS
82
EGES
80
42
EG PROCESSING SYSTEM
54
EGR SYSTEM
58
HRSG
56
A
B
SEGR GT SYSTEM
52
EG
60
EG
66
176
462
STEAM TURBINE
460
B
A
464
308
GENERATOR
302
ELECTRIC POWER
74
MAIN OX COMPRESSOR
300
OXIDANT
68
306

FIG. 21

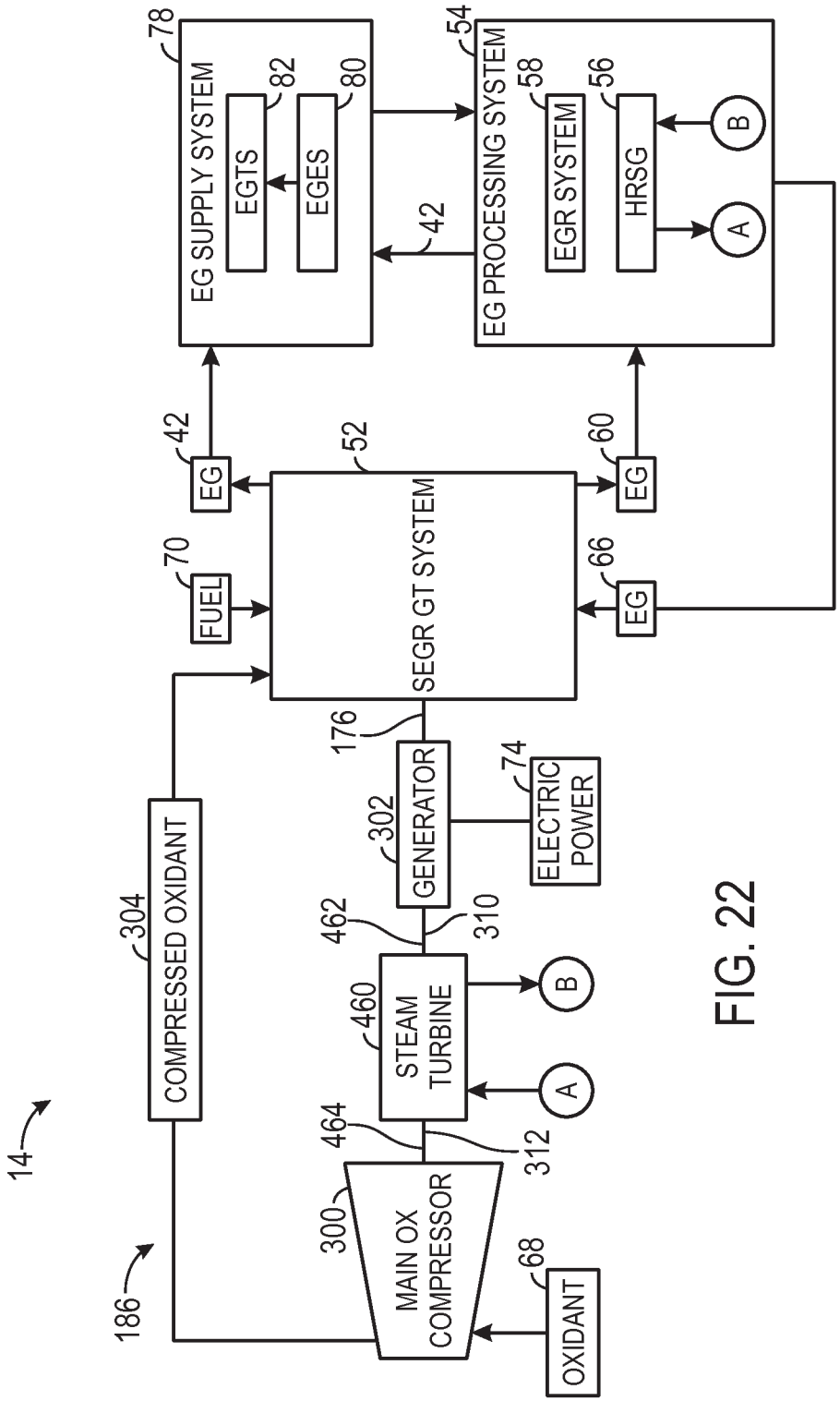
14
186
COMPRESSED OXIDANT
304
FUEL
70
EG
42
EG SUPPLY SYSTEM
78
EGTS
82
EGES
80
42
EG PROCESSING SYSTEM
54
EGR SYSTEM
58
HRSG
56
A
B
SEGR GT SYSTEM
52
EG
66
EG
60
176
GENERATOR
302
ELECTRIC POWER
74
462
310
STEAM TURBINE
460
A
B
464
312
MAIN OX COMPRESSOR
300
OXIDANT
68

FIG. 22

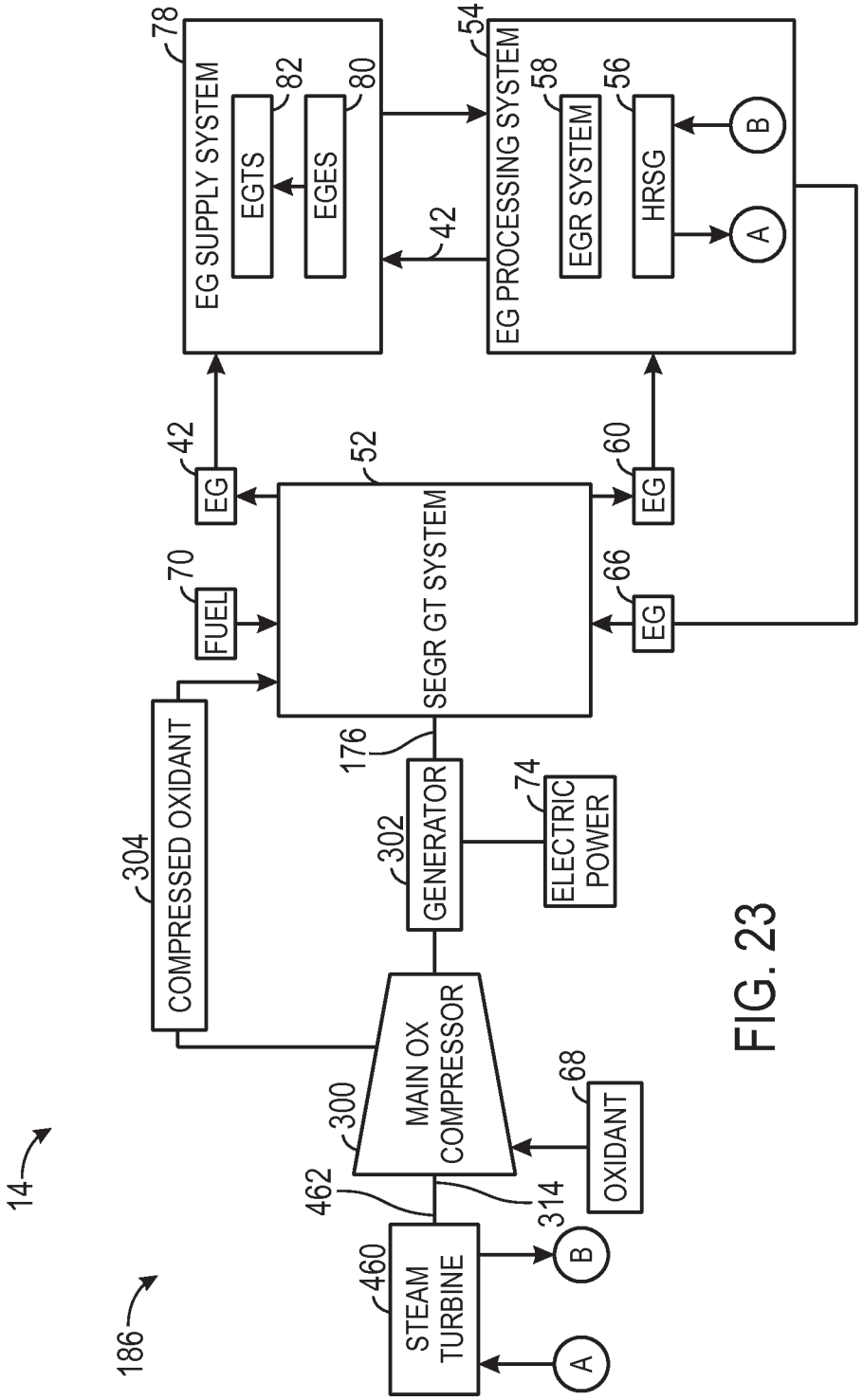
78
EG SUPPLY SYSTEM
EGTS
82
EGES
80
42
54
EG PROCESSING SYSTEM
58
EGR SYSTEM
56
HRSG
B
A
42
EG
52
SEGR GT SYSTEM
60
EG
70
FUEL
66
EG
176
304
COMPRESSED OXIDANT
302
GENERATOR
74
ELECTRIC POWER
300
MAIN OX COMPRESSOR
68
OXIDANT
462
314
460
STEAM TURBINE
B
A
14
186

FIG. 23

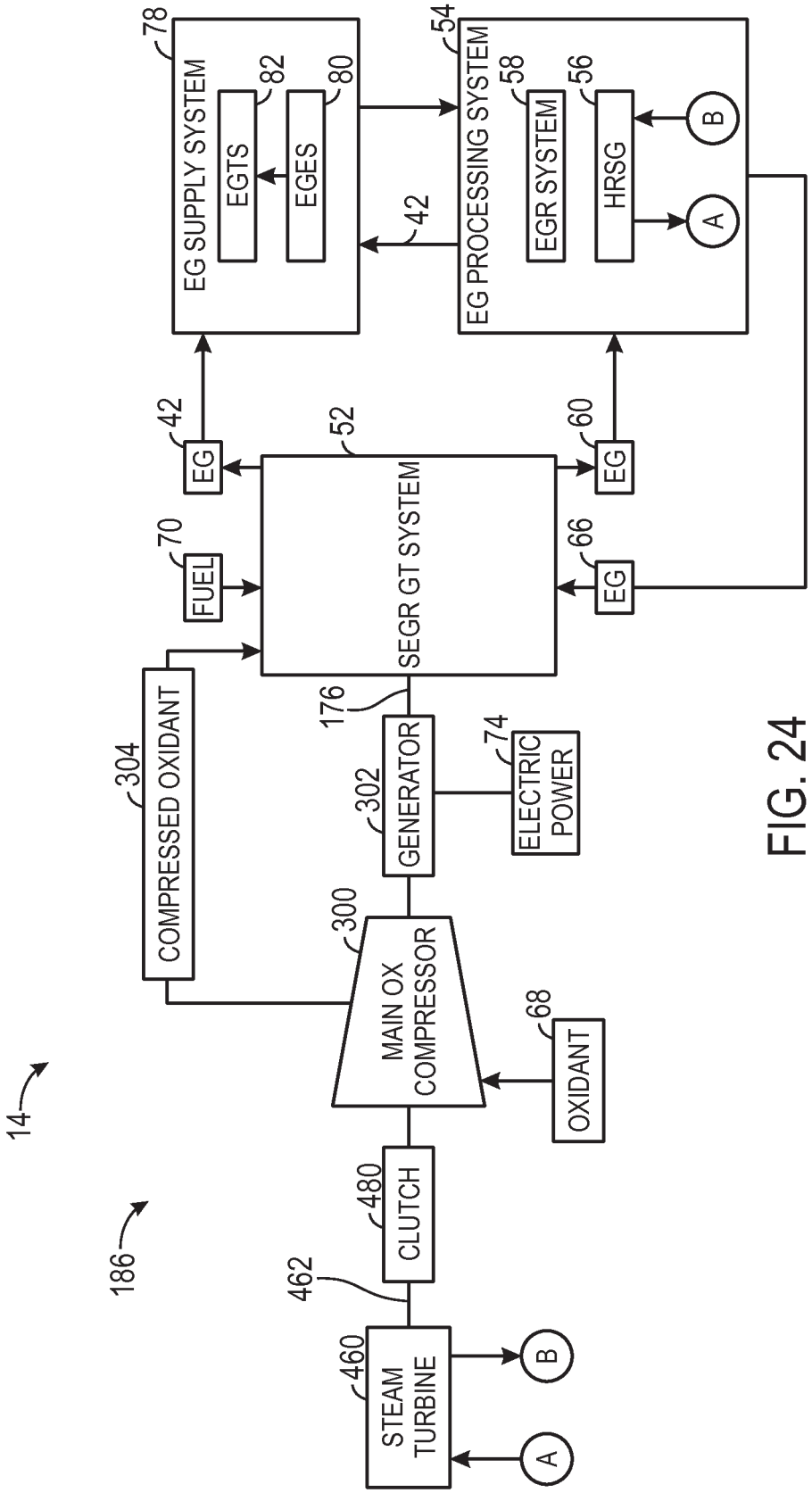
78
EG SUPPLY SYSTEM
EGTS
82
EGES
80
42
54
EG PROCESSING SYSTEM
58
EGR SYSTEM
56
HRSG
B
A
42
EG
52
SEGR GT SYSTEM
60
EG
70
FUEL
66
EG
304
COMPRESSED OXIDANT
176
302
GENERATOR
74
ELECTRIC POWER
300
MAIN OX COMPRESSOR
68
OXIDANT
14
186
480
CLUTCH
462
460
STEAM TURBINE
B
A

FIG. 24