FIG.1

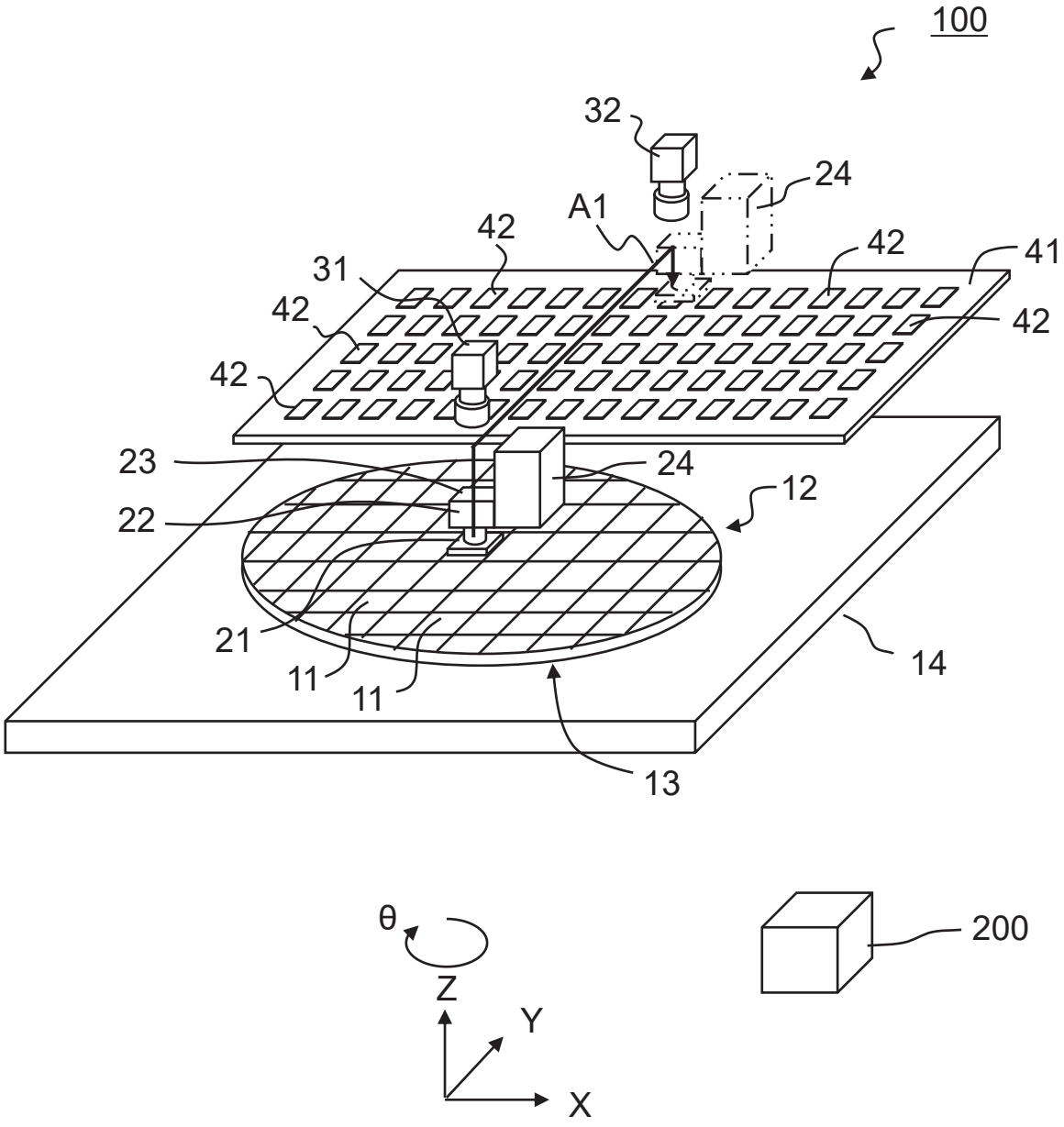

FIG.2

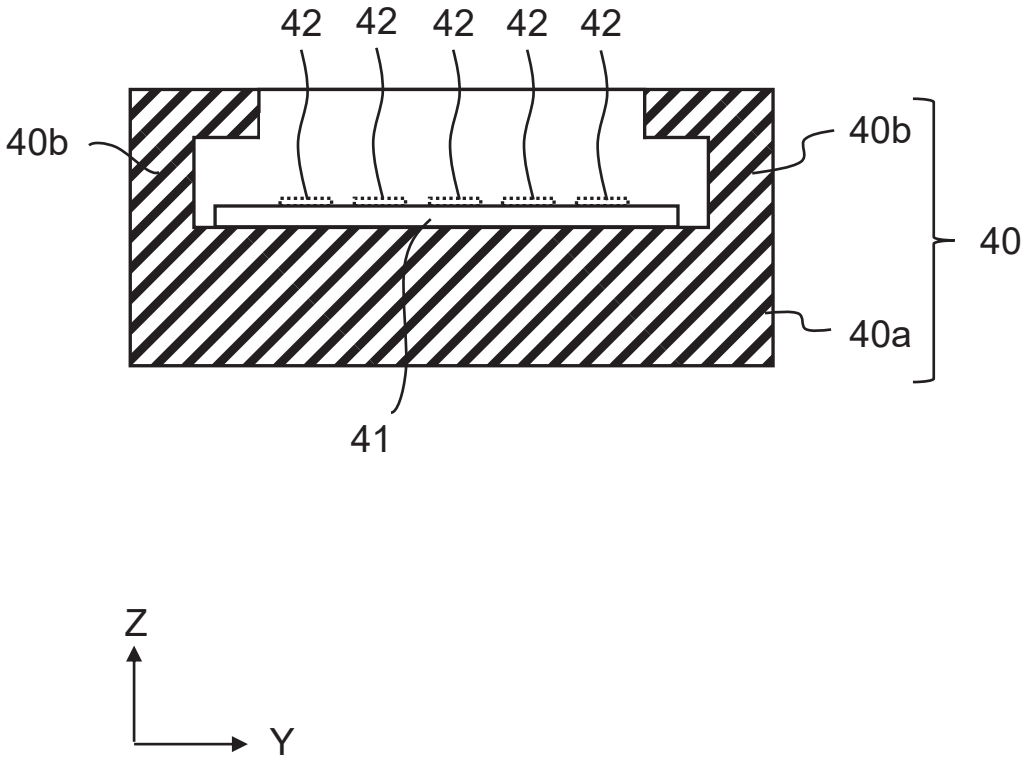

FIG.3

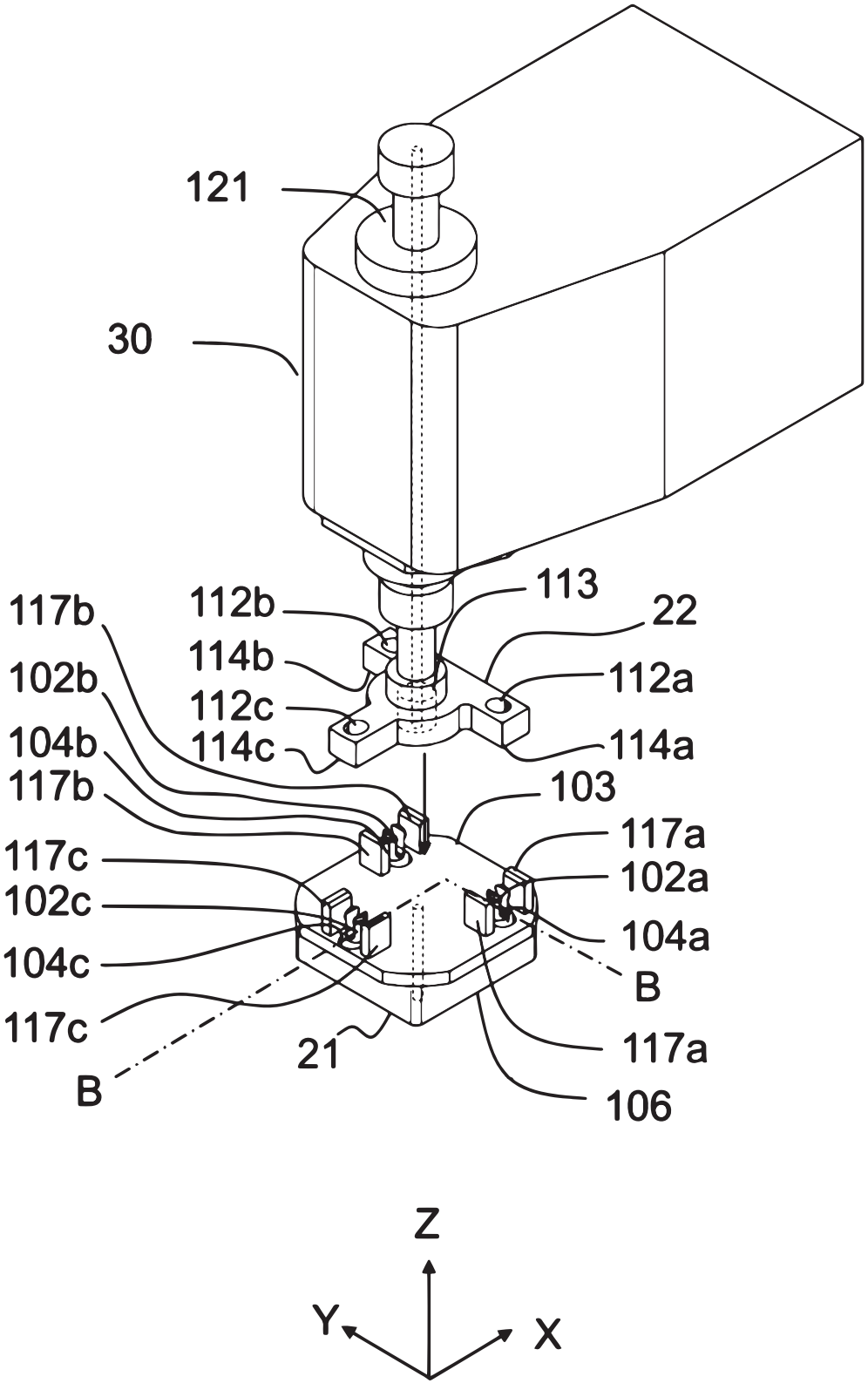
121
30
112b
113
22
117b
114b
112a
102b
112c
114c
114a
104b
117b
103
117a
117c
102a
102c
104a
104c
B
117c
21
117a
B
106
Z
Y
X

FIG.4

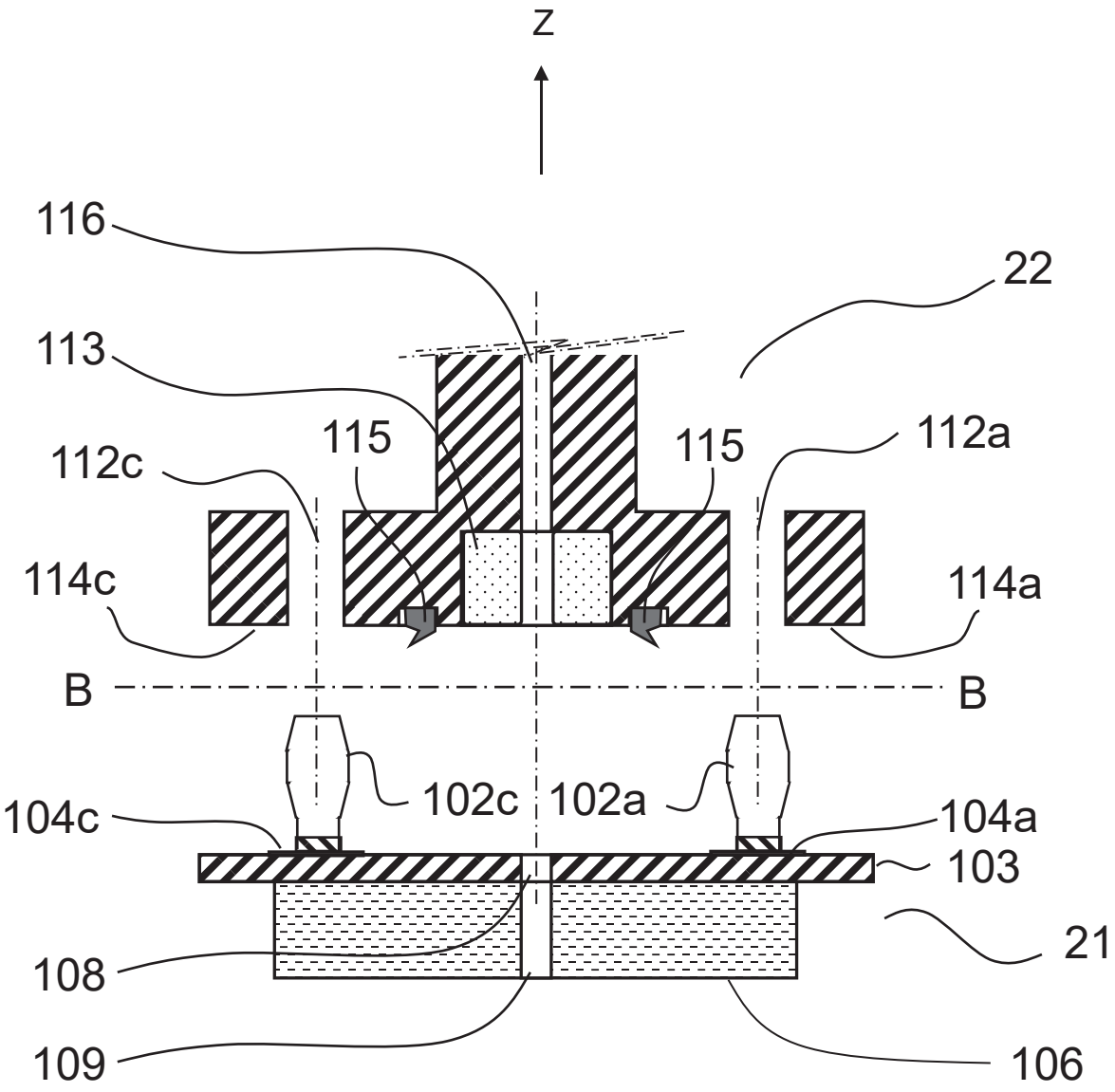
Z
116
22
113
115
115
112a
112c
114c
114a
B
B
102c
102a
104c
104a
103
21
108
109
106

FIG.5A

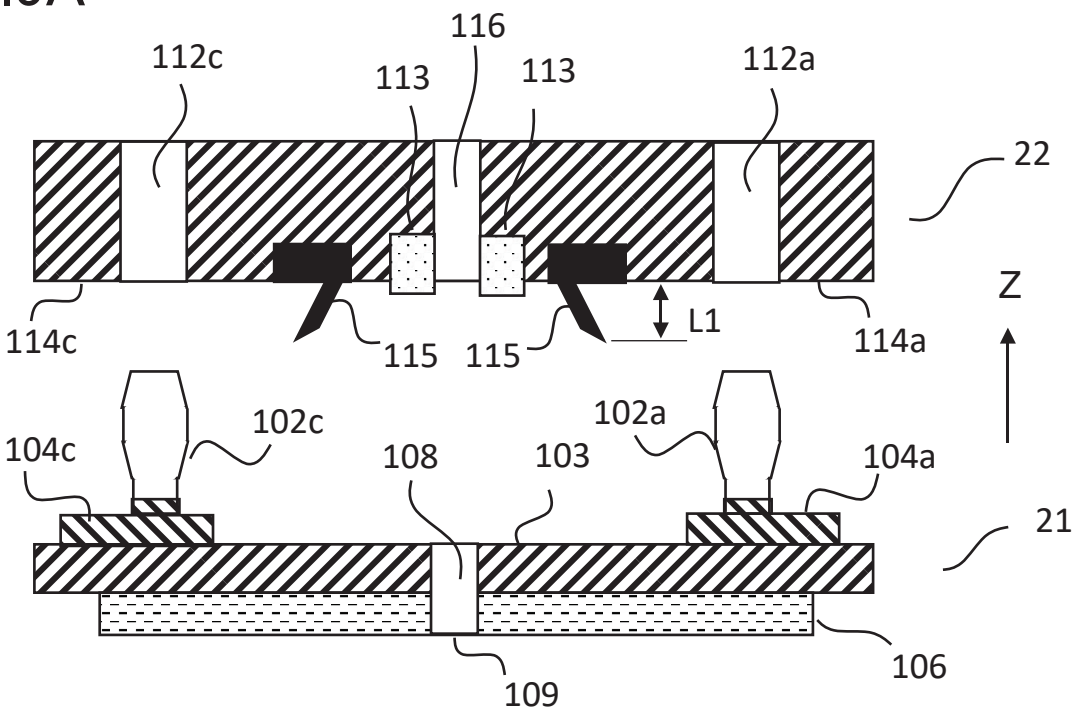

FIG.5B

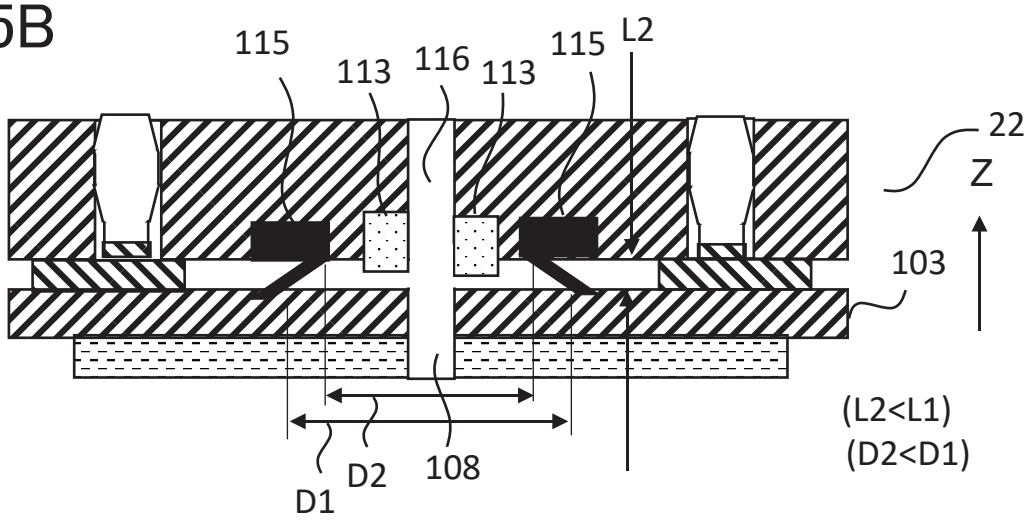

FIG.5C

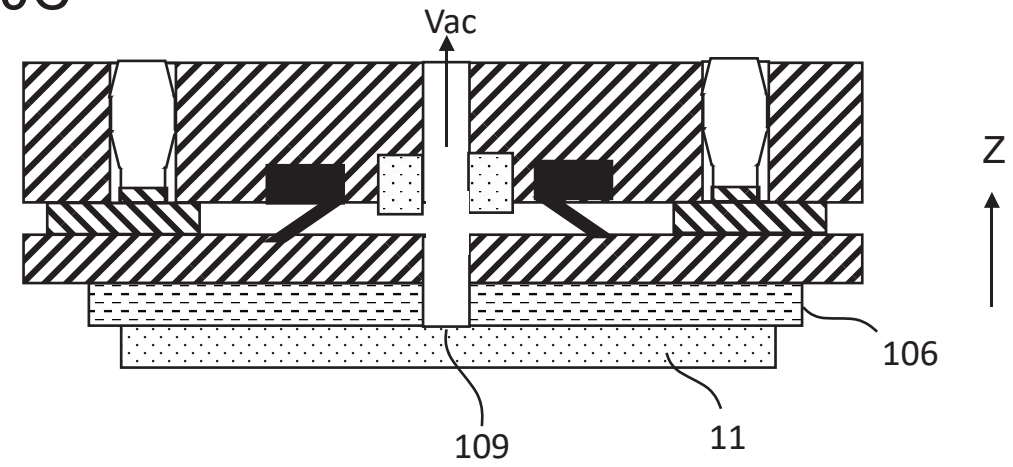

FIG.6

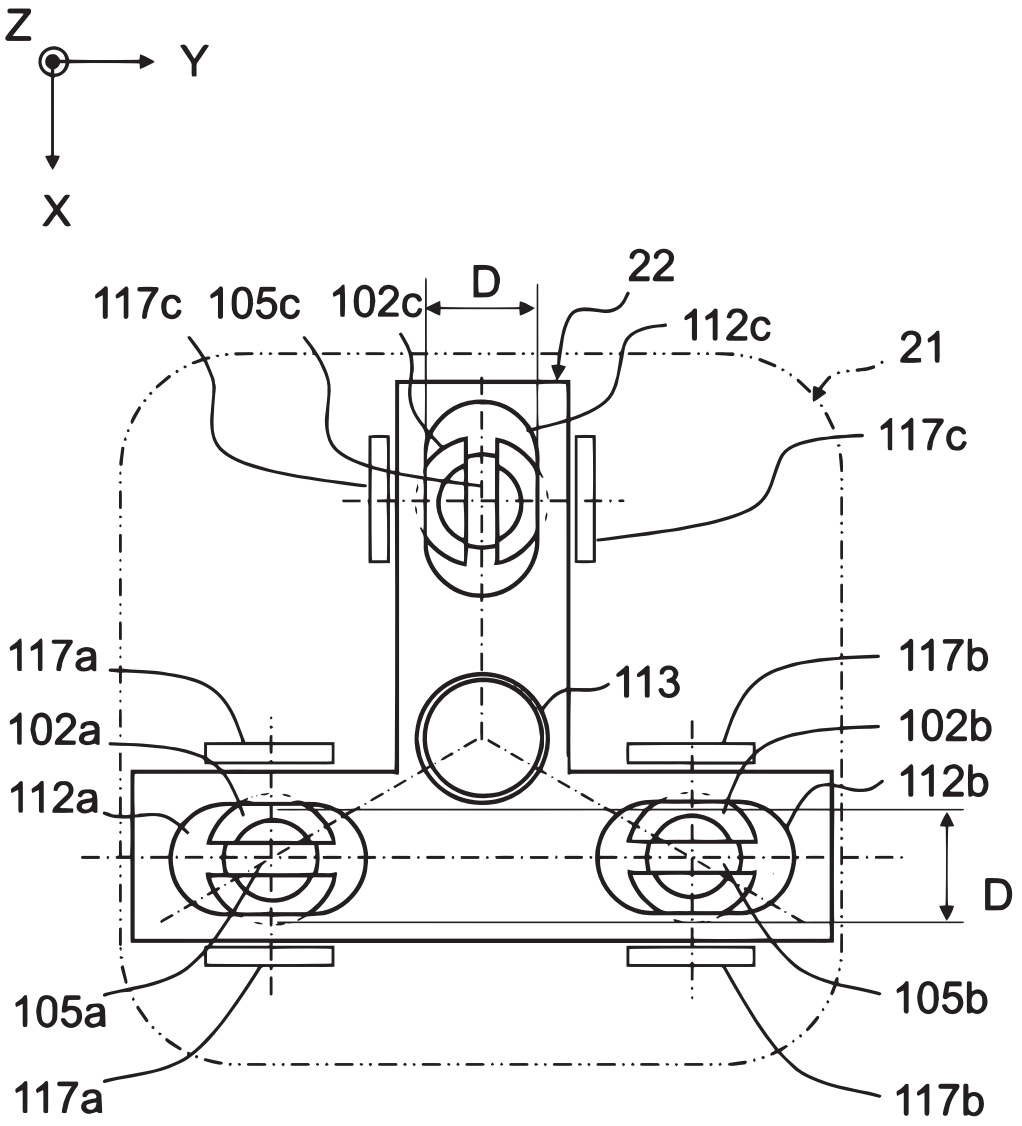
Z
Y
X
117c
105c
102c
D
22
112c
21
117c
117a
113
117b
102a
102b
112a
112b
D
105a
105b
117a
117b

FIG.7A

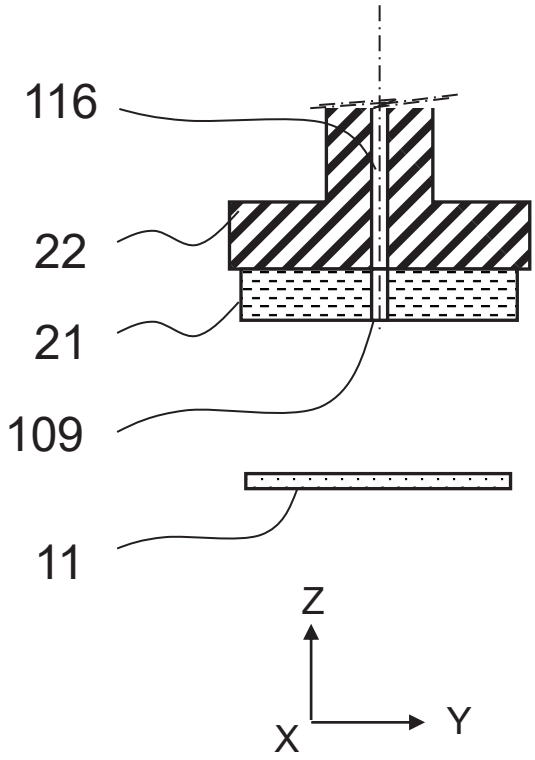

FIG.7B

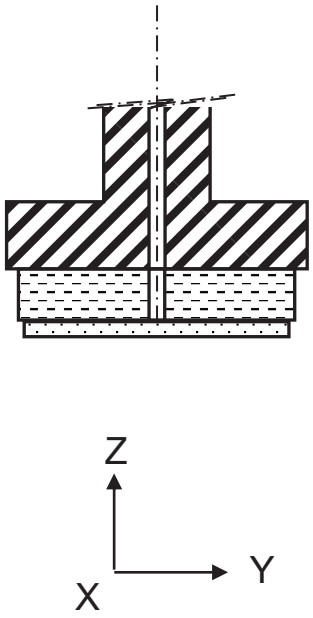

FIG.7C

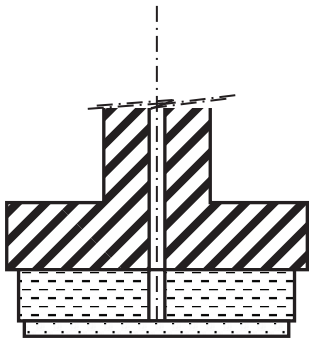

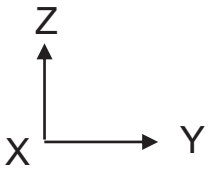

FIG.8A

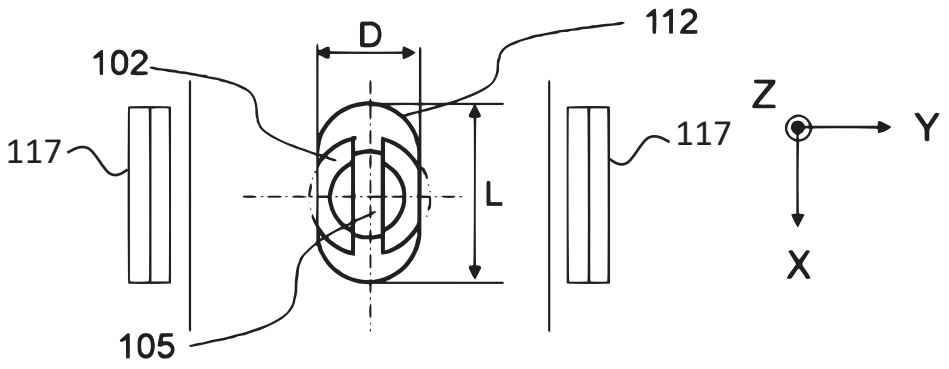
D
112
102
117
117
L
Z
Y
X
105

FIG.8B

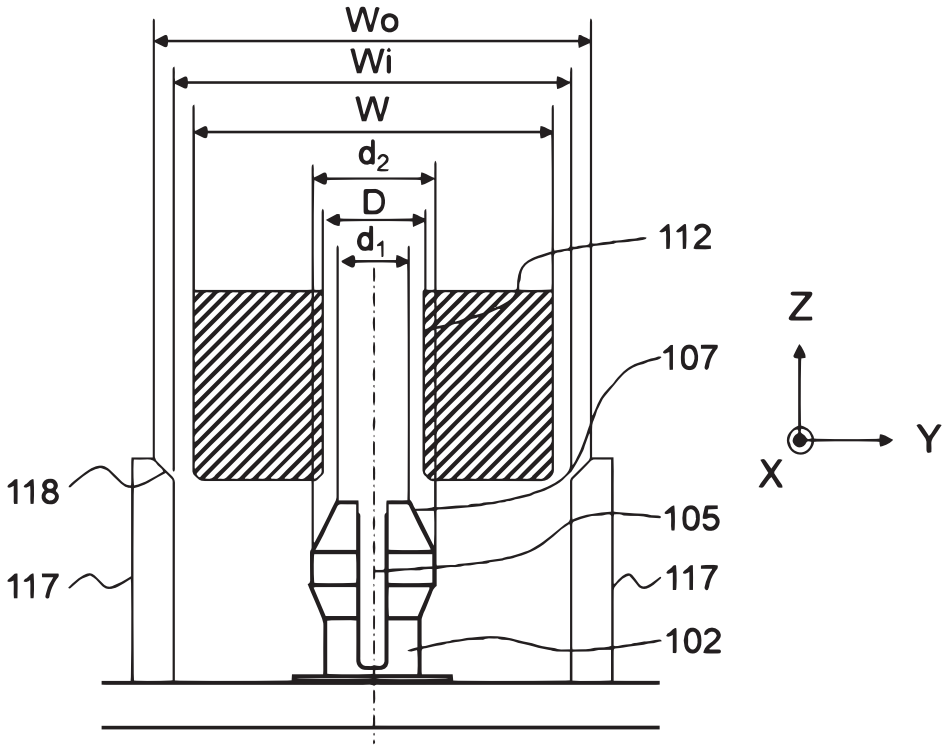
Wo
Wi
W
d_2
D
d_1
112
107
Z
Y
X
118
105
117
117
102

FIG.9A

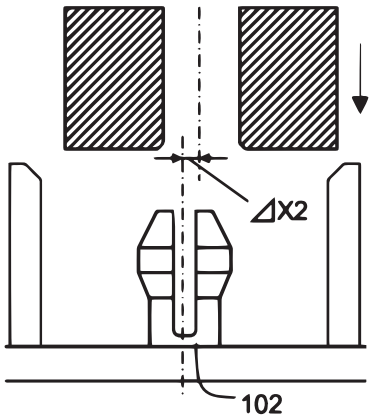

FIG.9B

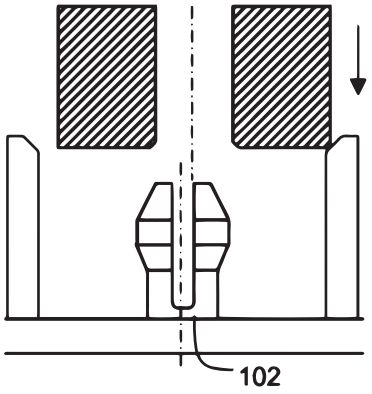

FIG.9C

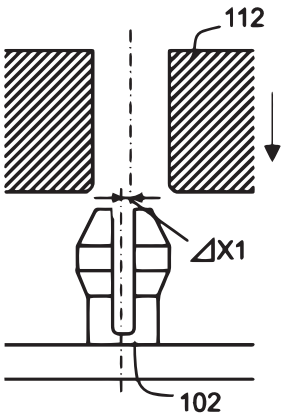

FIG.9D

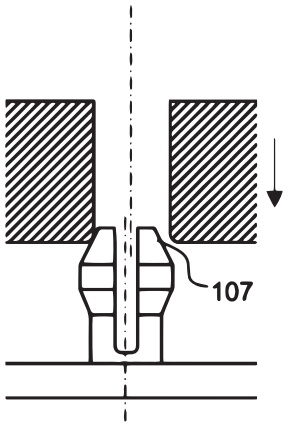

FIG.9E

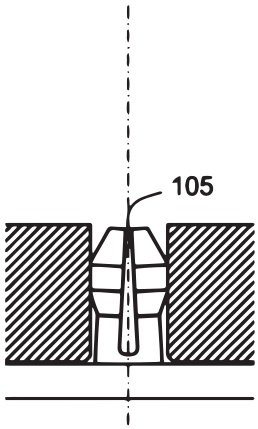

FIG.10

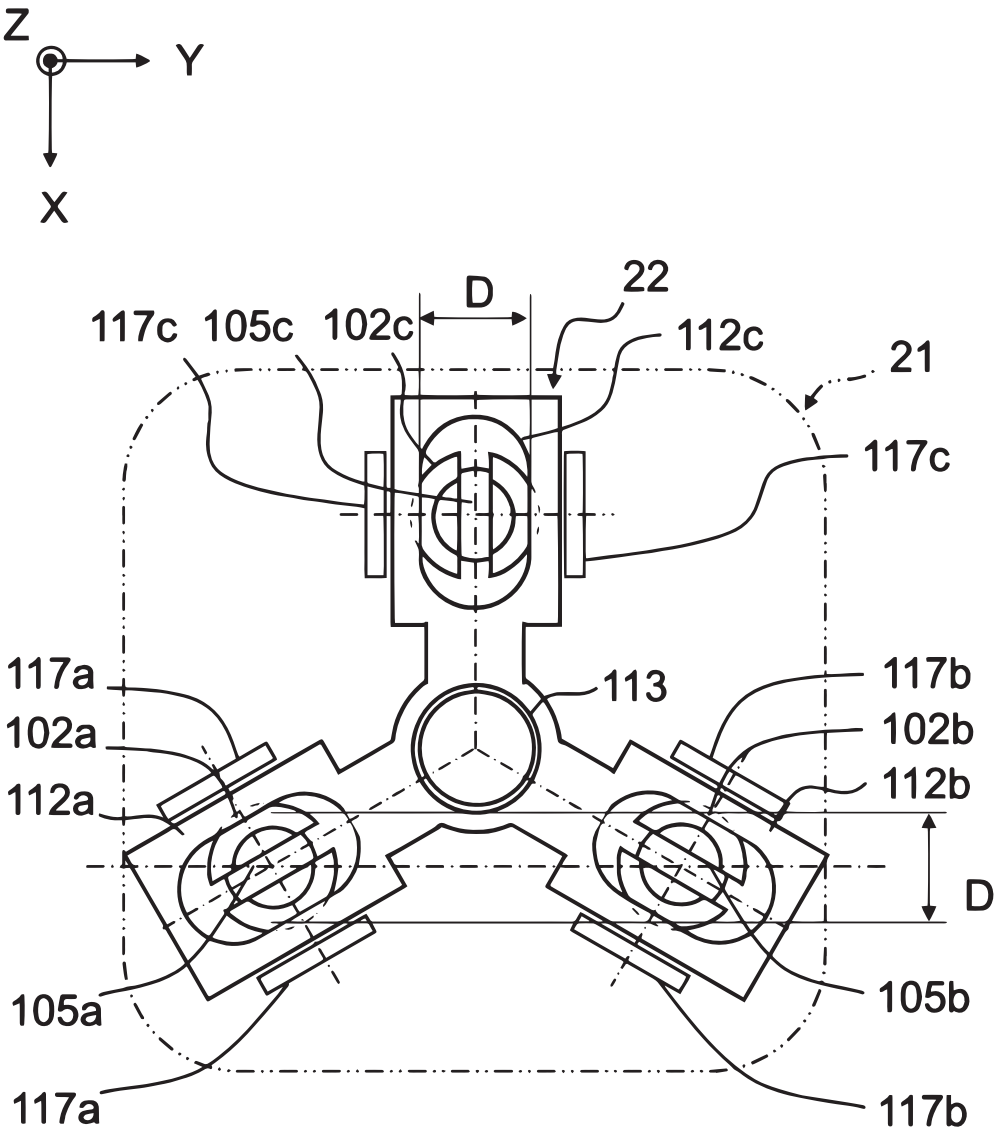
Z
Y
X
D
22
117c
105c
102c
112c
21
117c
117a
113
117b
102a
102b
112a
112b
D
105a
105b
117a
117b

FIG.11A

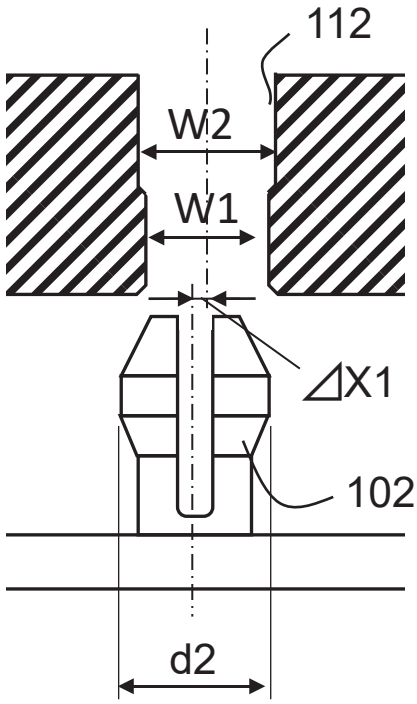

FIG.11B

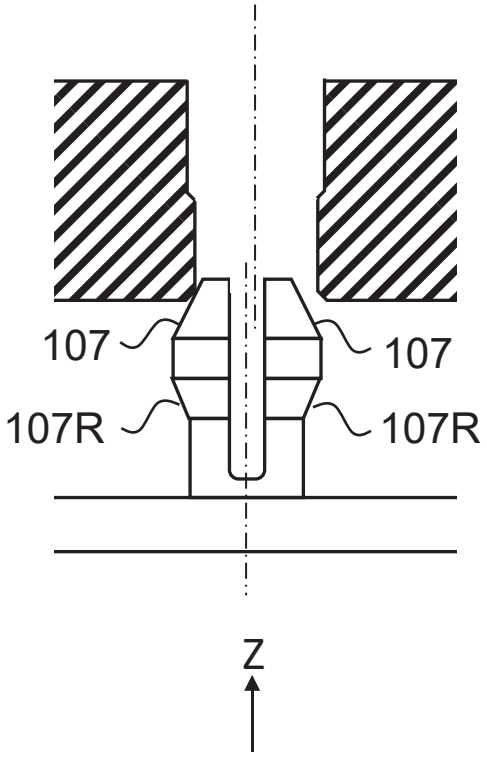

FIG.11C

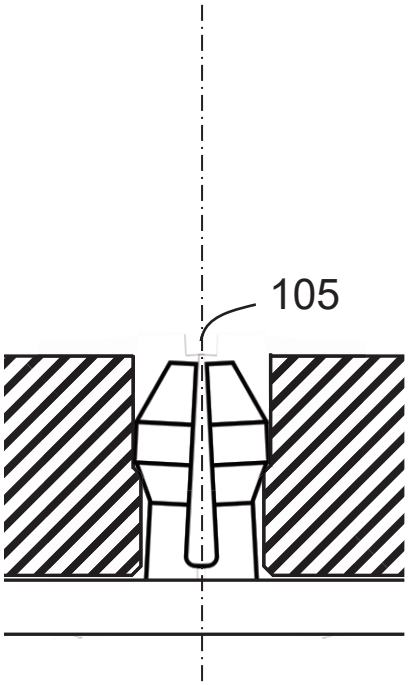

FIG.12A

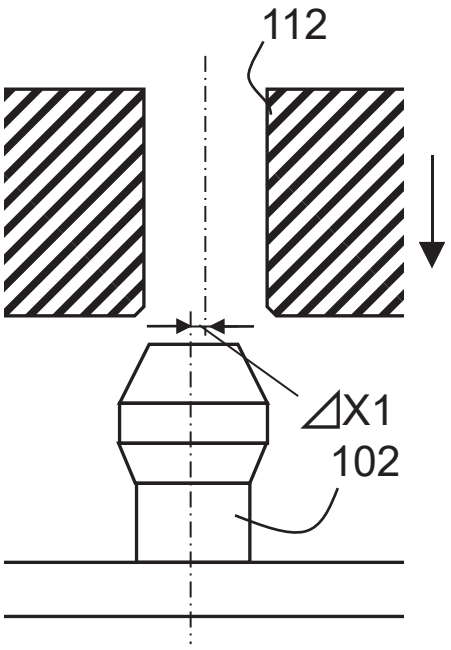

FIG.12B

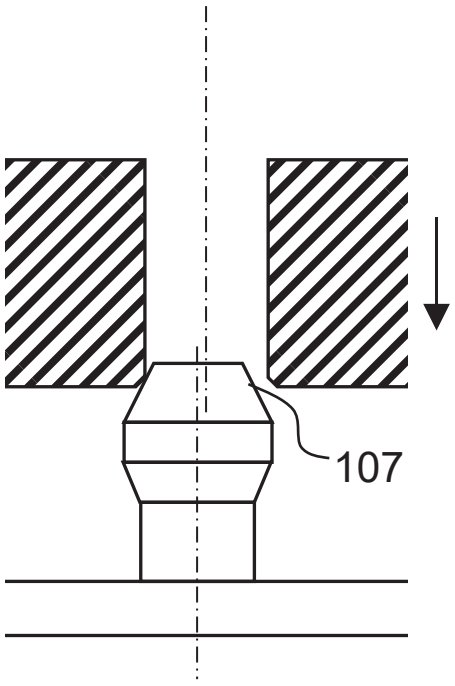

FIG.12C

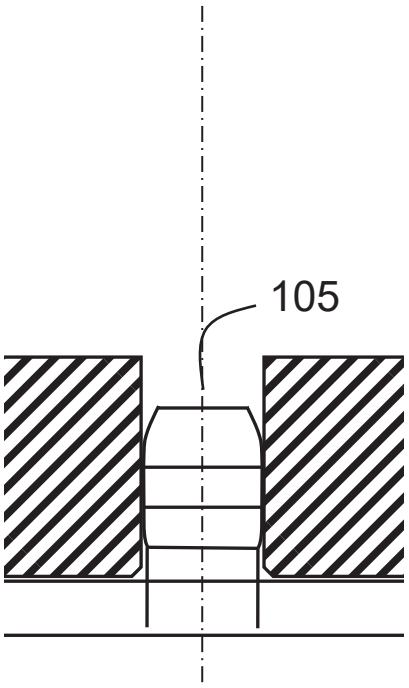

FIG.13A

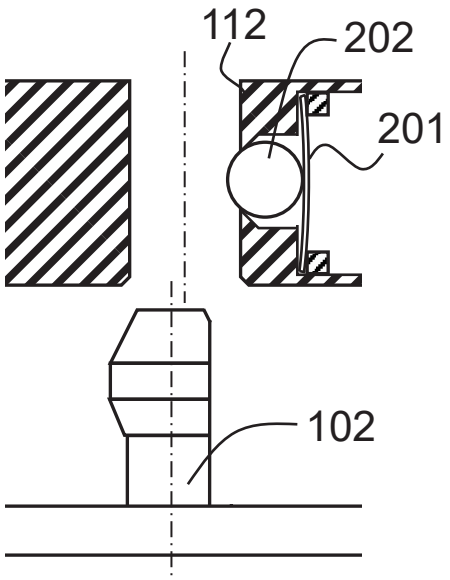

FIG.13B

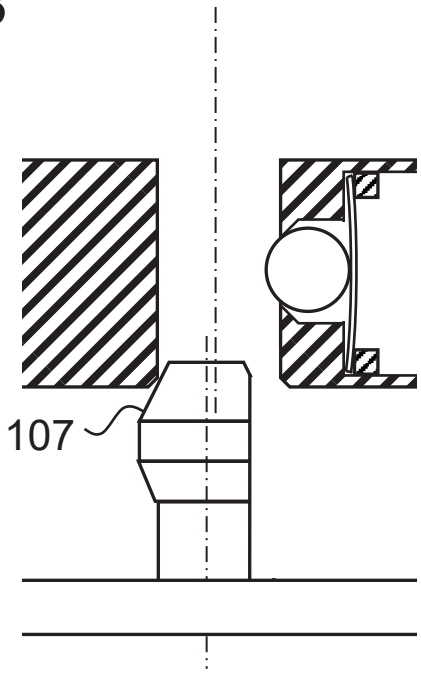

FIG.13C

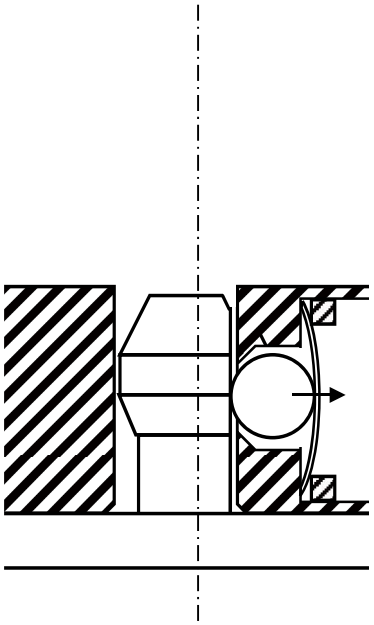

FIG.13D

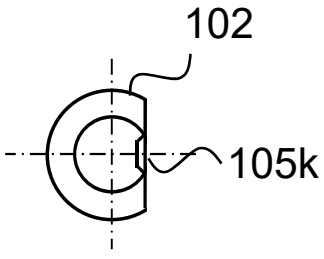

FIG.14

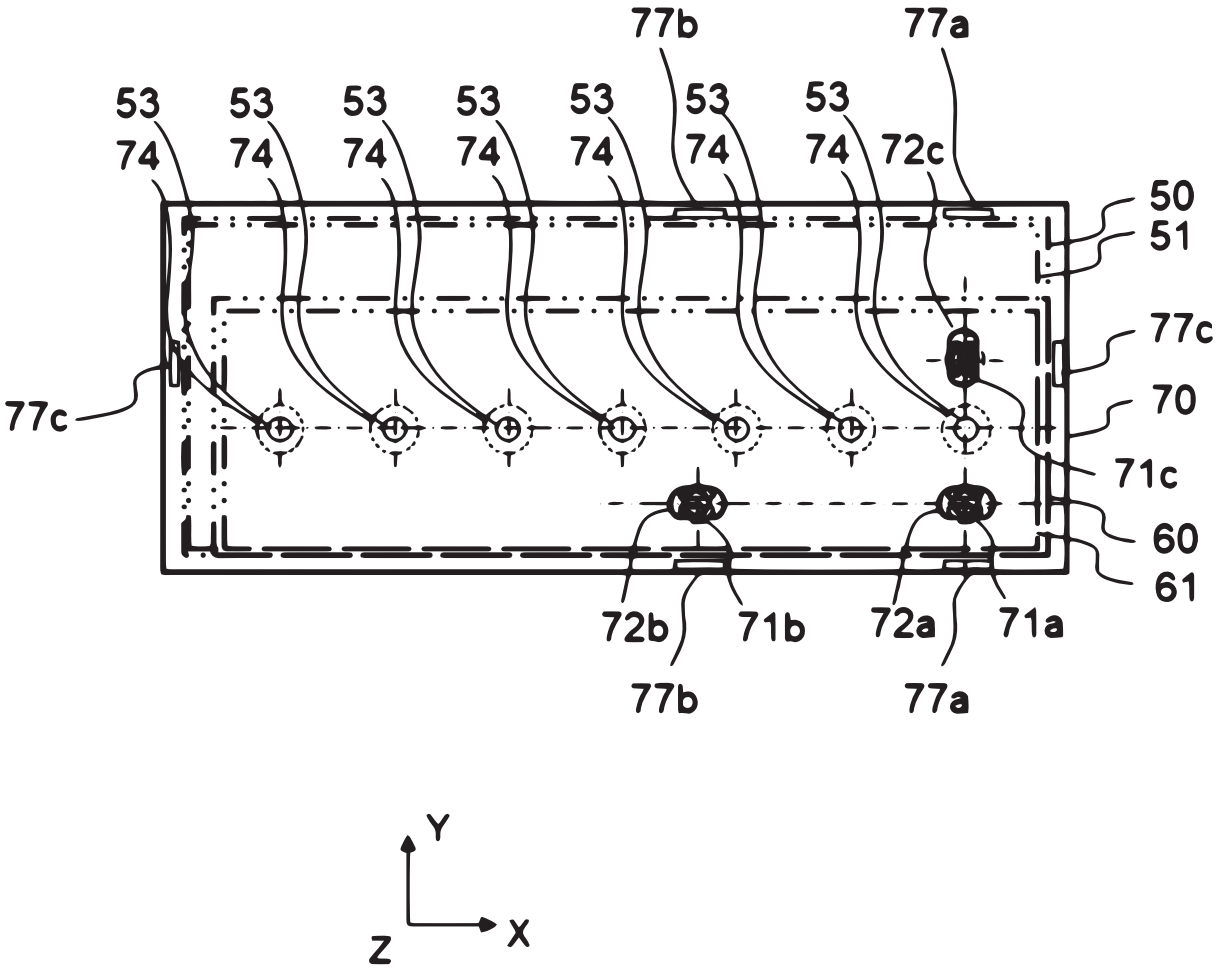

FIG.15

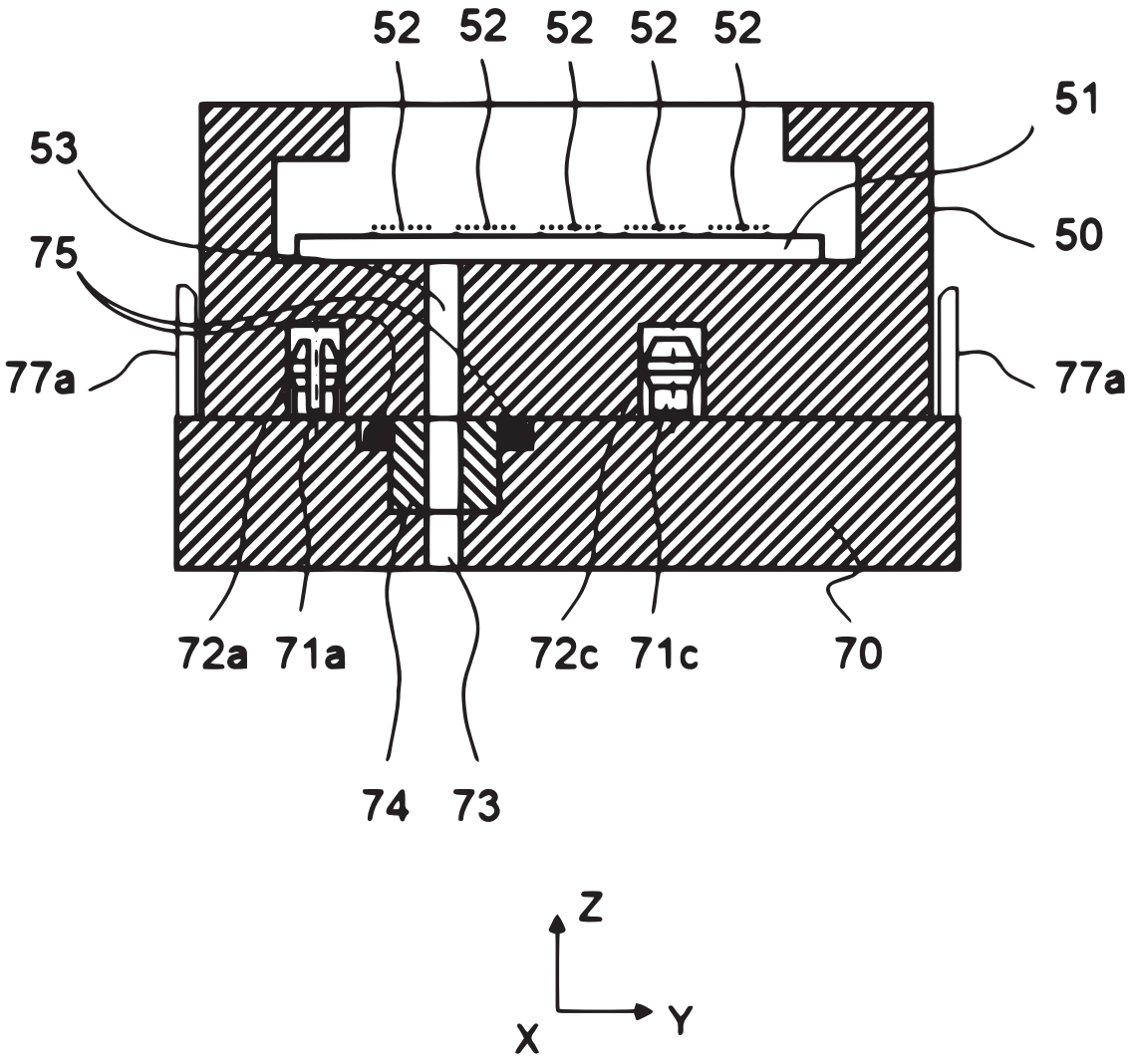

FIG.16

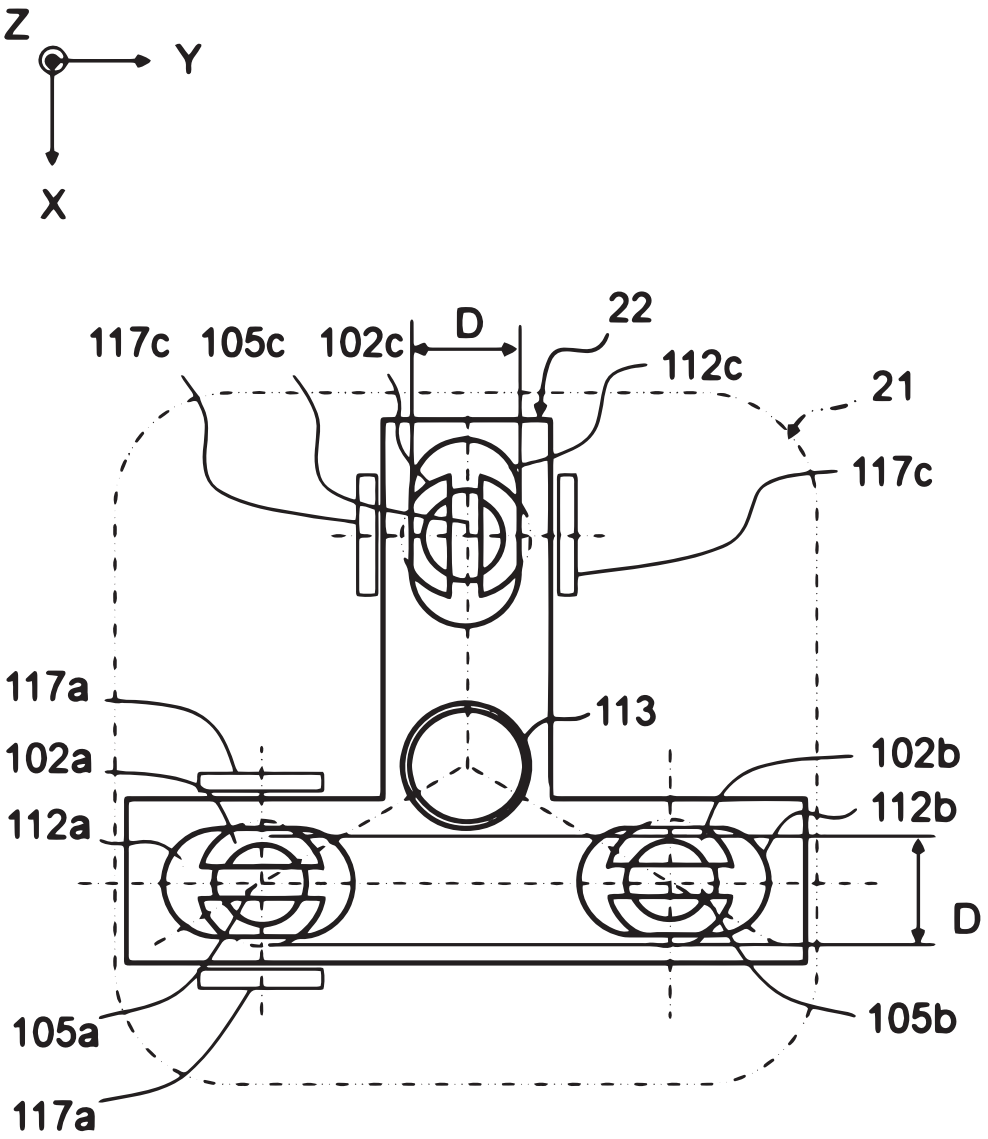
Z
Y
X
117c
105c
102c
D
22
112c
21
117c
117a
102a
112a
113
102b
112b
D
105a
117a
105b

FIG.17

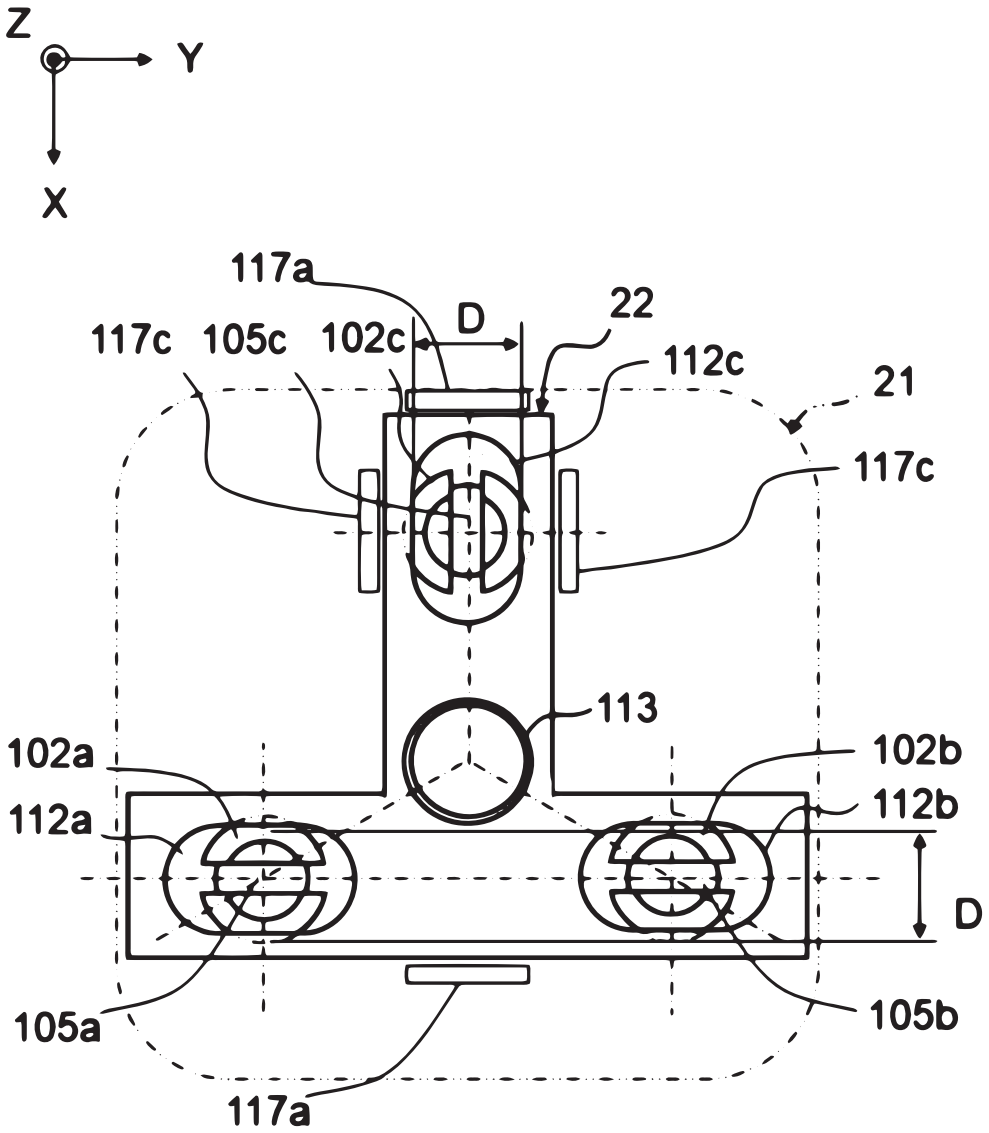
Z
Y
X
117a
D
22
117c
105c
102c
112c
21
117c
113
102a
102b
112a
112b
D
105a
105b
117a

FIG.18

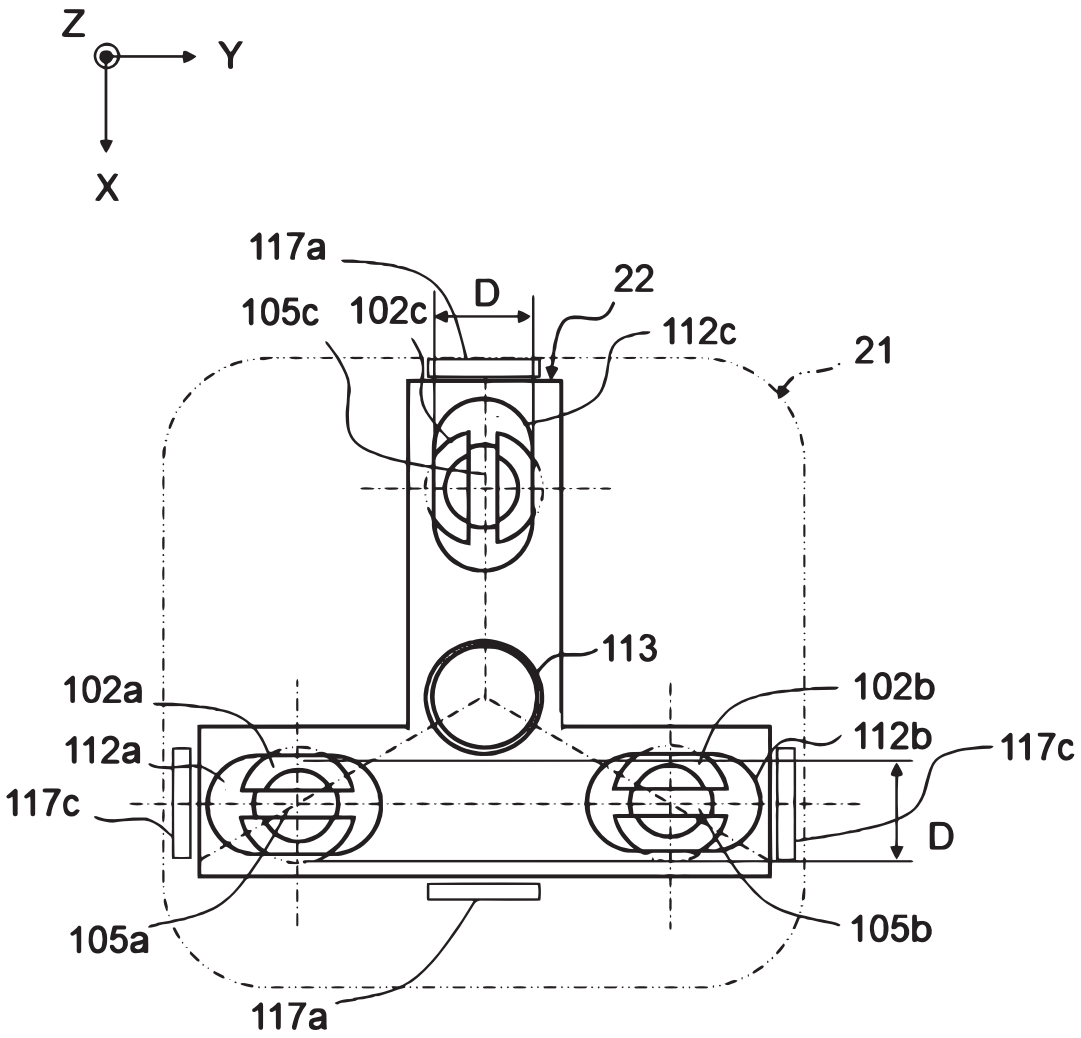
Z
Y
X
117a
D
22
105c
102c
112c
21
113
102a
102b
112a
112b
117c
117c
D
105a
105b
117a

FIG.19

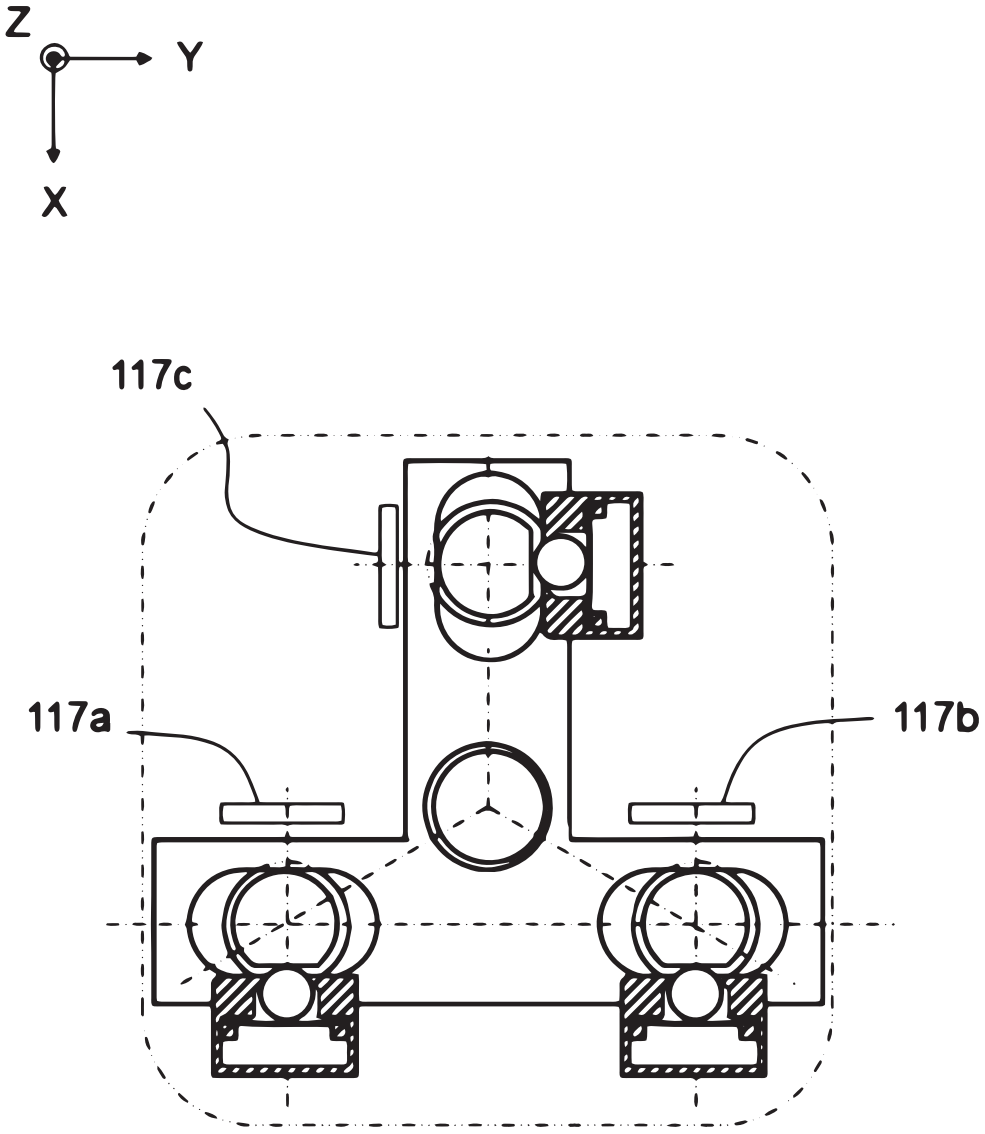

FIG.20

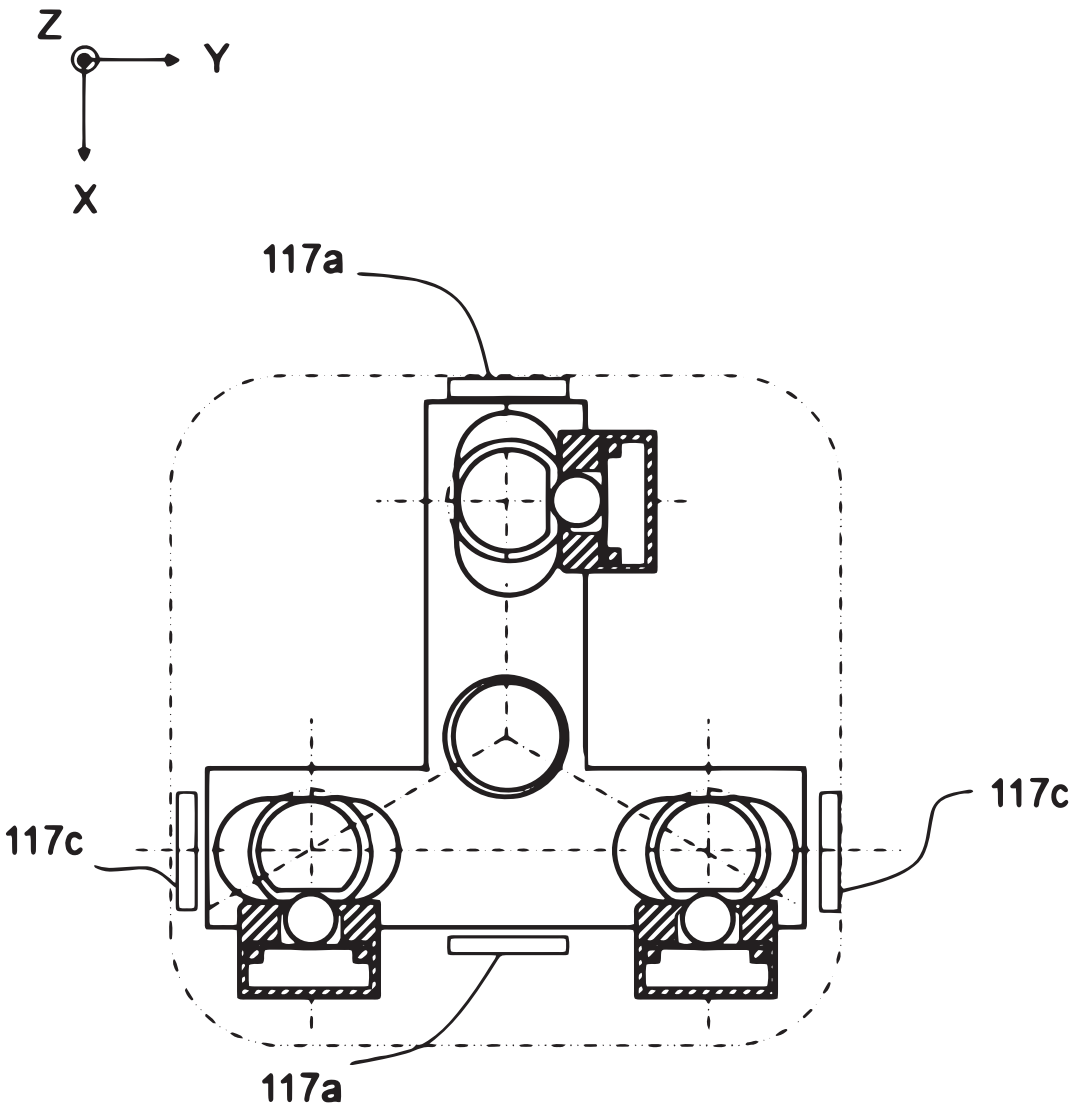

FIG.21

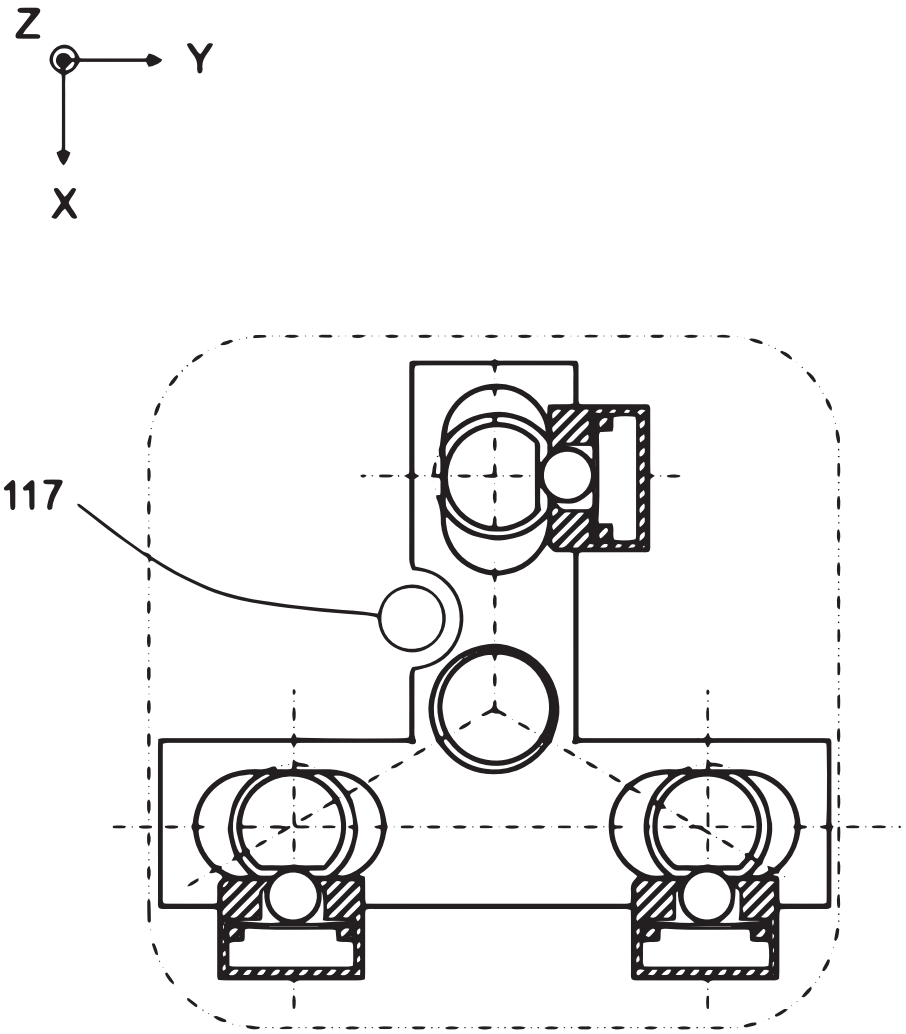

FIG.22

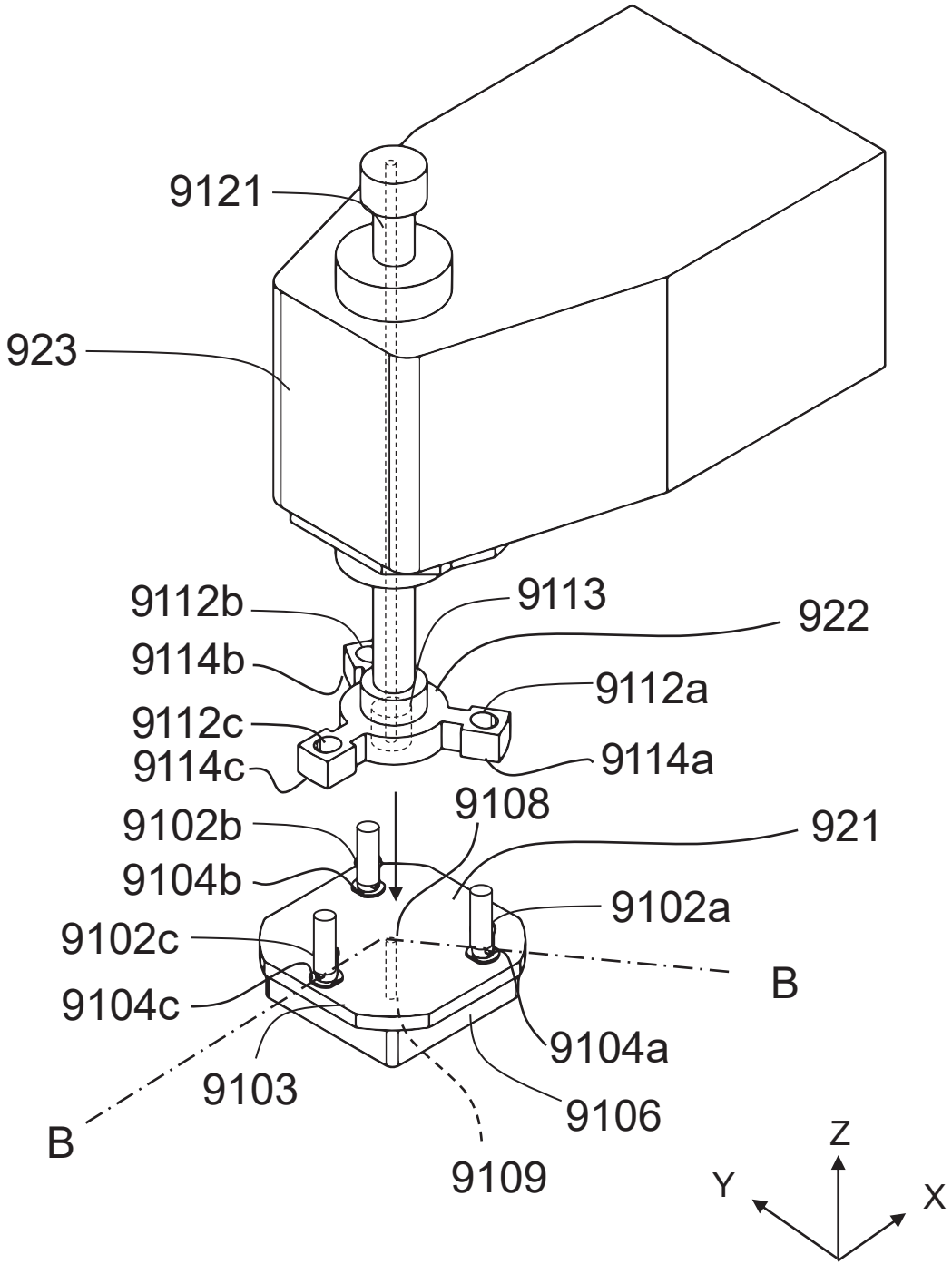
9121
923
9112b
9113
922
9114b
9112a
9112c
9114c
9114a
9108
9102b
921
9104b
9102a
9102c
B
9104c
9104a
9103
9106
B
9109
Z
Y
X

FIG.23

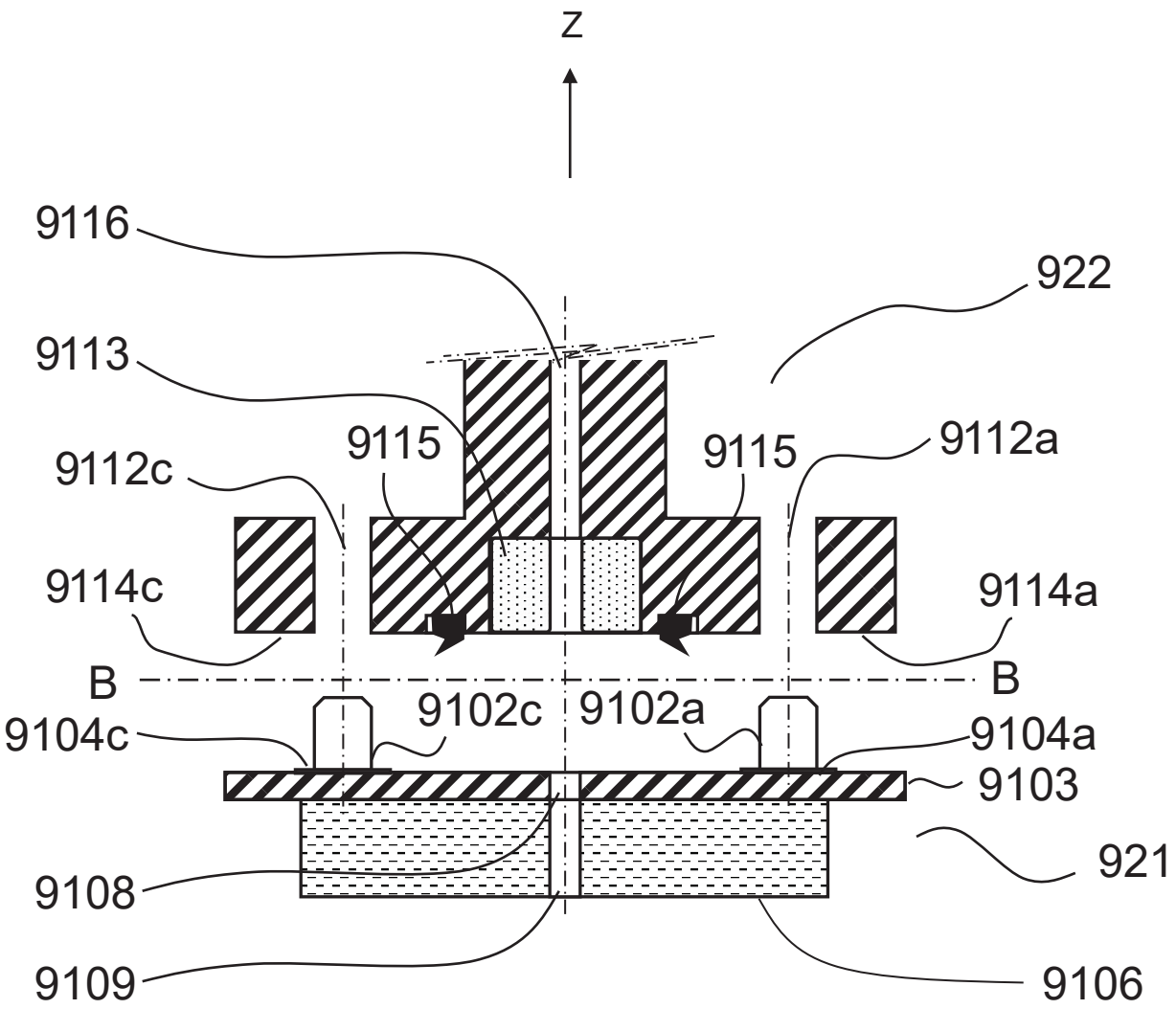
Z
9116
922
9113
9115
9115
9112a
9112c
9114c
9114a
B
B
9102c
9102a
9104c
9104a
9103
921
9108
9109
9106

FIG.24A

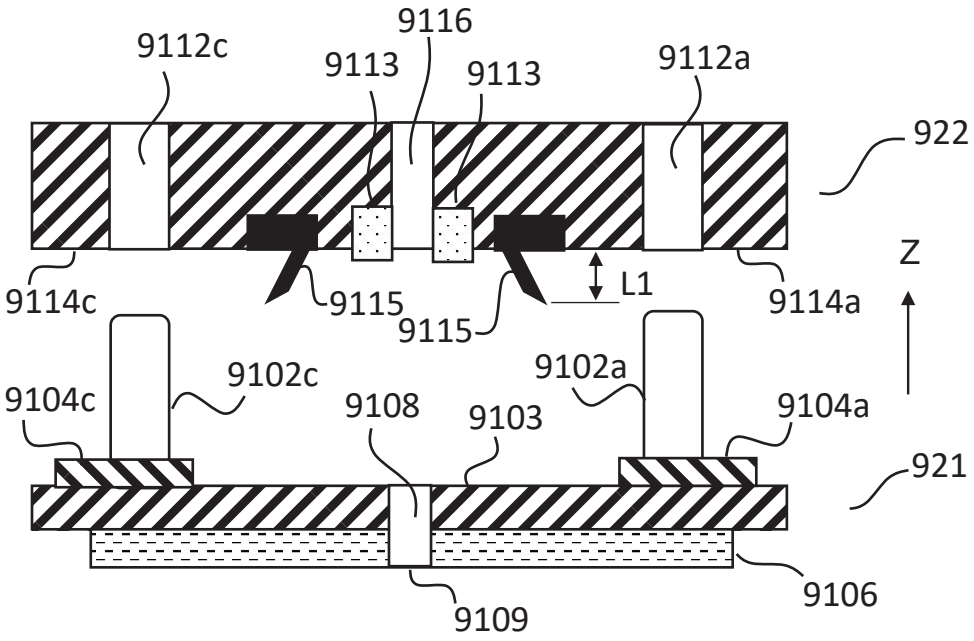

FIG.24B

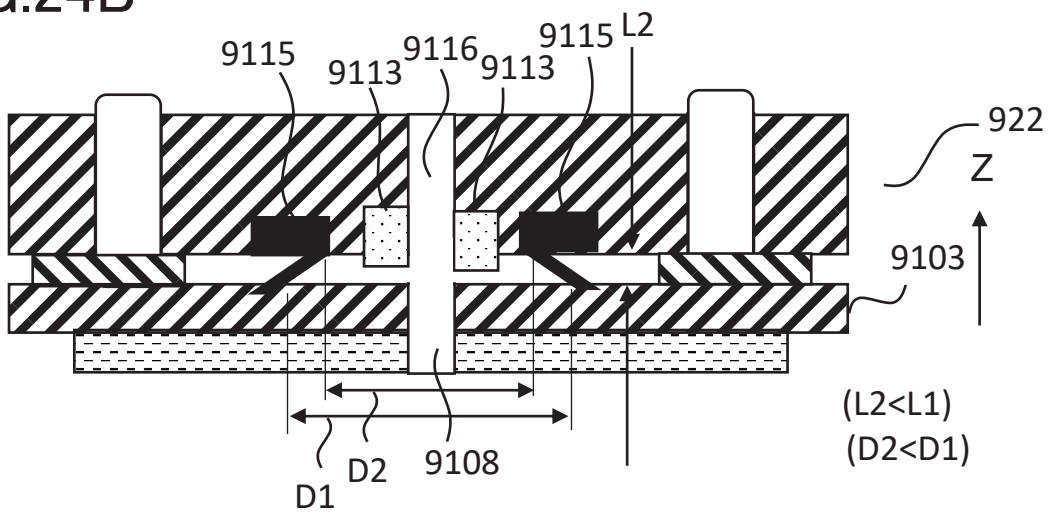

FIG.24C

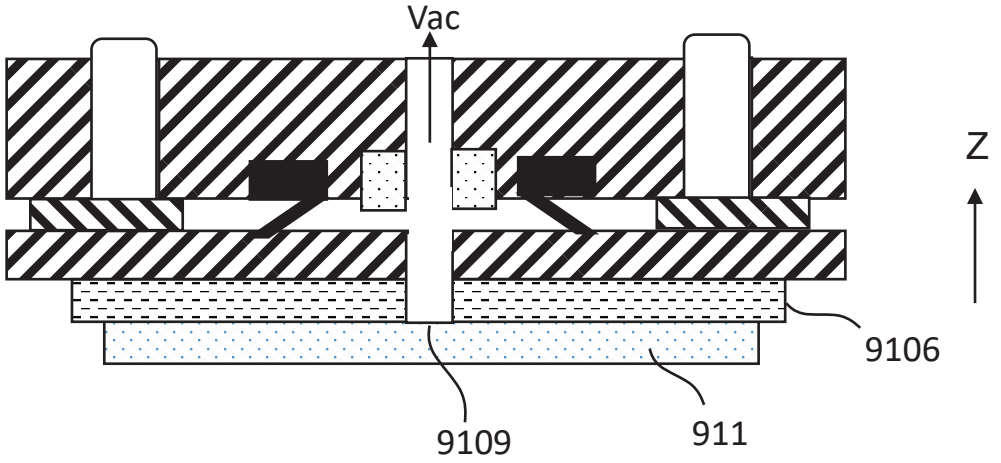

FIG.25

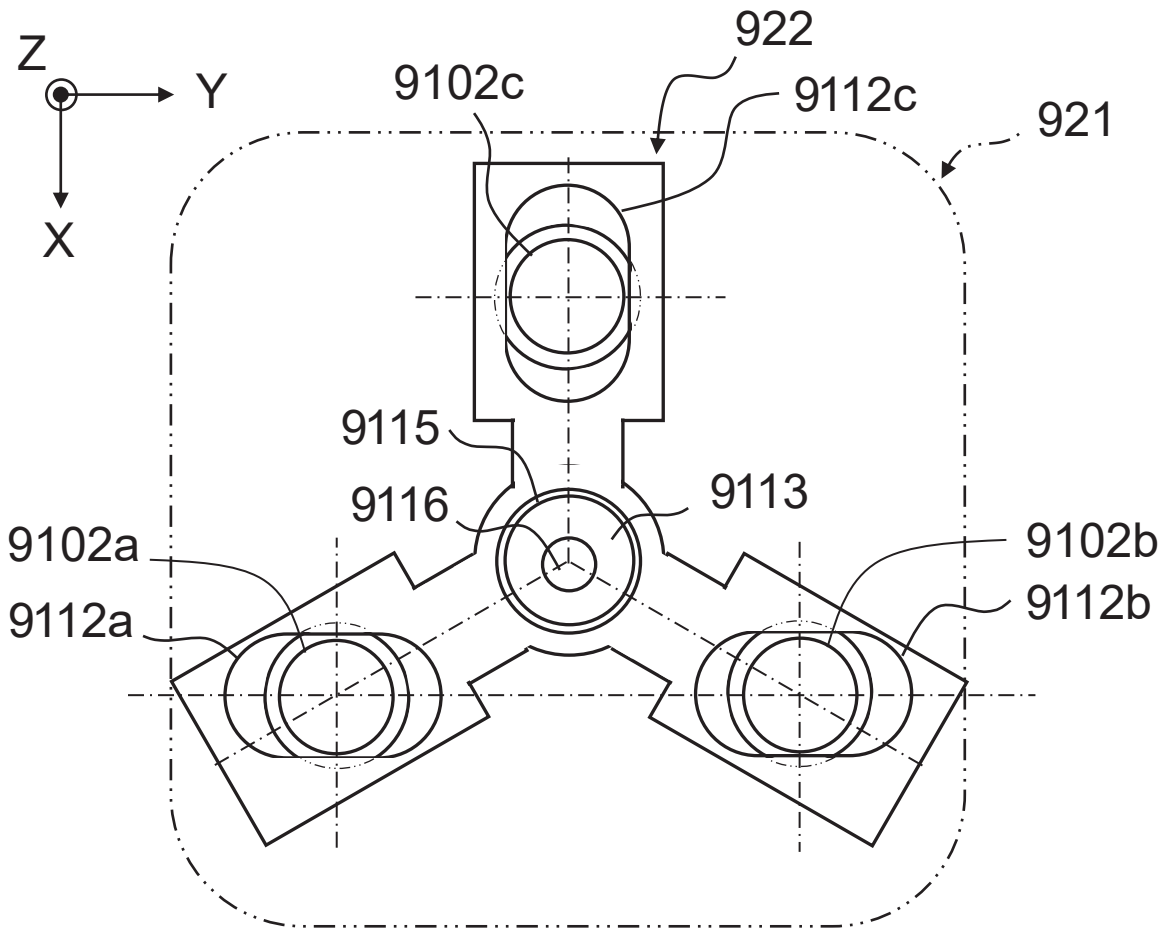
Z
Y
X
922
9102c
9112c
921
9115
9116
9113
9102a
9112a
9102b
9112b

FIG.26

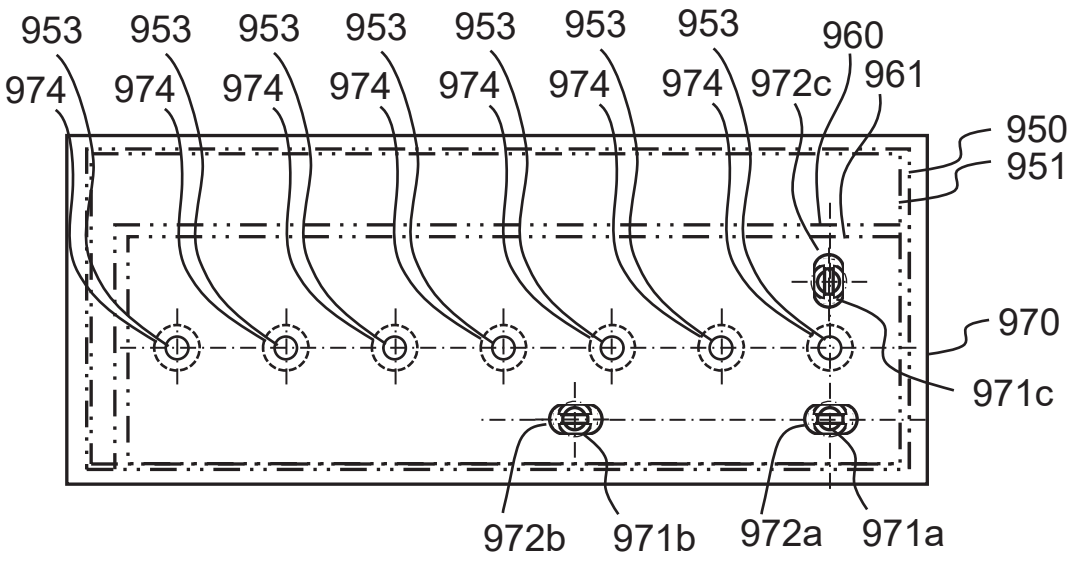
953
953
953
953
953
953
953
960
974
974
974
974
974
974
974
972c
961
950
951
970
971c
972b
971b
972a
971a

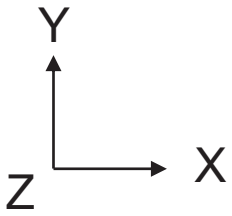
Y
X
Z

FIG.27

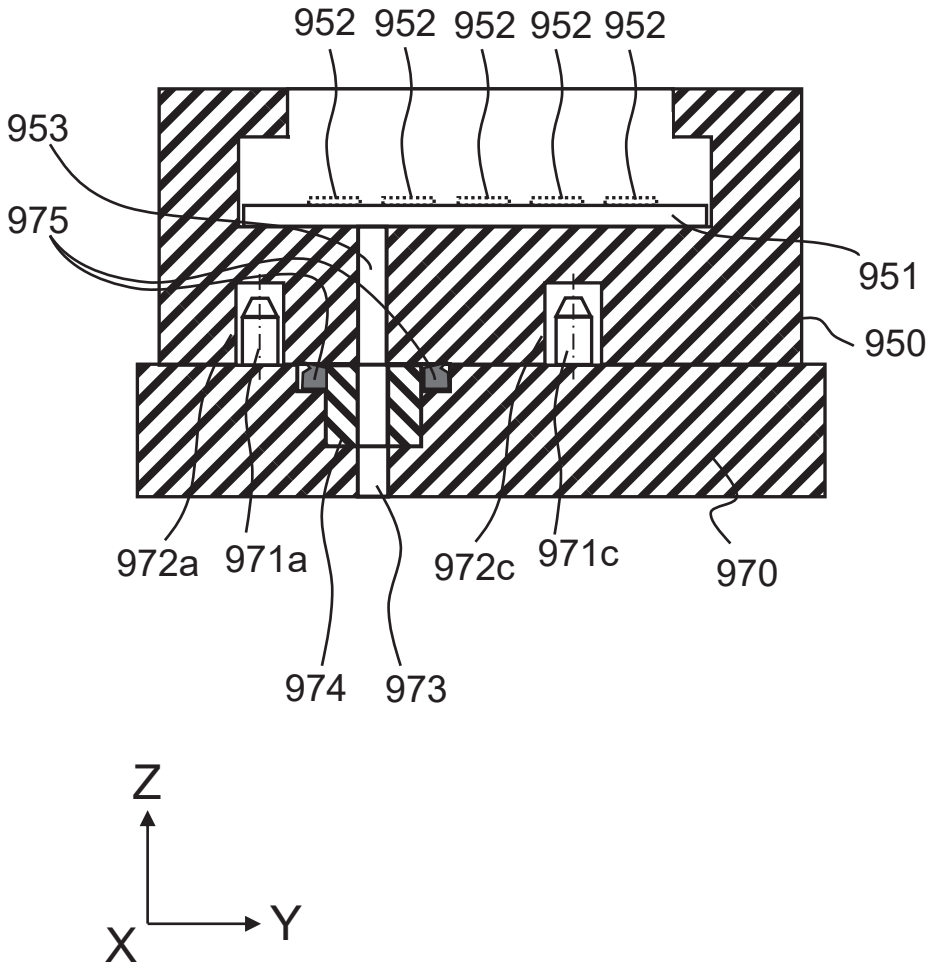
952
952
952
952
952
953
975
951
950
972a
971a
974
973
972c
971c
970
Z
Y
X