~~1/8~~

1/9

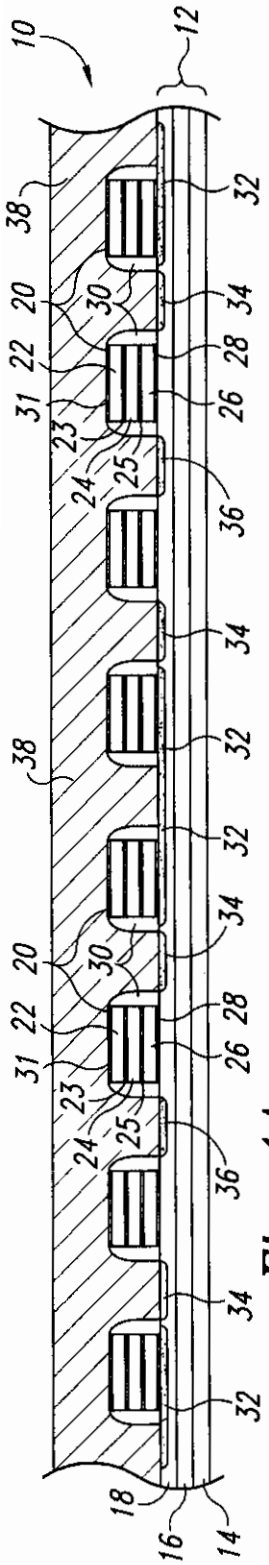

Fig. 1A

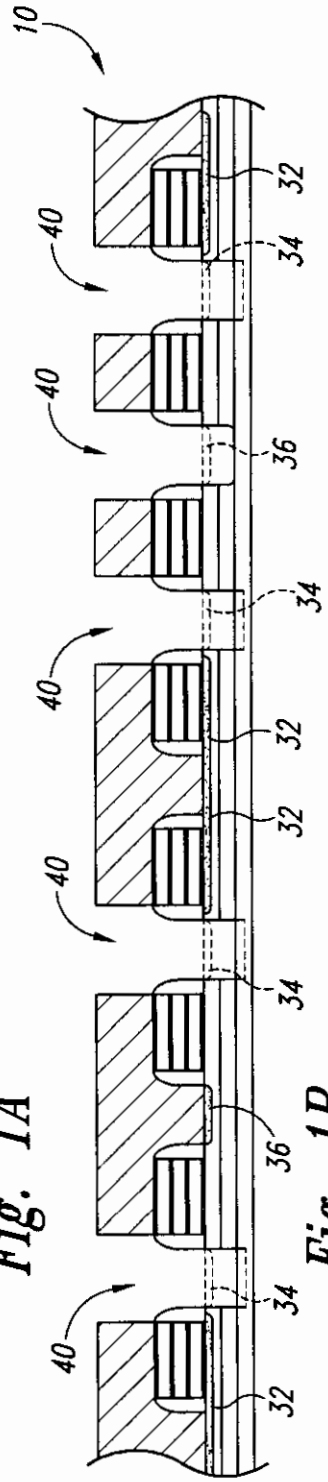

Fig. 1B

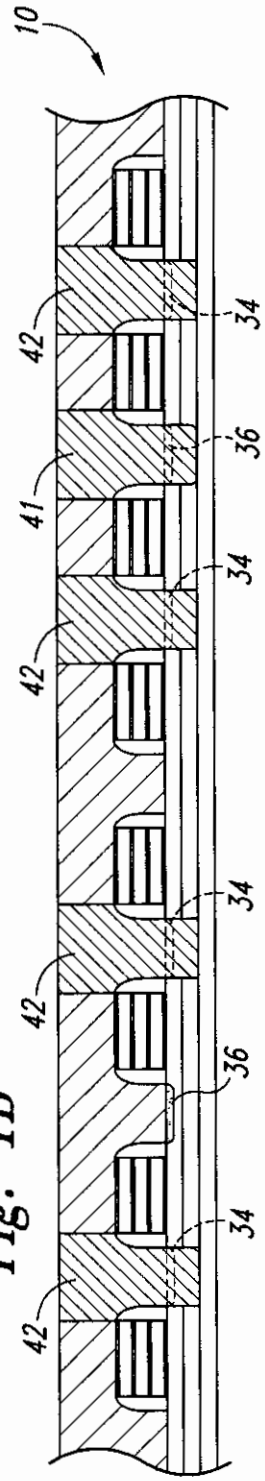

Fig. 2A

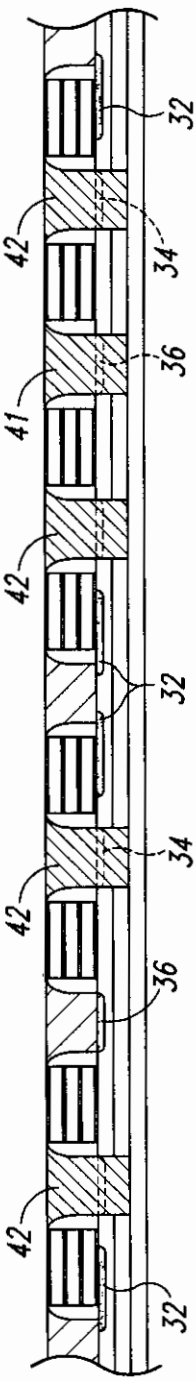

Fig. 2B

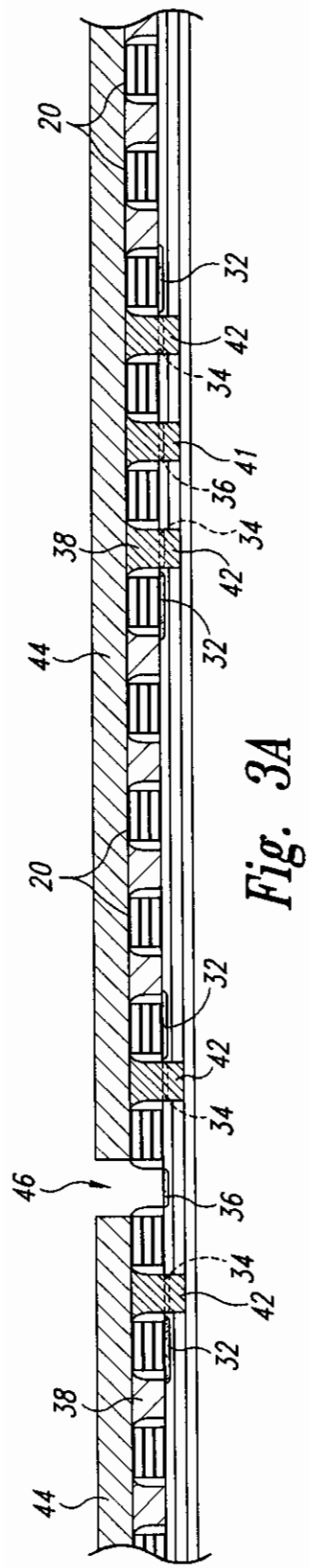

Fig. 3A

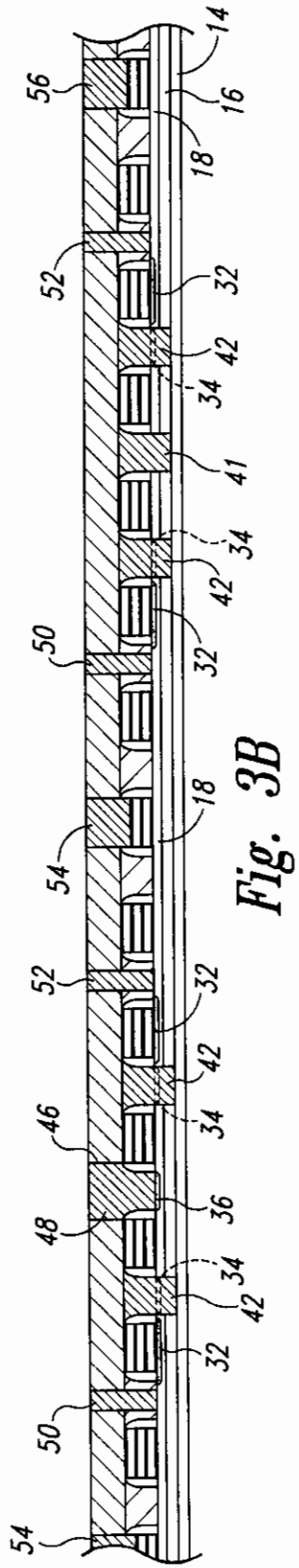

Fig. 3B

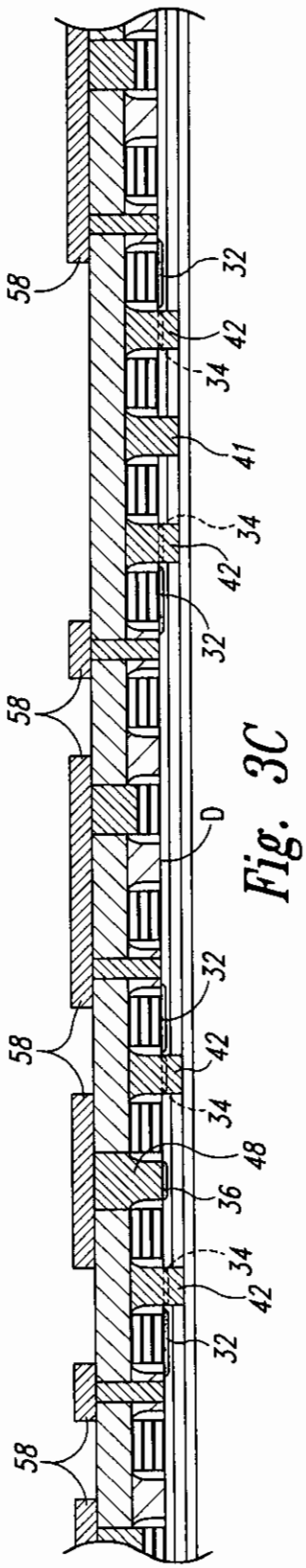

Fig. 3C

~~3/8~~

3/9

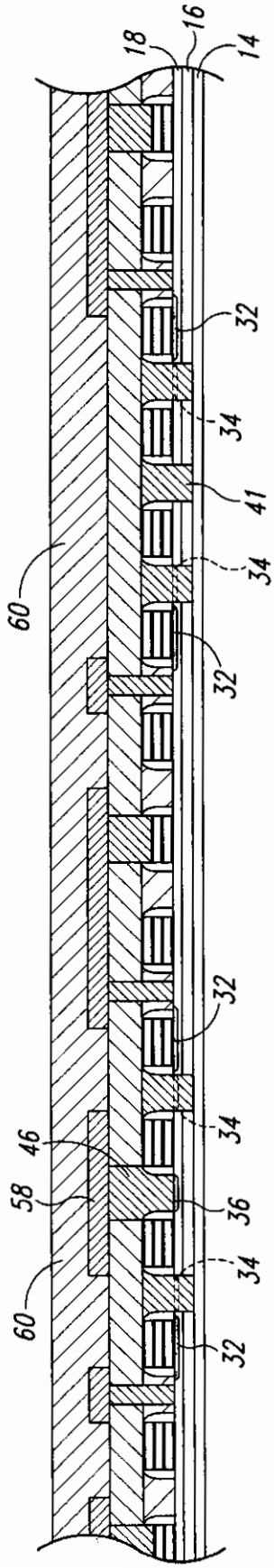

Fig. 4

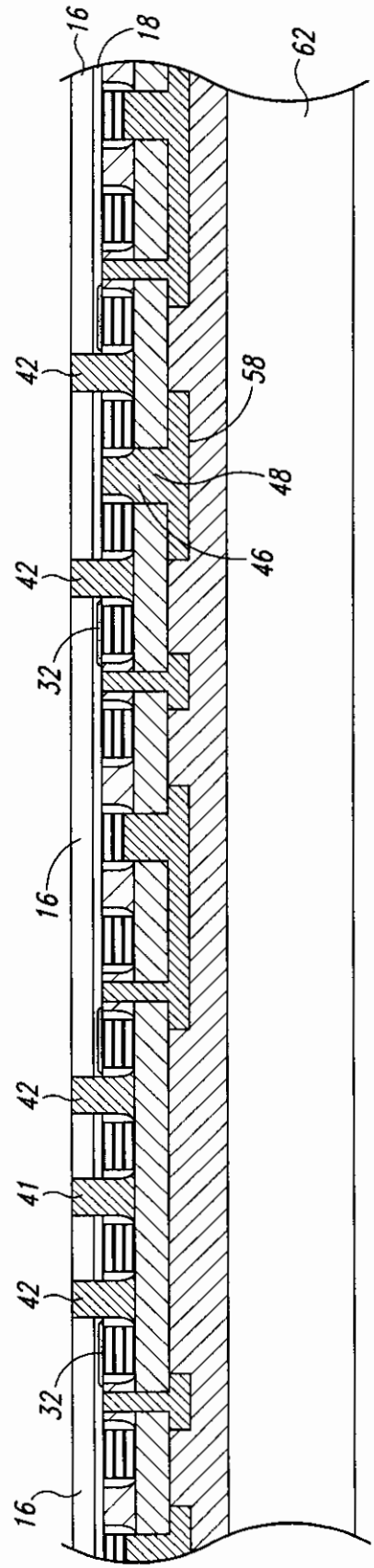

Fig. 5

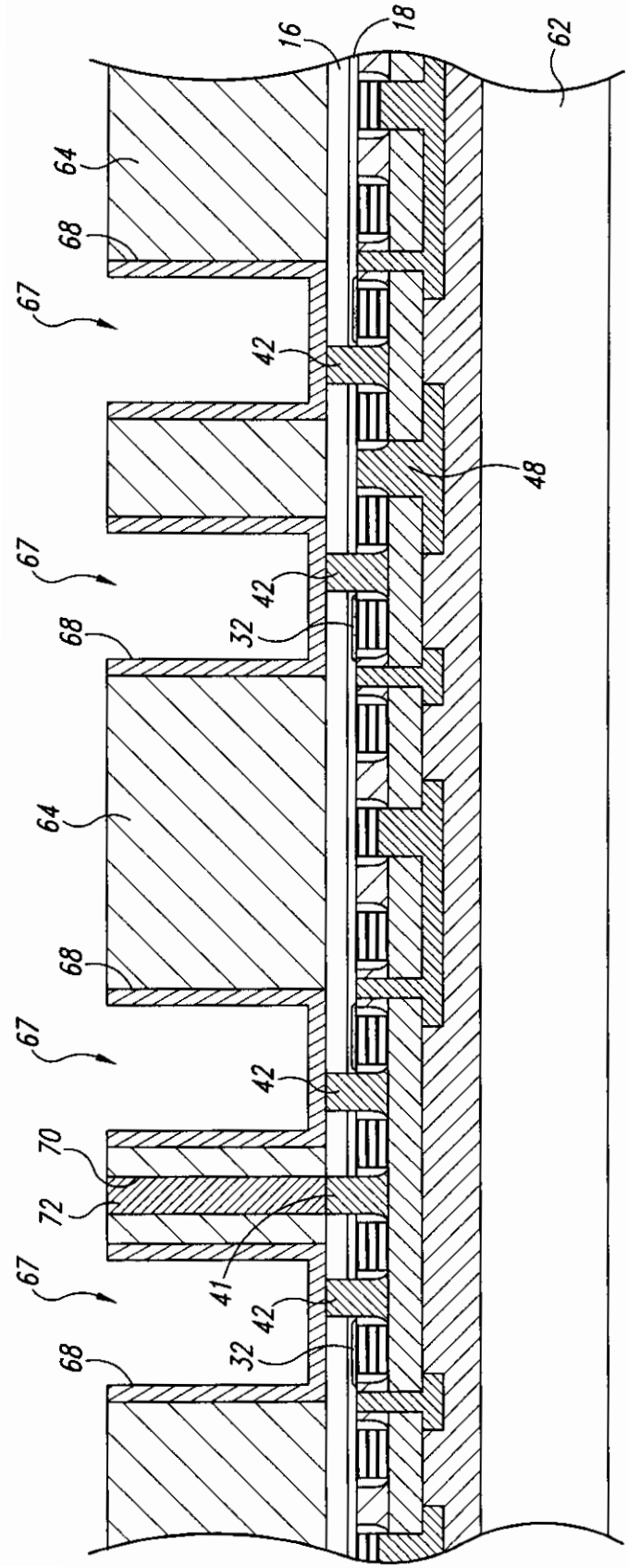

Fig. 6

~~5/8~~

5/9

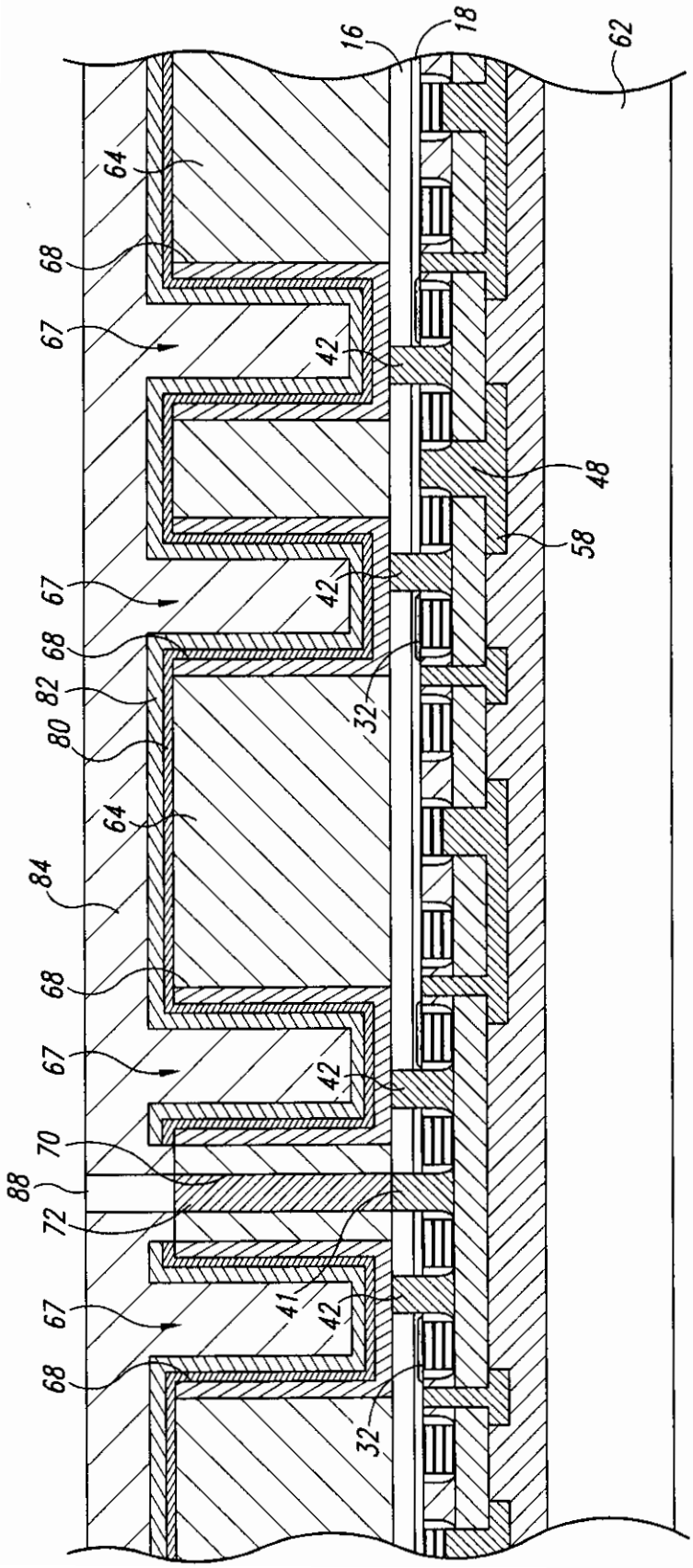
16
18
62
64
68
67
42
48
58
67
42
68
82
80
32
64
84
68
67
42
70
88
72
41
42
67
68
32

Fig. 7

~~6/8~~

6/9

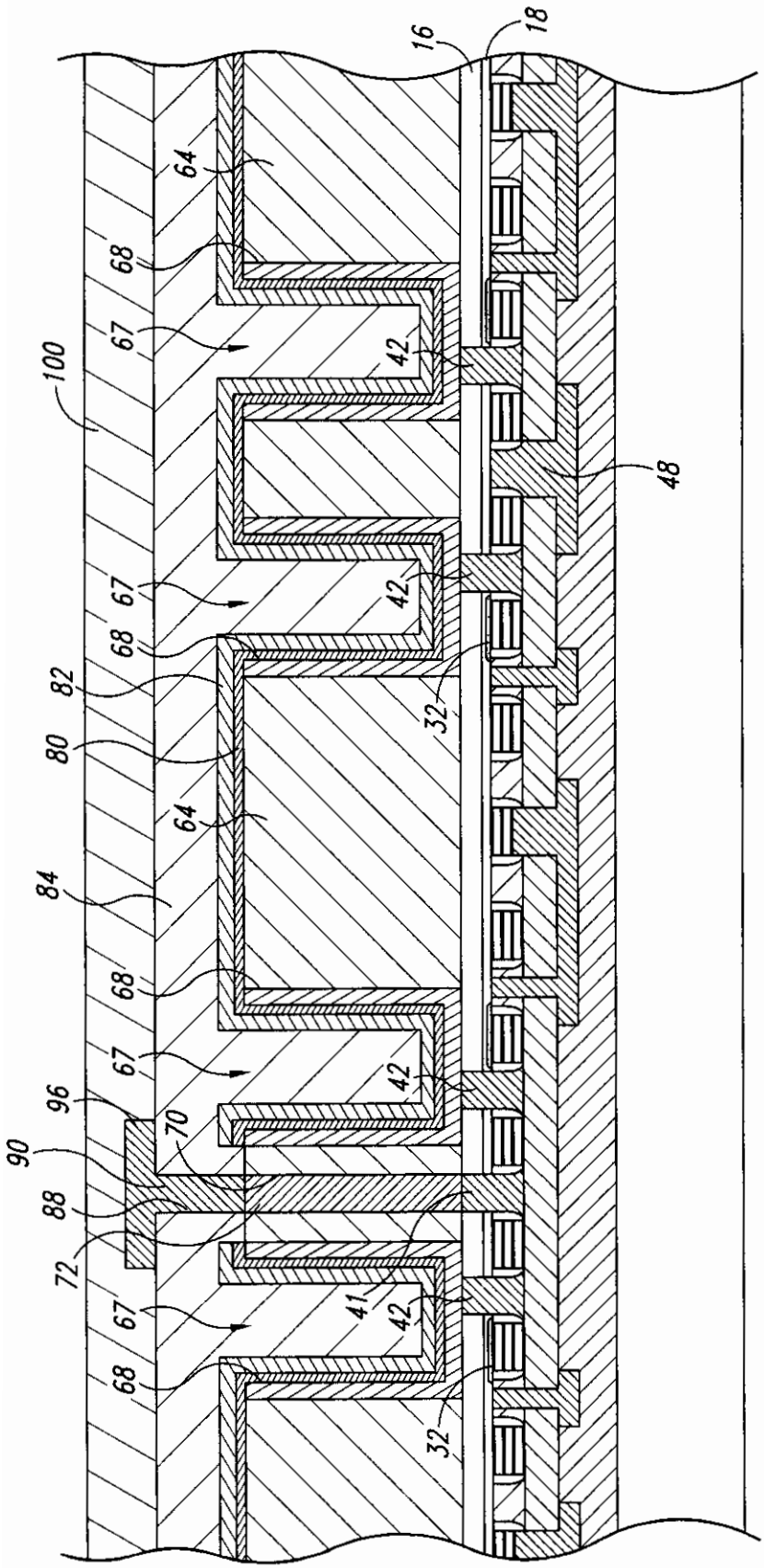
16
18
64
68
67
42
100
48
67
42
68
82
32
80
64
84
68
67
42
96
70
90
88
72
41
42
67
68
32

Fig. 8

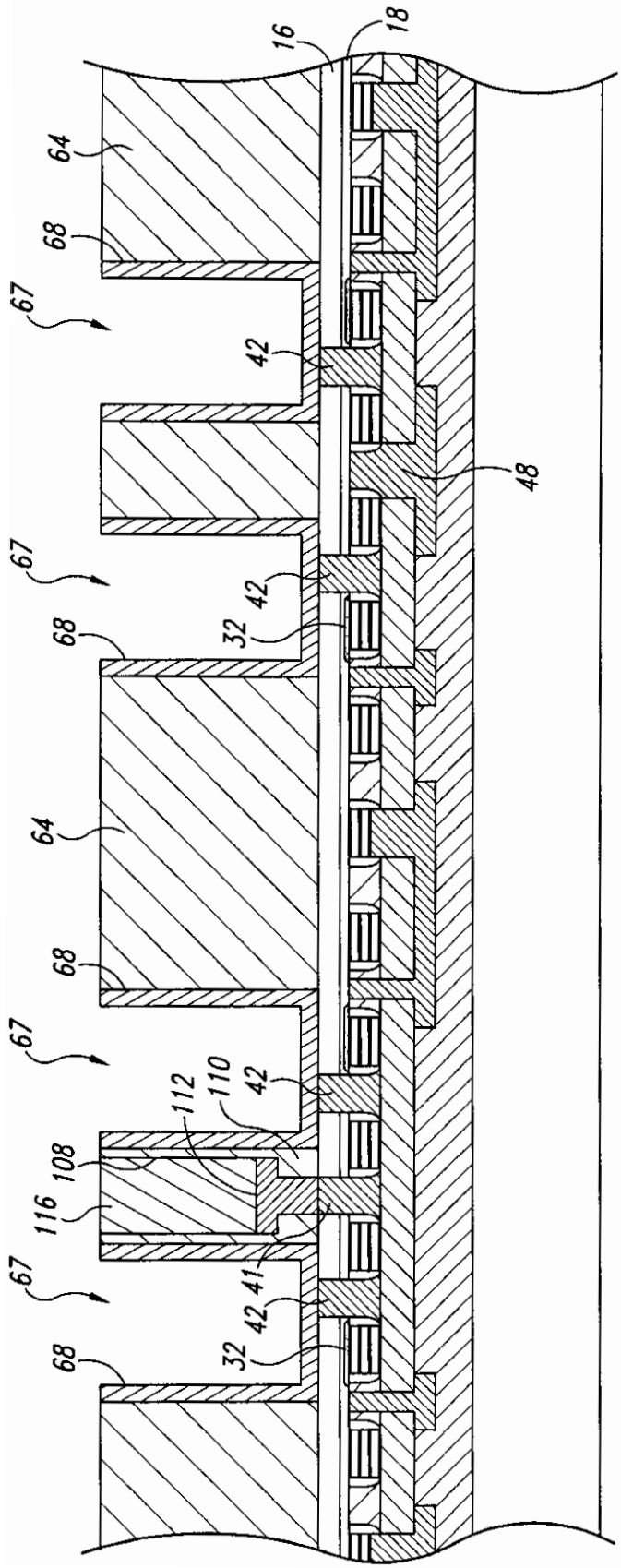
16
18
64
68
67
42
48
67
42
68
32
64
68
67
112
110
42
108
116
67
41
42
32
68

Fig. 9

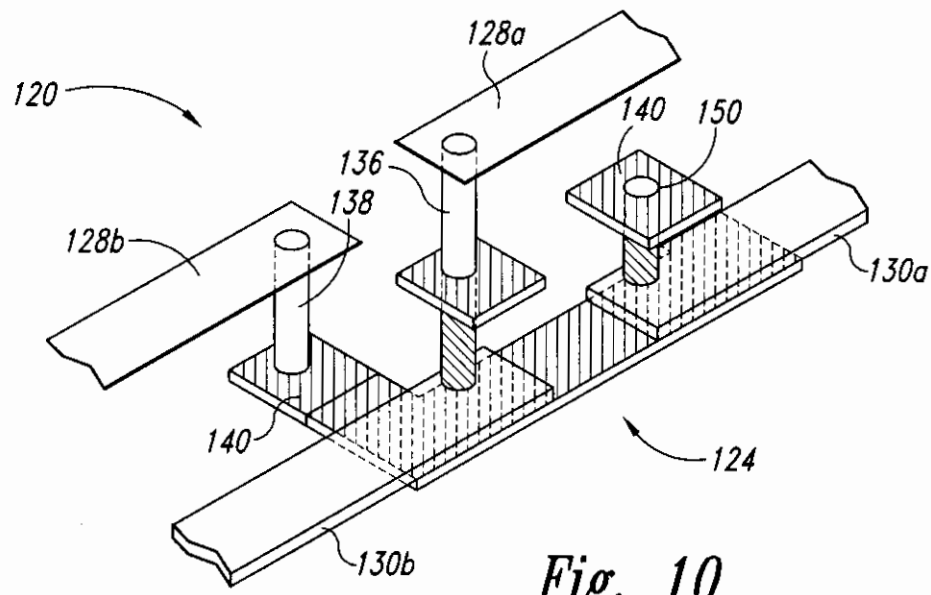
120
128a
140
150
136
138
128b
130a
140
124
130b

Fig. 10

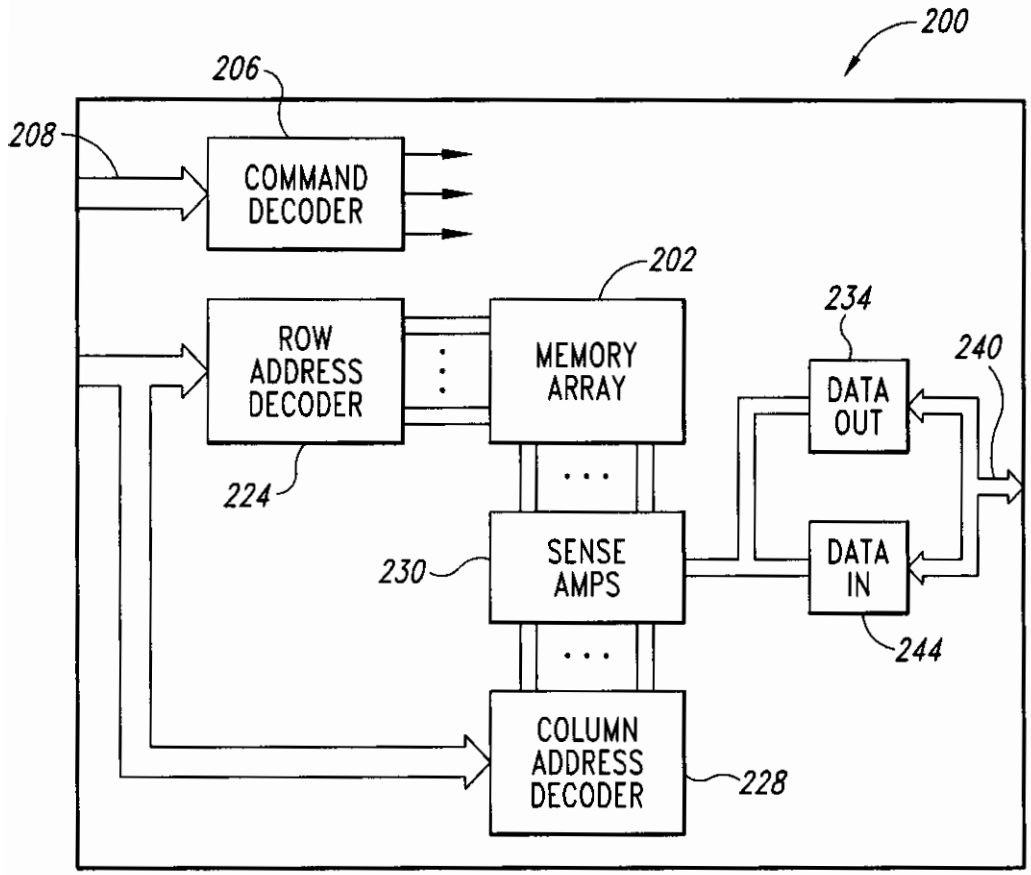
200
206
208
COMMAND DECODER
202
234
240
ROW ADDRESS DECODER
MEMORY ARRAY
DATA OUT
224
SENSE AMPS
230
DATA IN
244
COLUMN ADDRESS DECODER
228

Fig. 11

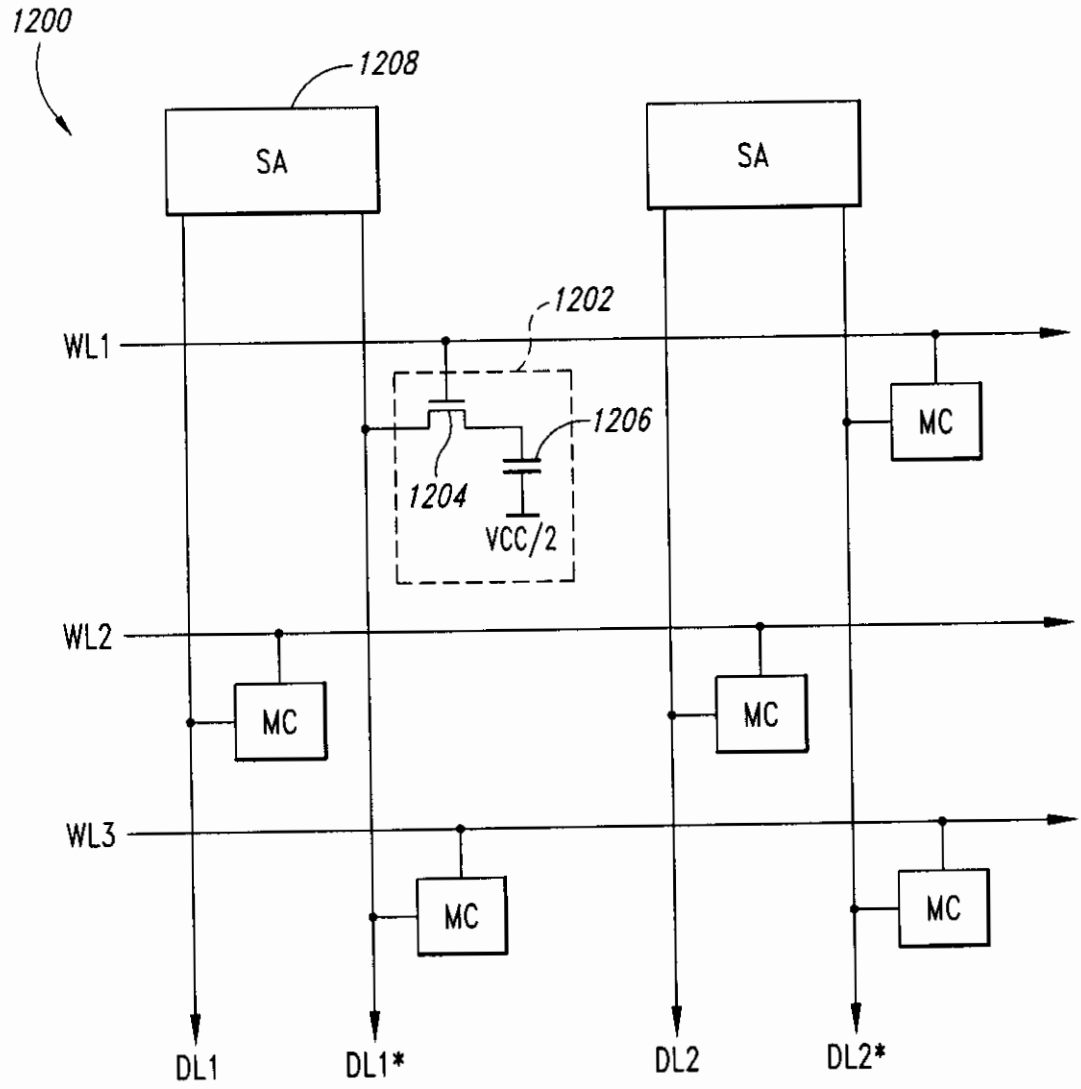

Fig. 12
(Prior Art)