(12) INTERNATIONAL APPLICATION PUBLISHED UNDER THE PATENT COOPERATION TREATY (PCT)

(19) World Intellectual Property Organization
International Bureau

(43) International Publication Date
03 March 2022 (03.03.2022)

WIPO | PCT

(10) International Publication Number
WO 2022/043697 A1

(51) International Patent Classification:
*B01L 3/00* (2006.01)

(21) International Application Number:
PCT/GB2021/052224

(22) International Filing Date:
26 August 2021 (26.08.2021)

(25) Filing Language: English

(26) Publication Language: English

(30) Priority Data:

| | | |
|---|---|---|
| 2013353.4 | 26 August 2020 (26.08.2020) | GB |
| 2013354.2 | 26 August 2020 (26.08.2020) | GB |
| 2013356.7 | 26 August 2020 (26.08.2020) | GB |
| 2013358.3 | 26 August 2020 (26.08.2020) | GB |
| 2013361.7 | 26 August 2020 (26.08.2020) | GB |


(71) Applicant: **SENSE BIODETECTION LIMITED** [GB/GB]; Unit E5, Culham Science Centre, Abingdon Oxfordshire OX14 3EB (GB).

(72) Inventor: **LAMBLE, Ralph**; Sense Biodetection Limited, Unit E5, Culham Science Centre, Abingdon Oxfordshire OX14 3EB (GB).

(74) Agent: **TEUTEN, Andrew** et al.; Sagittarius IP, Marlow International, Parkway, Marlow Buckinghamshire SL7 1YL (GB).

(81) Designated States *(unless otherwise indicated, for every kind of national protection available)*: AE, AG, AL, AM, AO, AT, AU, AZ, BA, BB, BG, BH, BN, BR, BW, BY, BZ, CA, CH, CL, CN, CO, CR, CU, CZ, DE, DJ, DK, DM, DO, DZ, EC, EE, EG, ES, FI, GB, GD, GE, GH, GM, GT, HN, HR, HU, ID, IL, IN, IR, IS, IT, JO, JP, KE, KG, KH, KN, KP, KR, KW, KZ, LA, LC, LK, LR, LS, LU, LY, MA, MD, ME, MG, MK, MN, MW, MX, MY, MZ, NA, NG, NI, NO, NZ, OM, PA, PE, PG, PH, PL, PT, QA, RO, RS, RU, RW, SA, SC, SD, SE, SG, SK, SL, ST, SV, SY, TH, TJ, TM, TN, TR, TT, TZ, UA, UG, US, UZ, VC, VN, WS, ZA, ZM, ZW.

(84) Designated States *(unless otherwise indicated, for every kind of regional protection available)*: ARIPO (BW, GH,

(54) Title: DEVICES

Fig. 1

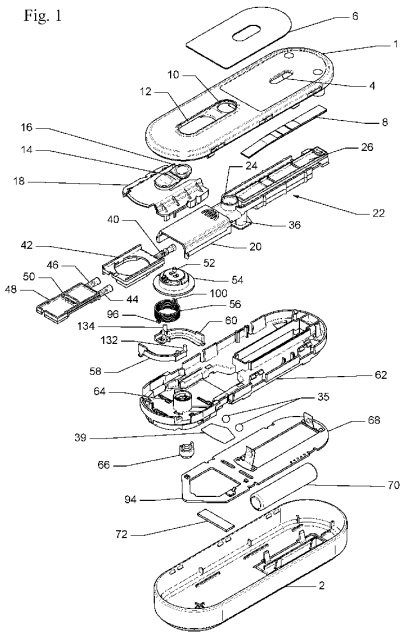


(57) Abstract: A device for use in the analysis of a biomolecule in a liquid sample, the device having a plurality of zones for accommodating at least part of the liquid sample, transfer means for transferring at least part of the liquid sample from one to another of said zones along a respective flow path, mechanically powered drive means for operating the transfer means, flow control means for selectively opening one or more flow path between the zones, and a common actuating member which sequentially controls both the mechanically powered drive means and the flow control means to achieve transfer of at least part of the liquid sample between said zones.

WO 2022/043697 A1

*[Continued on next page]*

GM, KE, LR, LS, MW, MZ, NA, RW, SD, SL, ST, SZ, TZ, UG, ZM, ZW), Eurasian (AM, AZ, BY, KG, KZ, RU, TJ, TM), European (AL, AT, BE, BG, CH, CY, CZ, DE, DK, EE, ES, FI, FR, GB, GR, HR, HU, IE, IS, IT, LT, LU, LV, MC, MK, MT, NL, NO, PL, PT, RO, RS, SE, SI, SK, SM, TR), OAPI (BF, BJ, CF, CG, CI, CM, GA, GN, GQ, GW, KM, ML, MR, NE, SN, TD, TG).

**Declarations under Rule 4.17:**

— *of inventorship (Rule 4.17(iv))*

**Published:**

— *with international search report (Art. 21(3))*