(12) INTERNATIONAL APPLICATION PUBLISHED UNDER THE PATENT COOPERATION TREATY (PCT)

(19) World Intellectual Property Organization
International Bureau

(43) International Publication Date
14 May 2010 (14.05.2010)

PCT

(10) International Publication Number
WO 2010/052690 A3

(51) International Patent Classification:
B63B 35/03 (2006.01)

(21) International Application Number:
PCT/IB2009/056008

(22) International Filing Date:
6 November 2009 (06.11.2009)

(25) Filing Language: English

(26) Publication Language: English

(30) Priority Data:
0820412.5 7 November 2008 (07.11.2008) GB

(71) Applicant *(for all designated States except US)*: **ACERGY FRANCE SA** [—/FR]; 1 Quai Marcel Dassault, F-92150 Suresnes (FR).

(72) Inventor; and
(75) Inventor/Applicant *(for US only)*: **ALLIOT, Vincent** [FR/FR]; 29 rue Clauzel, F-75009 Paris (FR).

(74) Agents: **CUMMINGS, Sean** et al.; Keltie, Fleet Place House, 2 Fleet Place, London EC4M 7ET (GB).

(81) Designated States *(unless otherwise indicated, for every kind of national protection available)*: AE, AG, AL, AM, AO, AT, AU, AZ, BA, BB, BG, BH, BR, BW, BY, BZ, CA, CH, CL, CN, CO, CR, CU, CZ, DE, DK, DM, DO, DZ, EC, EE, EG, ES, FI, GB, GD, GE, GH, GM, GT, HN, HR, HU, ID, IL, IN, IS, JP, KE, KG, KM, KN, KP, KR, KZ, LA, LC, LK, LR, LS, LT, LU, LY, MA, MD, ME, MG, MK, MN, MW, MX, MY, MZ, NA, NG, NI, NO, NZ, OM, PE, PG, PH, PL, PT, RO, RS, RU, SC, SD, SE, SG, SK, SL, SM, ST, SV, SY, TJ, TM, TN, TR, TT, TZ, UA, UG, US, UZ, VC, VN, ZA, ZM, ZW.

(84) Designated States *(unless otherwise indicated, for every kind of regional protection available)*: ARIPO (BW, GH, GM, KE, LS, MW, MZ, NA, SD, SL, SZ, TZ, UG, ZM, ZW), Eurasian (AM, AZ, BY, KG, KZ, MD, RU, TJ, TM), European (AT, BE, BG, CH, CY, CZ, DE, DK, EE, ES, FI, FR, GB, GR, HR, HU, IE, IS, IT, LT, LU, LV, MC, MK, MT, NL, NO, PL, PT, RO, SE, SI, SK, SM, TR), OAPI (BF, BJ, CF, CG, CI, CM, GA, GN, GQ, GW, ML, MR, NE, SN, TD, TG).

Published:

— *with international search report (Art. 21(3))*

— *before the expiration of the time limit for amending the claims and to be republished in the event of receipt of amendments (Rule 48.2(h))*

(88) Date of publication of the international search report:
5 May 2011

(54) Title: PIPELAY VESSEL

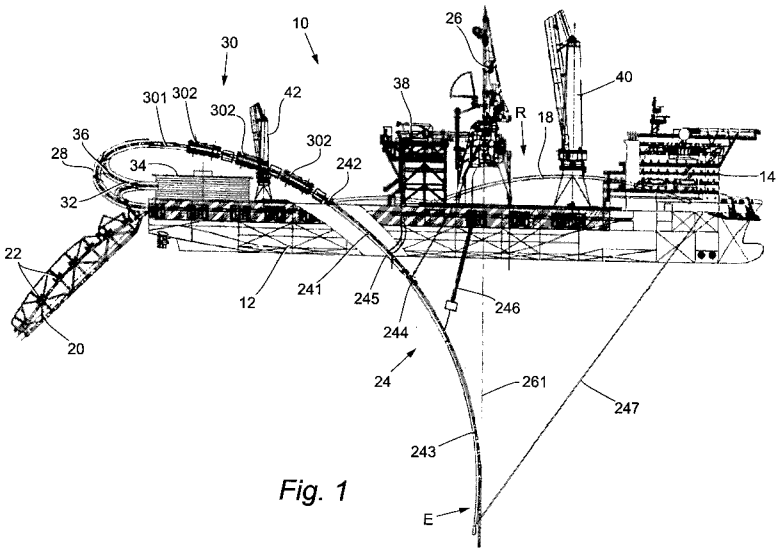

Fig. 1

(57) Abstract: A pipelay vessel (10) has a stinger (24) extending along and outboard of one side of the vessel. A diverter (28) is arranged to lead pipe onto the stinger input end through a predominantly horizontal diversion angle from pipeline source (18) having a substantially horizontal orientation. The vessel is selectively operable in any one of three modes, namely (1) shallow S-lay, in which the pipe is launched over a stern-mounted stinger (20) with a launch angle which has a predominantly horizontal component; (2) steep S-lay, in which the pipe is launched over the side-mounted stinger (24) with a launch angle which has a predominantly vertical component; and (3) J-lay, in which the pipe is welded at and launched from a tower (26). The axis (261) of the J-lay apparatus is aligned with the departure axis of the side-mounted stinger (24).

WO 2010/052690 A3