(12) INTERNATIONAL APPLICATION PUBLISHED UNDER THE PATENT COOPERATION TREATY (PCT)

(19) World Intellectual Property Organization
International Bureau

(43) International Publication Date
25 March 2010 (25.03.2010)

PCT

(10) International Publication Number
WO 2010/033389 A1

(51) International Patent Classification:
H01L 21/324 (2006.01)

(21) International Application Number:
PCT/US2009/055838

(22) International Filing Date:
3 September 2009 (03.09.2009)

(25) Filing Language: English

(26) Publication Language: English

(30) Priority Data:
12/212,157 17 September 2008 (17.09.2008) US
12/212,214 17 September 2008 (17.09.2008) US

(71) Applicant *(for all designated States except US)*: **APPLIED MATERIALS, INC.** [US/US]; 3050 Bowers Avenue, Santa Clara, California 95054 (US).

(72) Inventors; and

(75) Inventors/Applicants *(for US only)*: **MOFFATT, Stephen** [GB/GB]; Seafield Coach House, Millbrook St. Lawrence Jersey, Channel Islands JE3 1LL (GB). **MAYUR, Abhilash, J.** [US/US]; 17651 Olson Place, Salinas, California 93907 (US). **RAMAMURTHY, Sundar** [US/US]; 48575 Spokane Road, Fremont, California 94539 (US). **RANISH, Joseph** [US/US]; 375 Woodleaf Court, San Jose, California 95117 (US). **HUNTER, Aaron** [US/US]; 430 Emeline Avenue, Santa Cruz, California 95060 (US).

(74) Agents: **PATTERSON, B. Todd** et al.; Patterson & Sheridan, L.L.P., 3040 Post Oak Blvd., Suite 1500, Houston, Texas 77056-6582 (US).

(81) Designated States *(unless otherwise indicated, for every kind of national protection available)*: AE, AG, AL, AM, AO, AT, AU, AZ, BA, BB, BG, BH, BR, BW, BY, BZ, CA, CH, CL, CN, CO, CR, CU, CZ, DE, DK, DM, DO, DZ, EC, EE, EG, ES, FI, GB, GD, GE, GH, GM, GT, HN, HR, HU, ID, IL, IN, IS, JP, KE, KG, KM, KN, KP, KR, KZ, LA, LC, LK, LR, LS, LT, LU, LY, MA, MD, ME, MG, MK, MN, MW, MX, MY, MZ, NA, NG, NI, NO, NZ, OM, PE, PG, PH, PL, PT, RO, RS, RU, SC, SD, SE, SG, SK, SL, SM, ST, SV, SY, TJ, TM, TN, TR, TT, TZ, UA, UG, US, UZ, VC, VN, ZA, ZM, ZW.

(84) Designated States *(unless otherwise indicated, for every kind of regional protection available)*: ARIPO (BW, GH, GM, KE, LS, MW, MZ, NA, SD, SL, SZ, TZ, UG, ZM,

[Continued on next page]

(54) Title: MANAGING THERMAL BUDGET IN ANNEALING OF SUBSTRATES

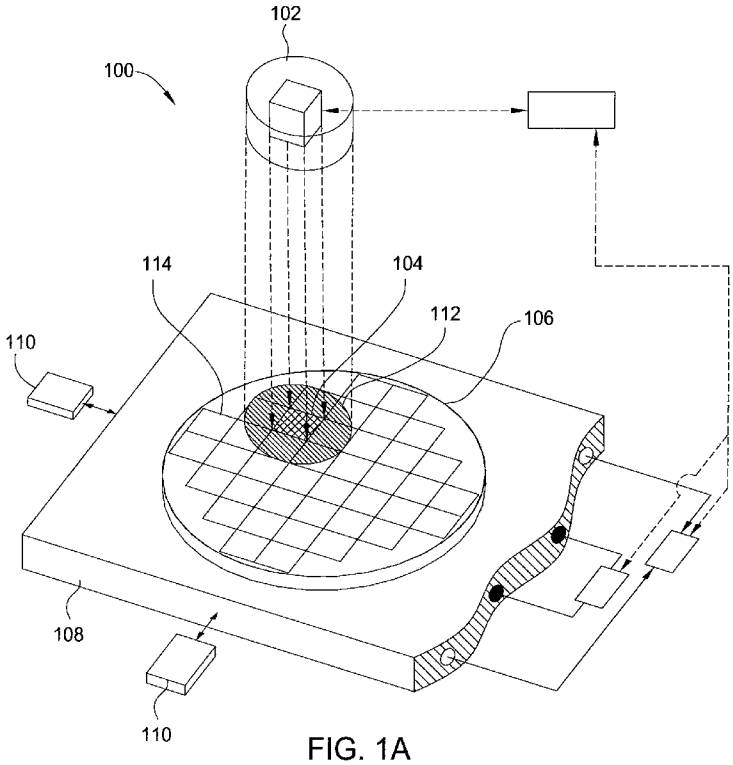

FIG. 1A

(57) Abstract: A method and apparatus are provided for treating a substrate. The substrate is positioned on a support in a thermal treatment chamber. Electromagnetic radiation is directed toward the substrate to anneal a portion of the substrate. Other electromagnetic radiation is directed toward the substrate to preheat a portion of the substrate. The preheating reduces thermal stresses at the boundary between the preheat region and the anneal region. Any number of anneal and preheat regions are contemplated, with varying shapes and temperature profiles, as needed for specific embodiments. Any convenient source of electromagnetic radiation may be used, such as lasers, heat lamps, white light lamps, or flash lamps.

WO 2010/033389 A1

ZW), Eurasian (AM, AZ, BY, KG, KZ, MD, RU, TJ, TM), European (AT, BE, BG, CH, CY, CZ, DE, DK, EE, ES, FI, FR, GB, GR, HR, HU, IE, IS, IT, LT, LU, LV, MC, MK, MT, NL, NO, PL, PT, RO, SE, SI, SK, SM, TR), OAPI (BF, BJ, CF, CG, CI, CM, GA, GN, GQ, GW, ML, MR, NE, SN, TD, TG).

Published:

— *with international search report (Art. 21(3))*

— *before the expiration of the time limit for amending the claims and to be republished in the event of receipt of amendments (Rule 48.2(h))*