(12) INTERNATIONAL APPLICATION PUBLISHED UNDER THE PATENT COOPERATION TREATY (PCT)

(19) World Intellectual Property Organization
International Bureau

(43) International Publication Date
13 September 2007 (13.09.2007)

PCT

(10) International Publication Number
WO 2007/102001 A1

(51) International Patent Classification:
*G08B 15/00* (2006.01) *H04N 7/18* (2006.01)
*G08B 25/08* (2006.01) *G10L 15/26* (2006.01)
*H04M 1/02* (2006.01)

(21) International Application Number:
PCT/GB2007/000795

(22) International Filing Date: 7 March 2007 (07.03.2007)

(25) Filing Language: English

(26) Publication Language: English

(30) Priority Data:
0604559.5 7 March 2006 (07.03.2006) GB

(71) Applicant and
(72) Inventor: **HAYWOOD, Helen, Theresa** [GB/GB]; Thrums, Fowes Lane, Belchamp Otten, Sudbury CO10 7BQ (GB).

(74) Agent: **I.P. 21 LIMITED**; Norwich Research Park, Colney, Norwich NR4 7UT (GB).

(81) Designated States *(unless otherwise indicated, for every kind of national protection available)*: AE, AG, AL, AM, AT, AU, AZ, BA, BB, BG, BR, BW, BY, BZ, CA, CH, CN, CO, CR, CU, CZ, DE, DK, DM, DZ, EC, EE, EG, ES, FI, GB, GD, GE, GH, GM, GT, HN, HR, HU, ID, IL, IN, IS, JP, KE, KG, KM, KN, KP, KR, KZ, LA, LC, LK, LR, LS, LT, LU, LY, MA, MD, MG, MK, MN, MW, MX, MY, MZ, NA, NG, NI, NO, NZ, OM, PG, PH, PL, PT, RO, RS, RU, SC, SD, SE, SG, SK, SL, SM, SV, SY, TJ, TM, TN, TR, TT, TZ, UA, UG, US, UZ, VC, VN, ZA, ZM, ZW.

(84) Designated States *(unless otherwise indicated, for every kind of regional protection available)*: ARIPO (BW, GH, GM, KE, LS, MW, MZ, NA, SD, SL, SZ, TZ, UG, ZM, ZW), Eurasian (AM, AZ, BY, KG, KZ, MD, RU, TJ, TM), European (AT, BE, BG, CH, CY, CZ, DE, DK, EE, ES, FI, FR, GB, GR, HU, IE, IS, IT, LT, LU, LV, MC, MT, NL, PL, PT, RO, SE, SI, SK, TR), OAPI (BF, BJ, CF, CG, CI, CM, GA, GN, GQ, GW, ML, MR, NE, SN, TD, TG).

**Declaration under Rule 4.17:**
— *of inventorship (Rule 4.17(iv))*

**Published:**
— *with international search report*

*For two-letter codes and other abbreviations, refer to the "Guidance Notes on Codes and Abbreviations" appearing at the beginning of each regular issue of the PCT Gazette.*

(54) **Title:** A SECURITY DEVICE COMPRISING A PLURALITY OF INTERFACES

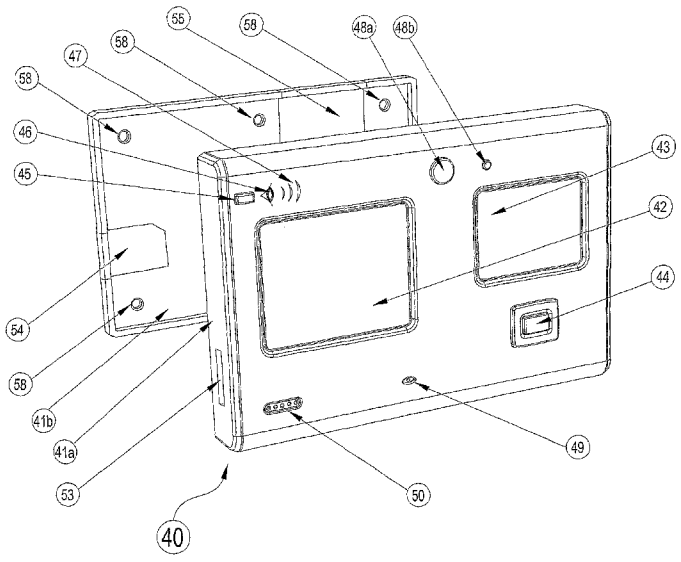


(57) **Abstract:** A security device comprising interfacing means incorporating a speaker (50) and a microphone (49) for interfacing with a person; a mobile network transmitter; an internet communication means; a controller which automatically responds to interaction with said interfacing means and firstly employs said mobile network transmitter to dial one or more predetermined phone numbers through a mobile network for directly establishing a two way communication across the mobile network; wherein said controller secondly employs said internet communication means for transmission through the internet of data captured by said interfacing means.

WO 2007/102001 A1