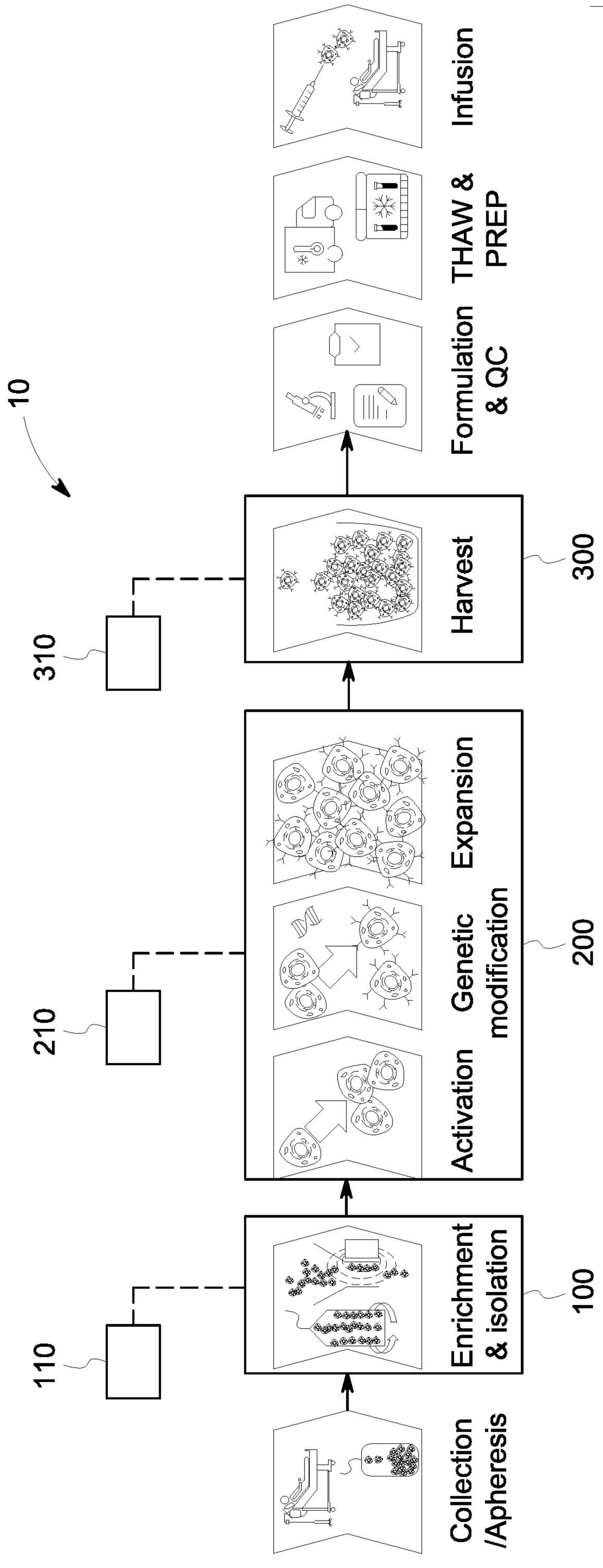
10
Infusion
THAW &
PREP
Formulation
& QC
300
Harvest
310
200
Expansion
Genetic
modification
Activation
210
100
Enrichment
& isolation
Collection
/Apheresis
110

FIG. 1

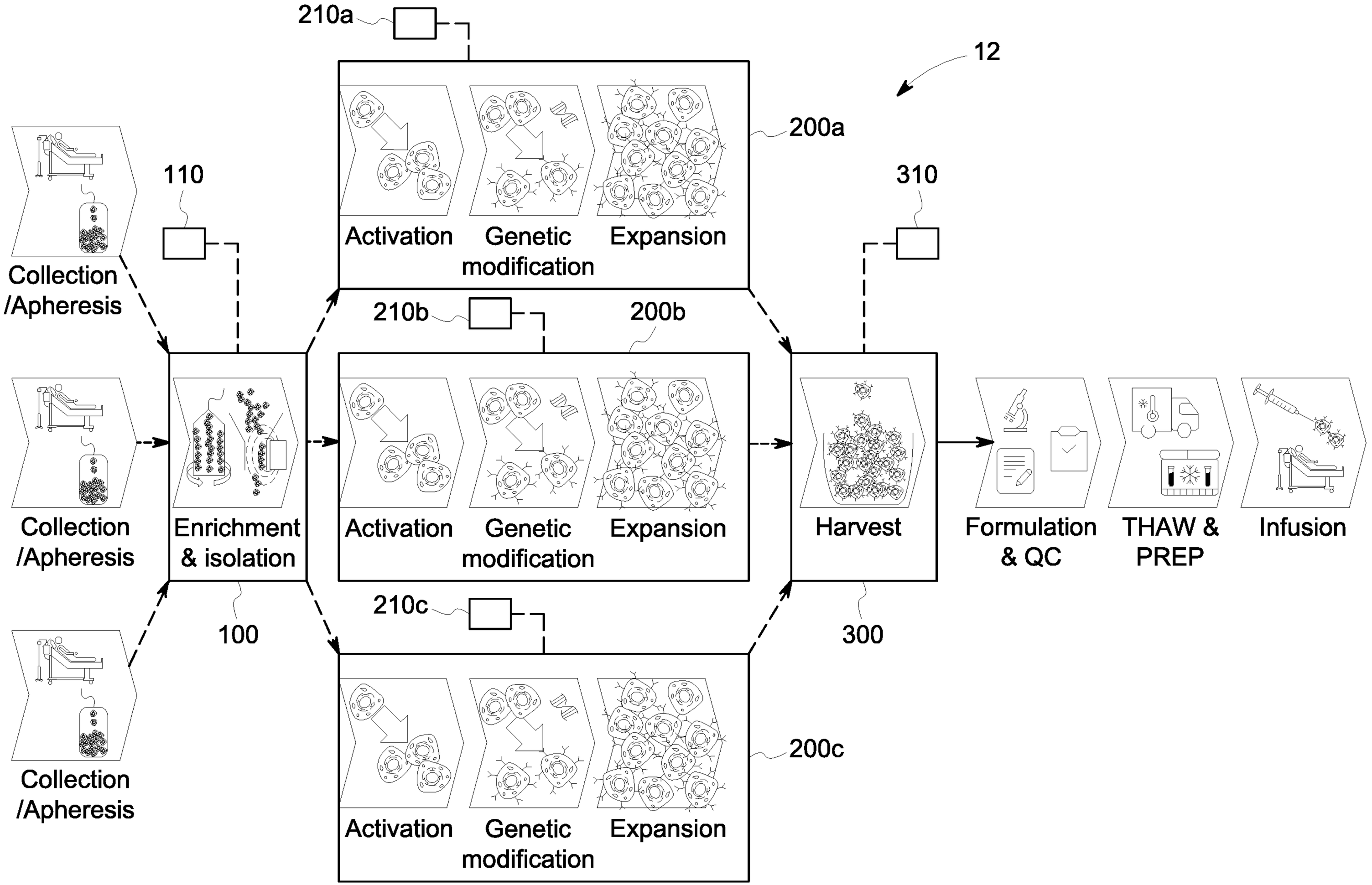
210a
12
200a
110
310
Collection
/Apheresis
Activation
Genetic
modification
Expansion
210b
200b
Collection
/Apheresis
Enrichment
& isolation
Activation
Genetic
modification
Expansion
Harvest
Formulation
& QC
THAW &
PREP
Infusion
210c
100
300
Collection
/Apheresis
200c
Activation
Genetic
modification
Expansion

FIG. 2

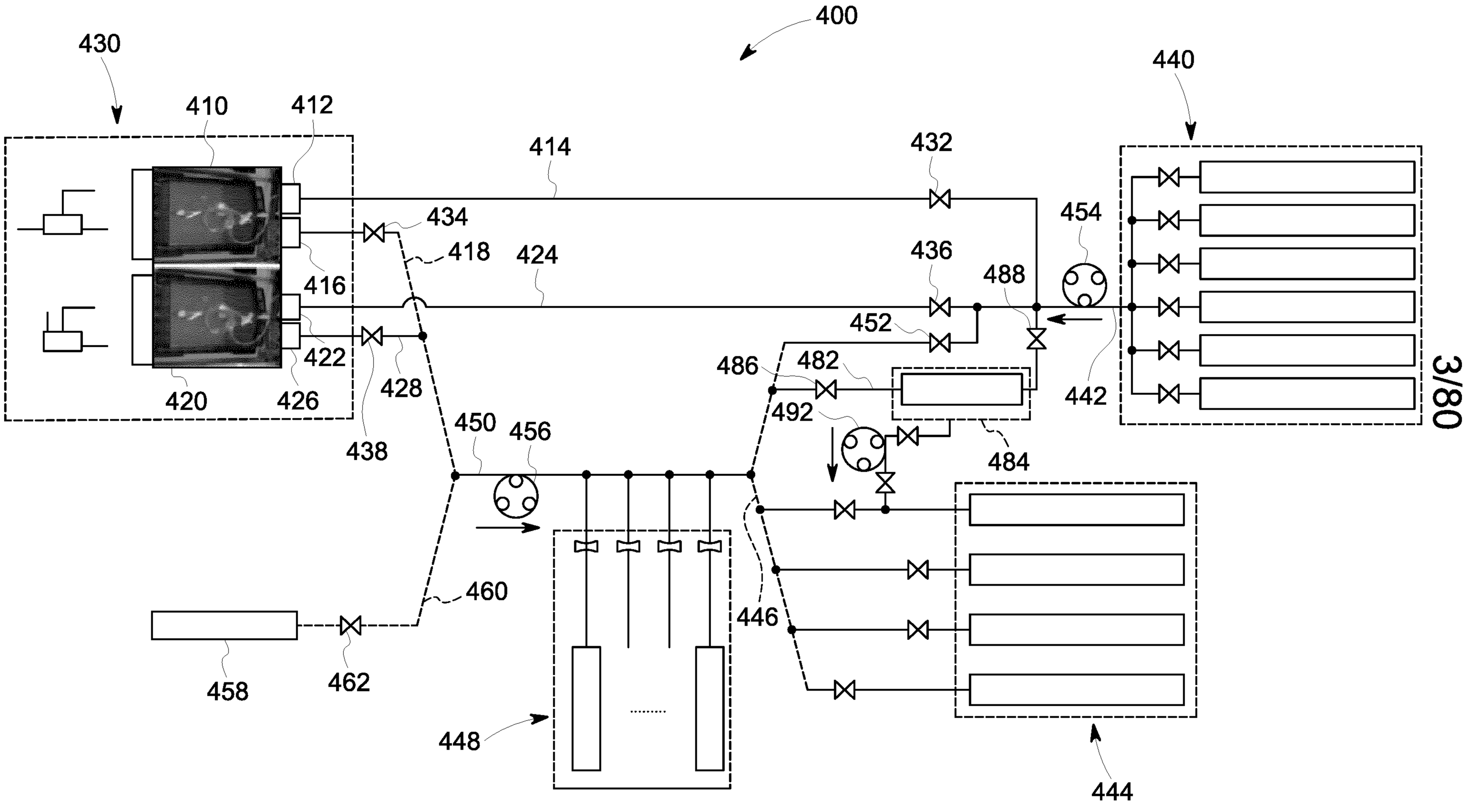
400
430
410
412
414
432
440
434
418
424
436
454
416
488
452
422
486
482
442
420
426
428
492
438
450
456
484
460
446
458
462
448
444

FIG. 3

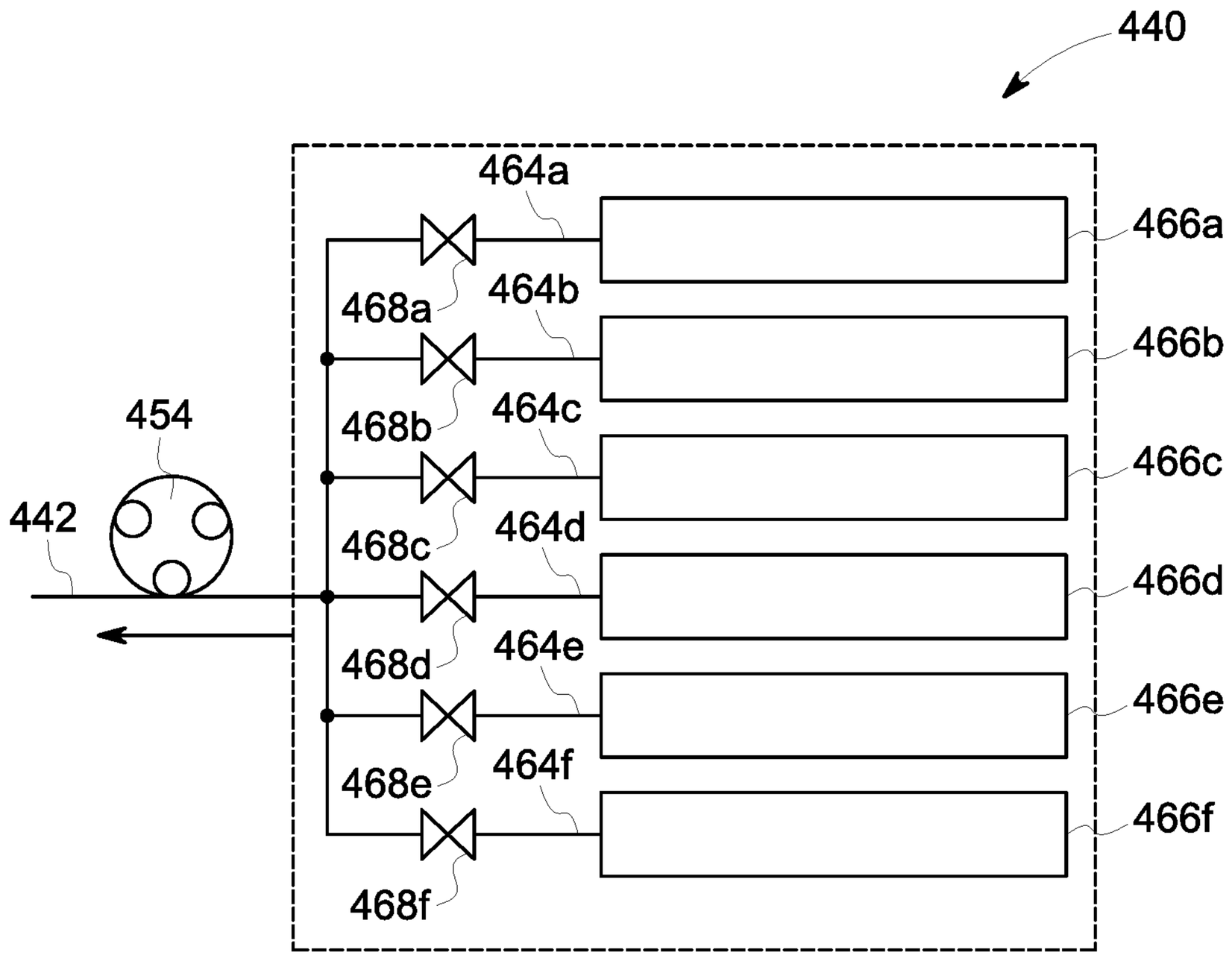
440
464a
466a
468a
464b
466b
454
468b
464c
466c
442
468c
464d
466d
468d
464e
466e
468e
464f
466f
468f

FIG. 4

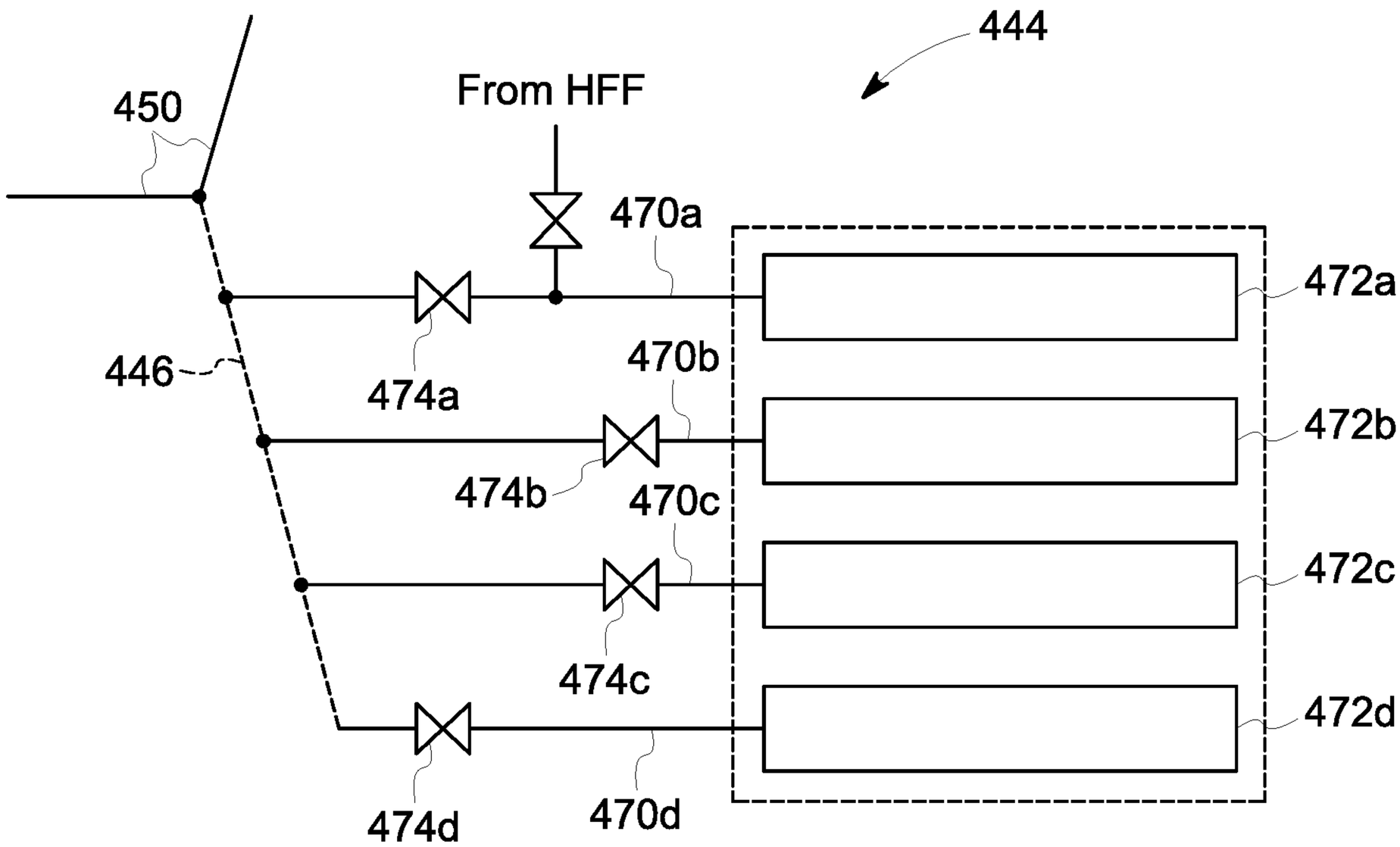
444
From HFF
450
470a
472a
446
474a
470b
472b
474b
470c
472c
474c
472d
474d
470d

FIG. 5

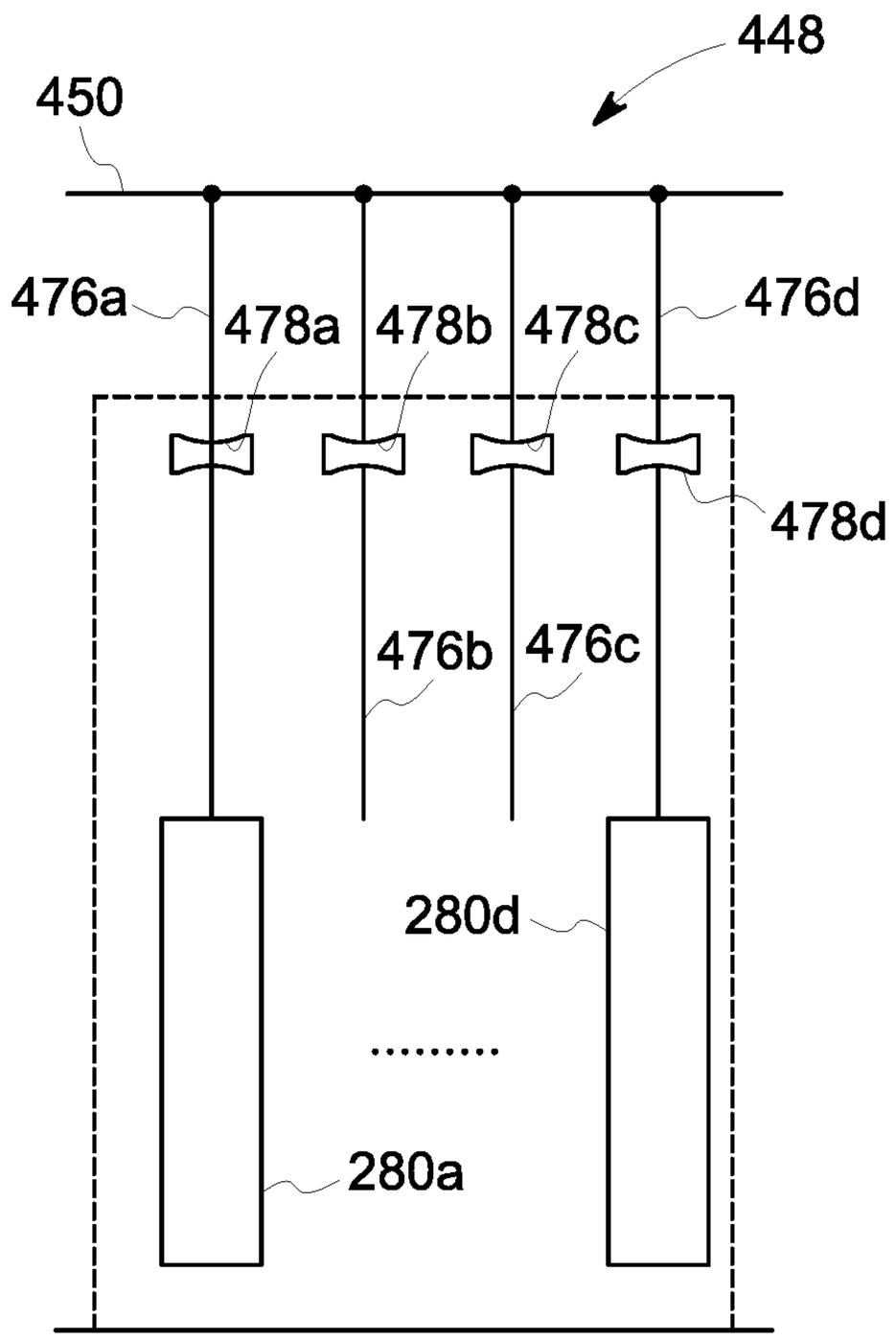
448
450
476a
478a
478b
478c
476d
478d
476b
476c
280d
.....
280a

FIG. 6

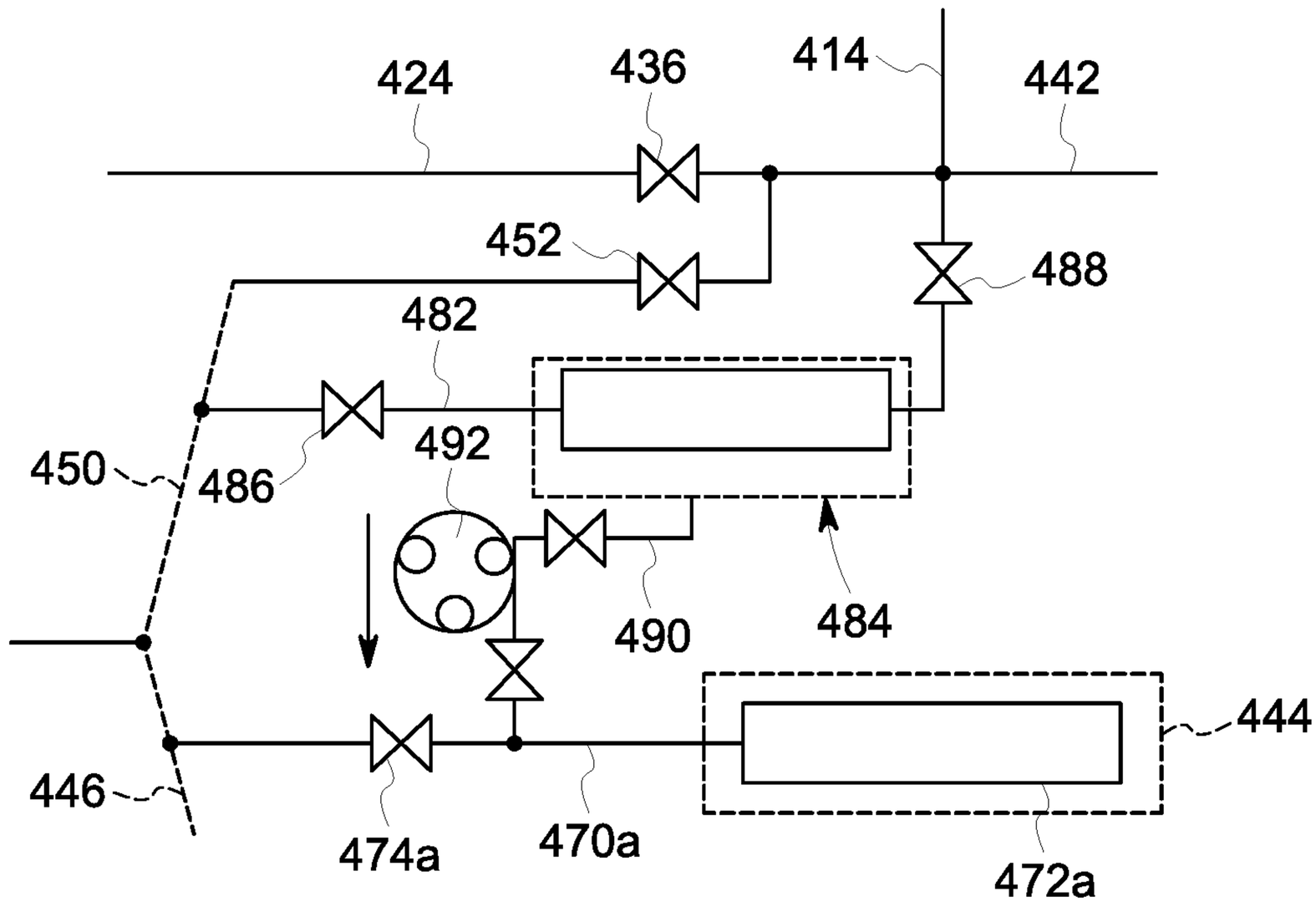
424
436
414
442
452
488
482
450
486
492
490
484
446
474a
470a
444
472a

FIG. 7

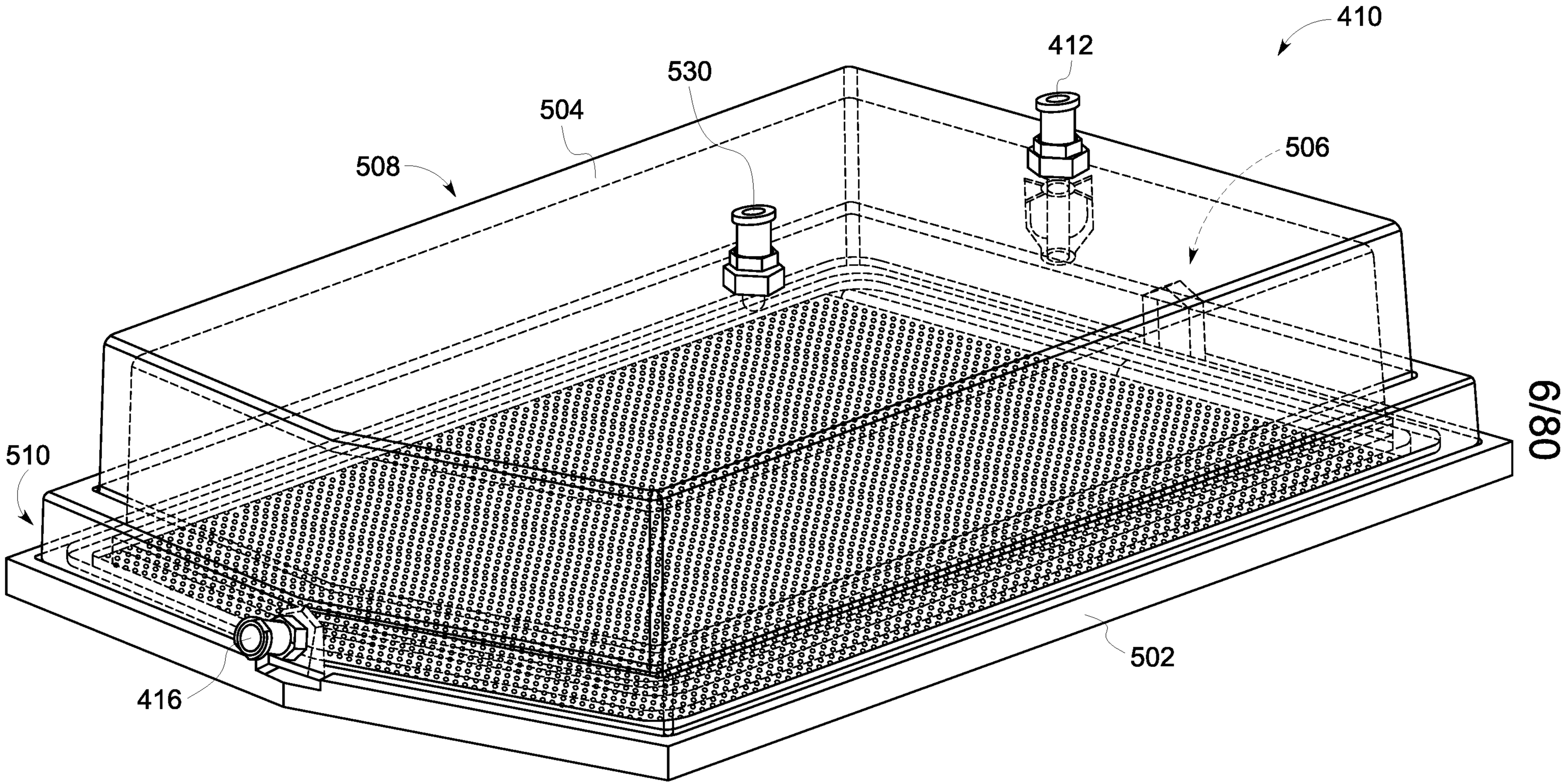

FIG. 8

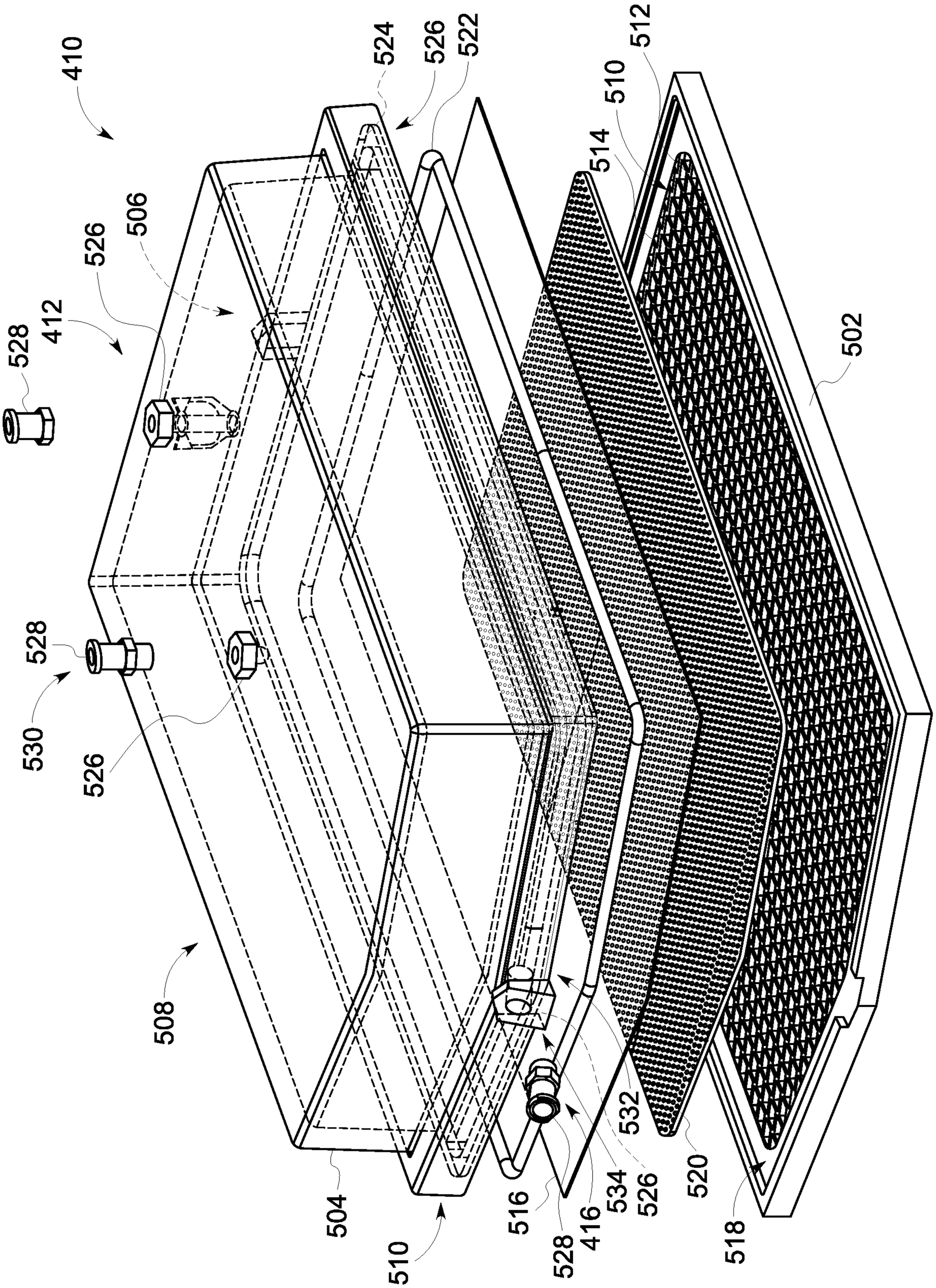
410
524
526
522
510
512
514
506
526
412
528
502
528
530
526
508
504
510
516
528
416
534
526
520
518
532

FIG. 9

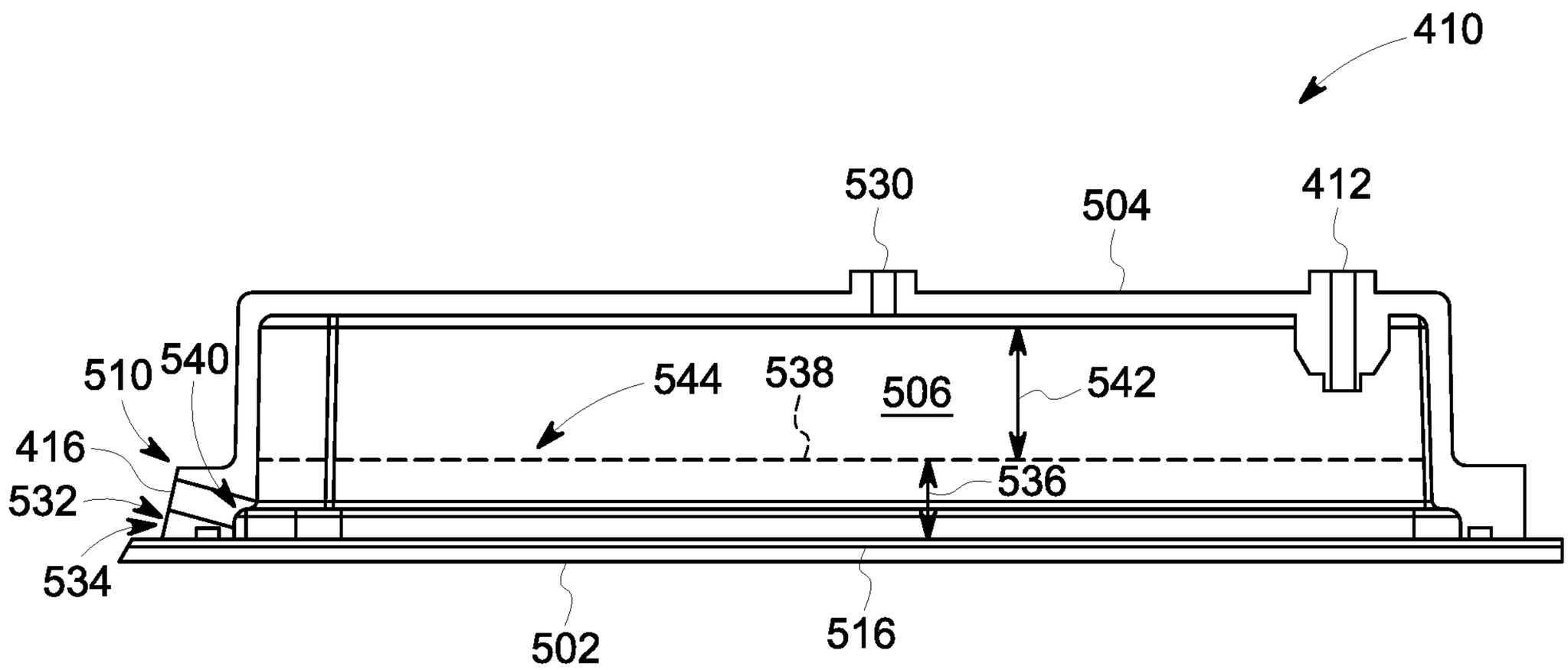

FIG. 10

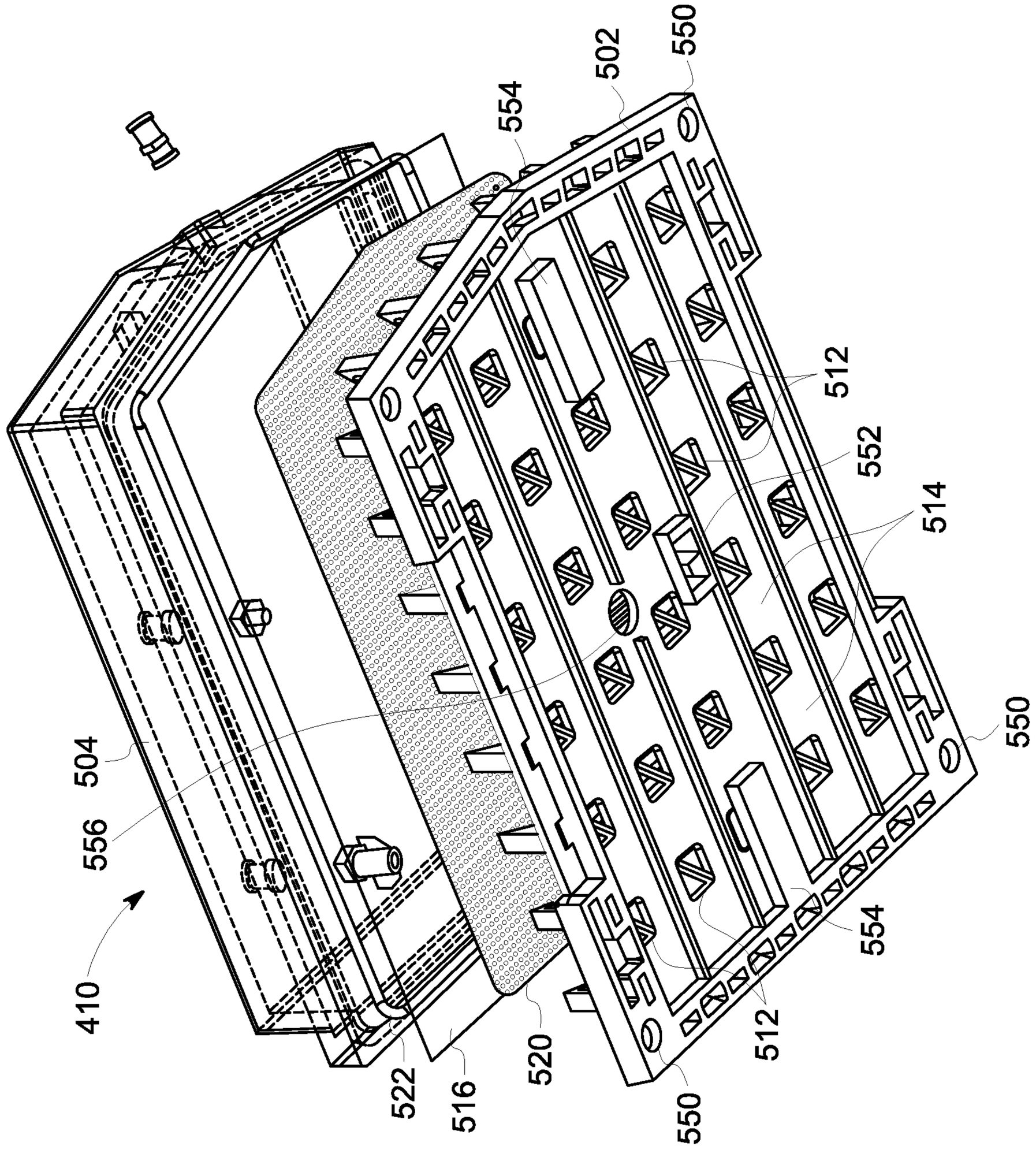

FIG. 11

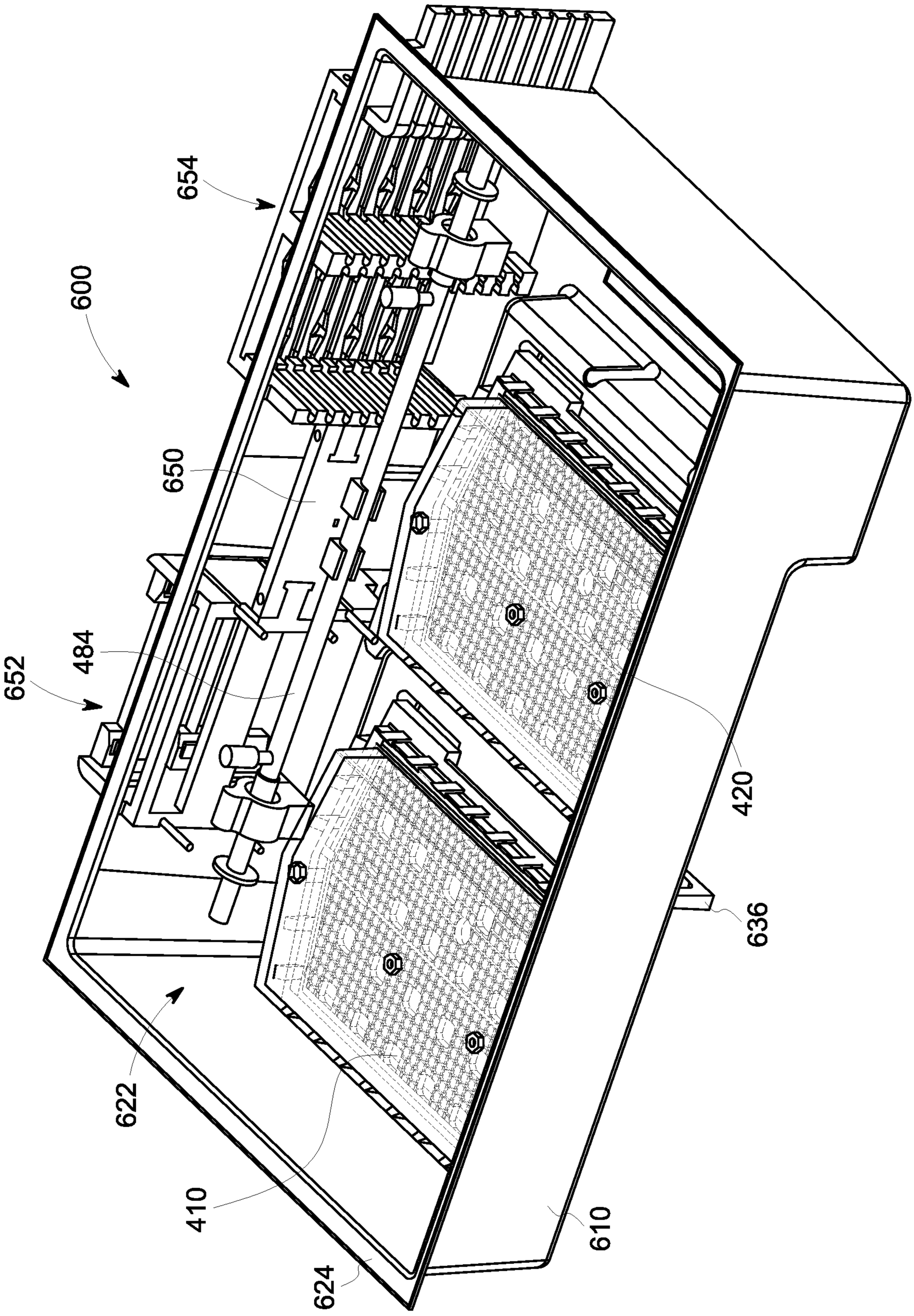

FIG. 12

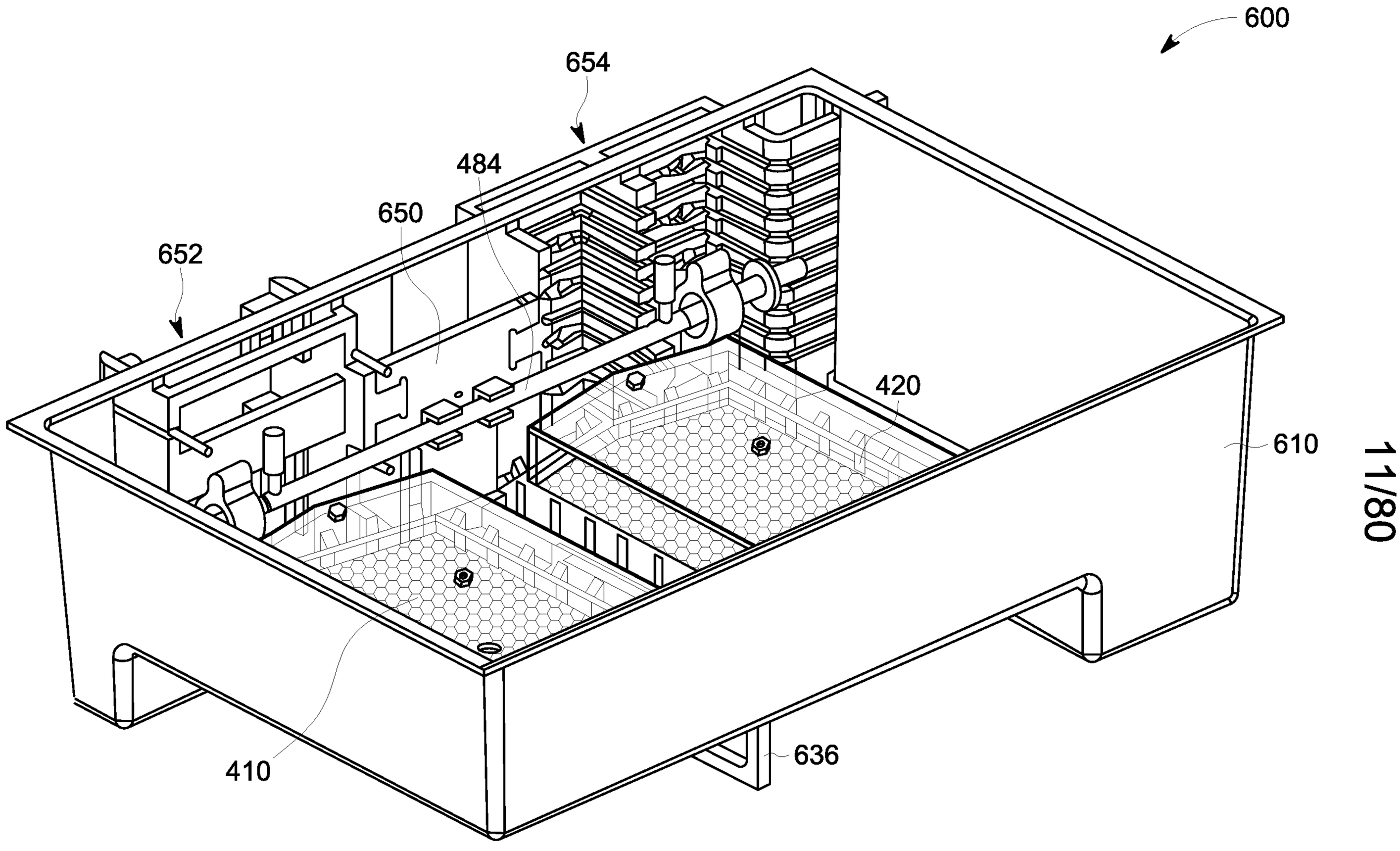

FIG. 13

12/80

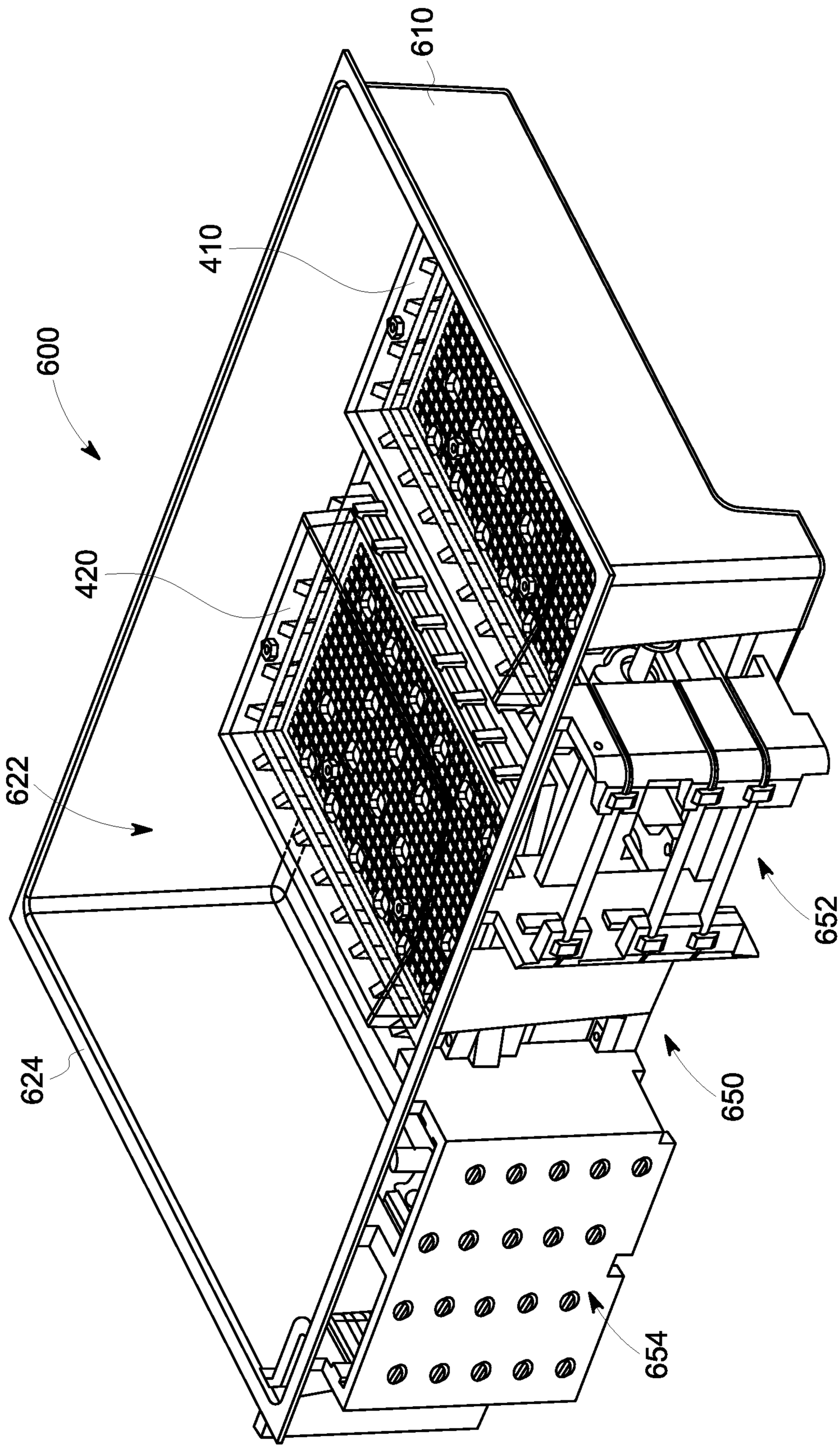

FIG. 14

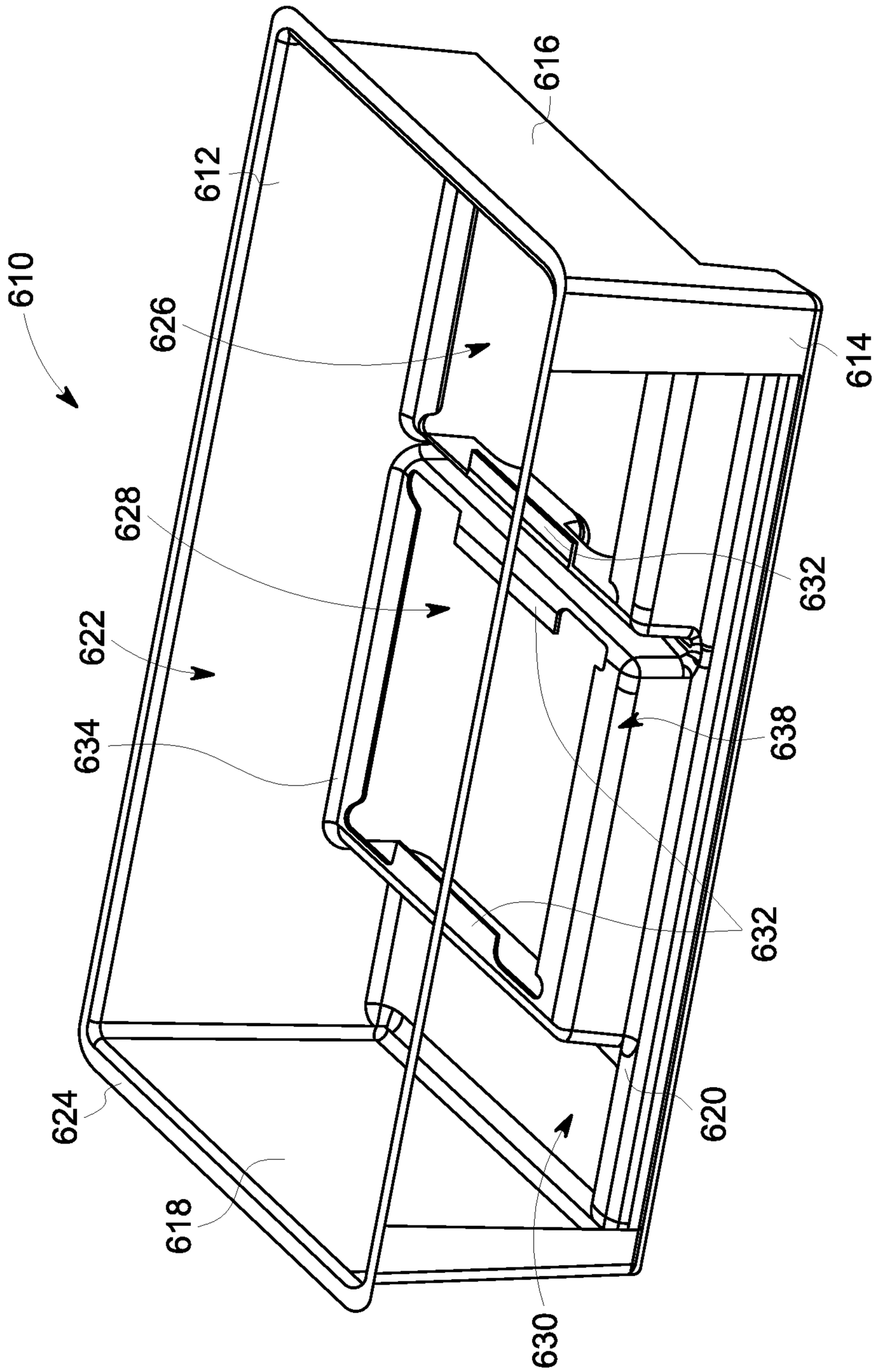

FIG. 15

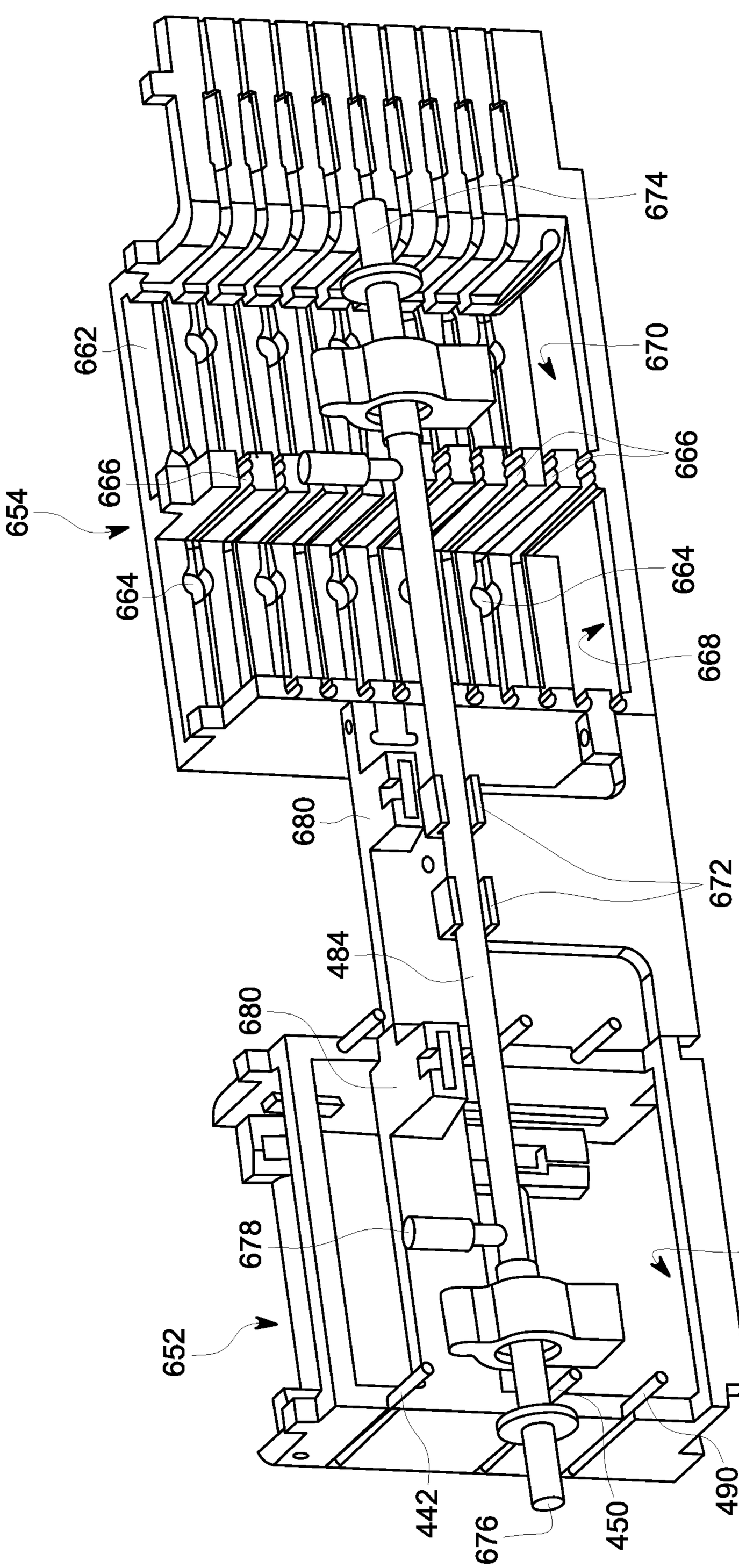
650
674
662
670
666
654
666
664
664
668
680
672
484
680
678
660
652
442
676
450
490

FIG. 16

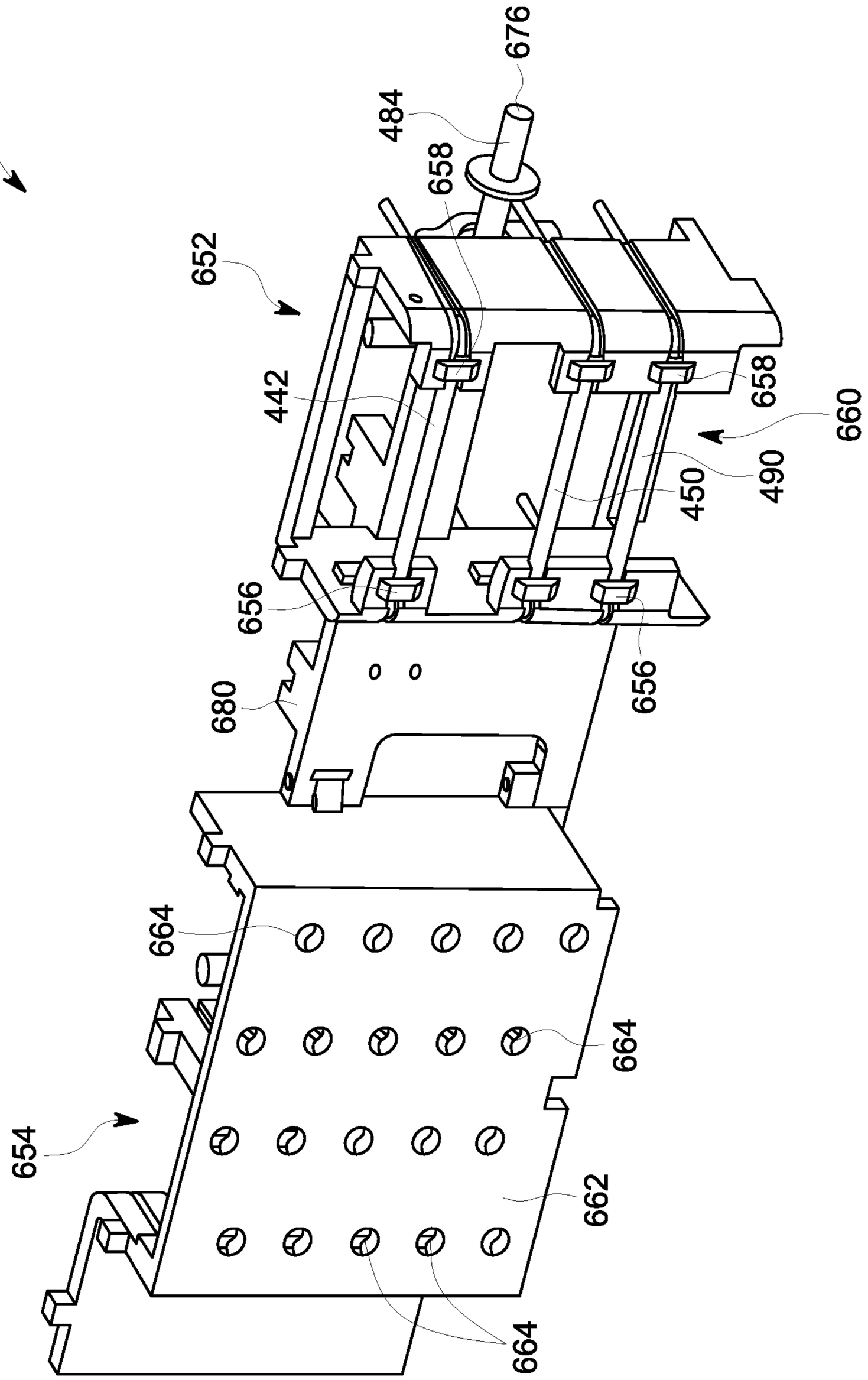
650
676
484
658
652
442
658
660
490
450
656
656
680
664
664
654
662
664

FIG. 17

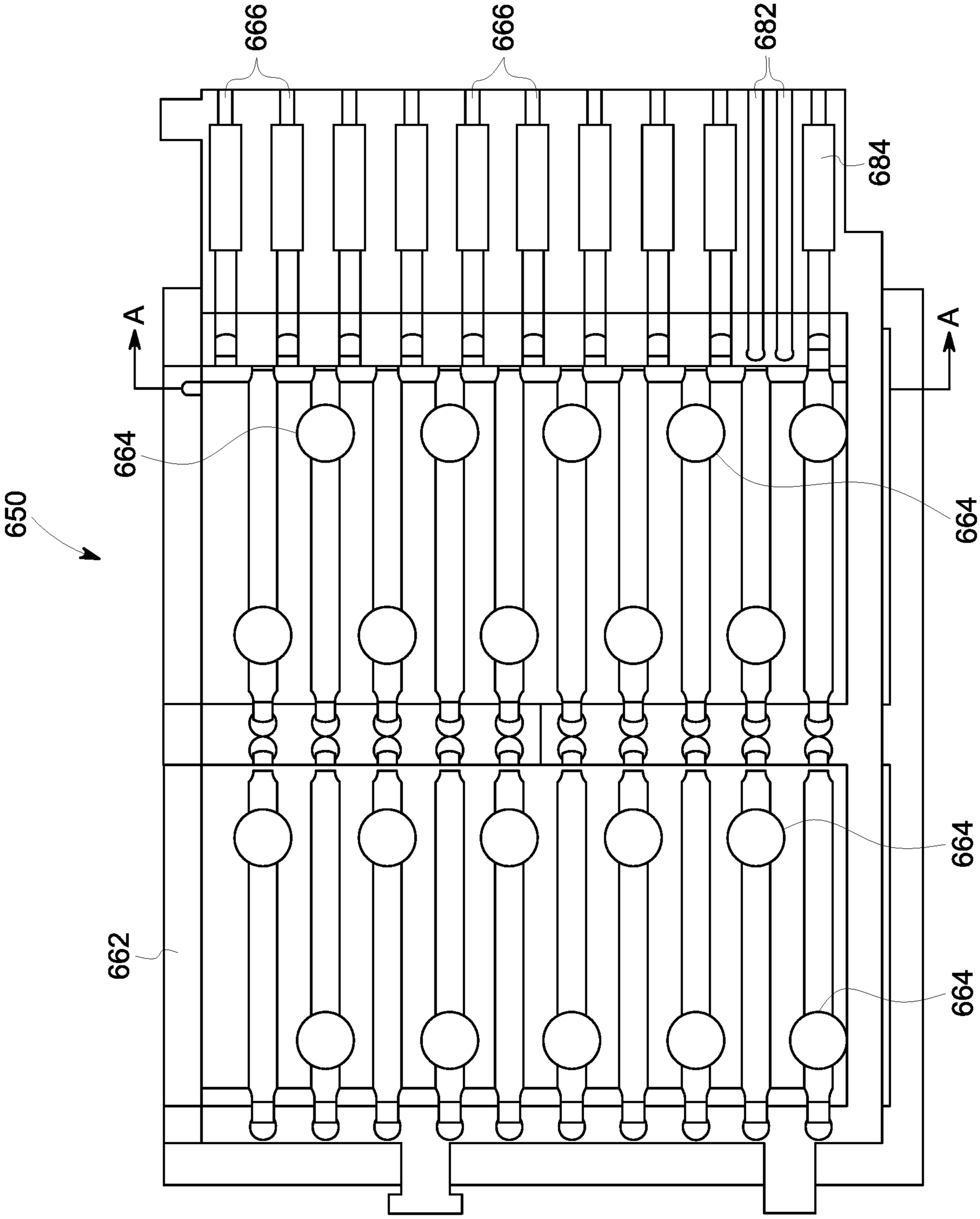

FIG. 18

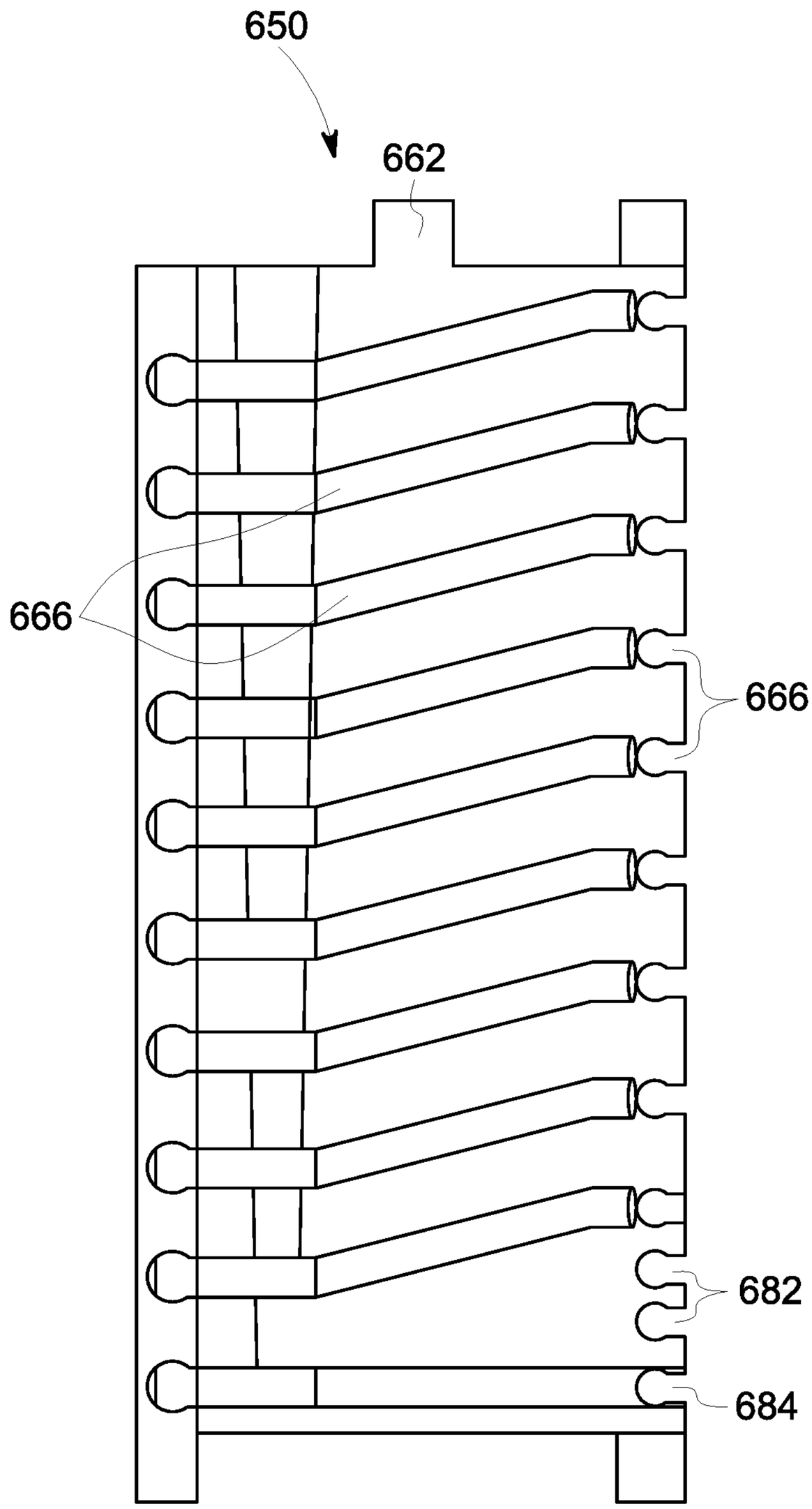

FIG. 19

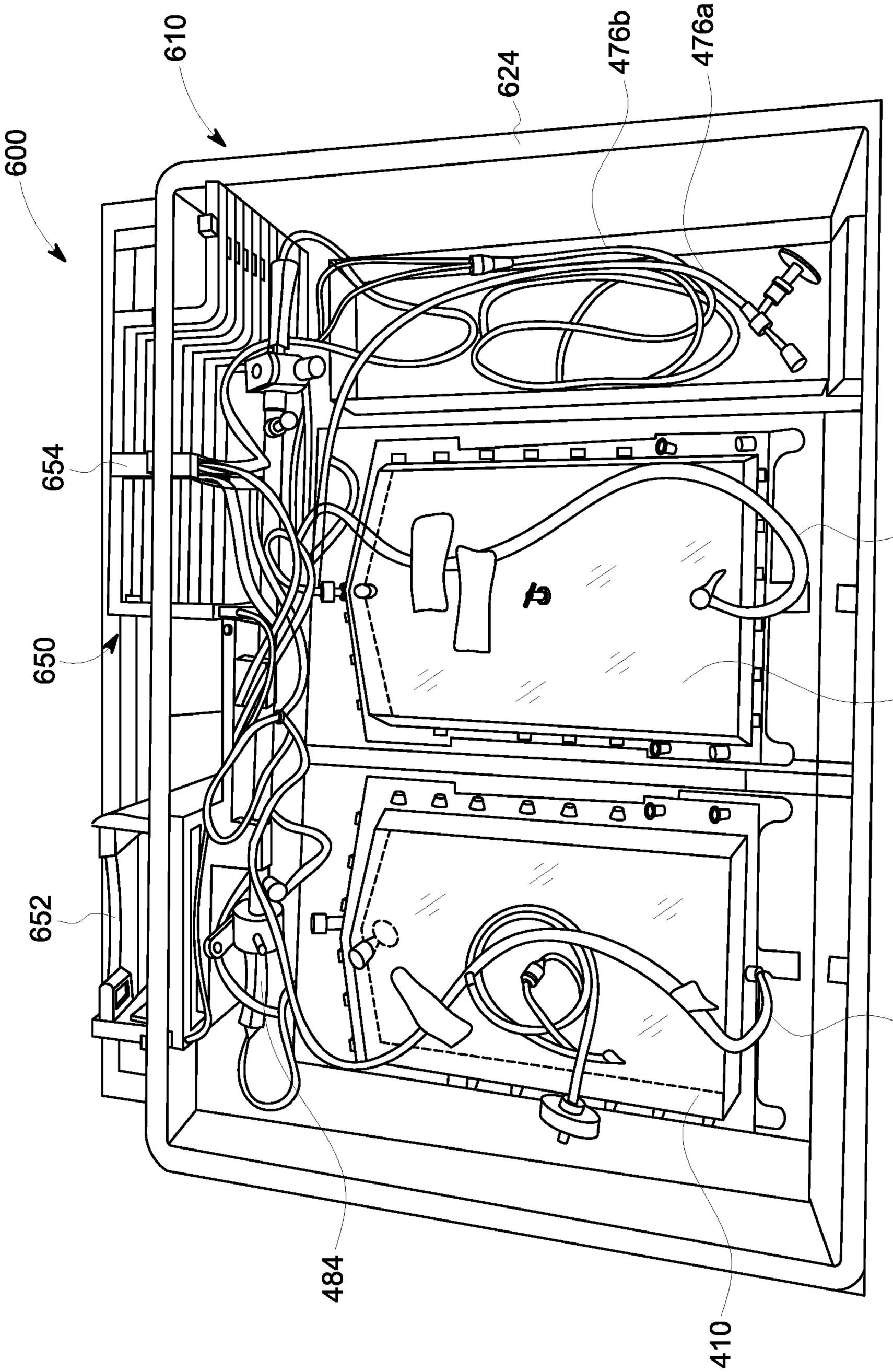

FIG. 20

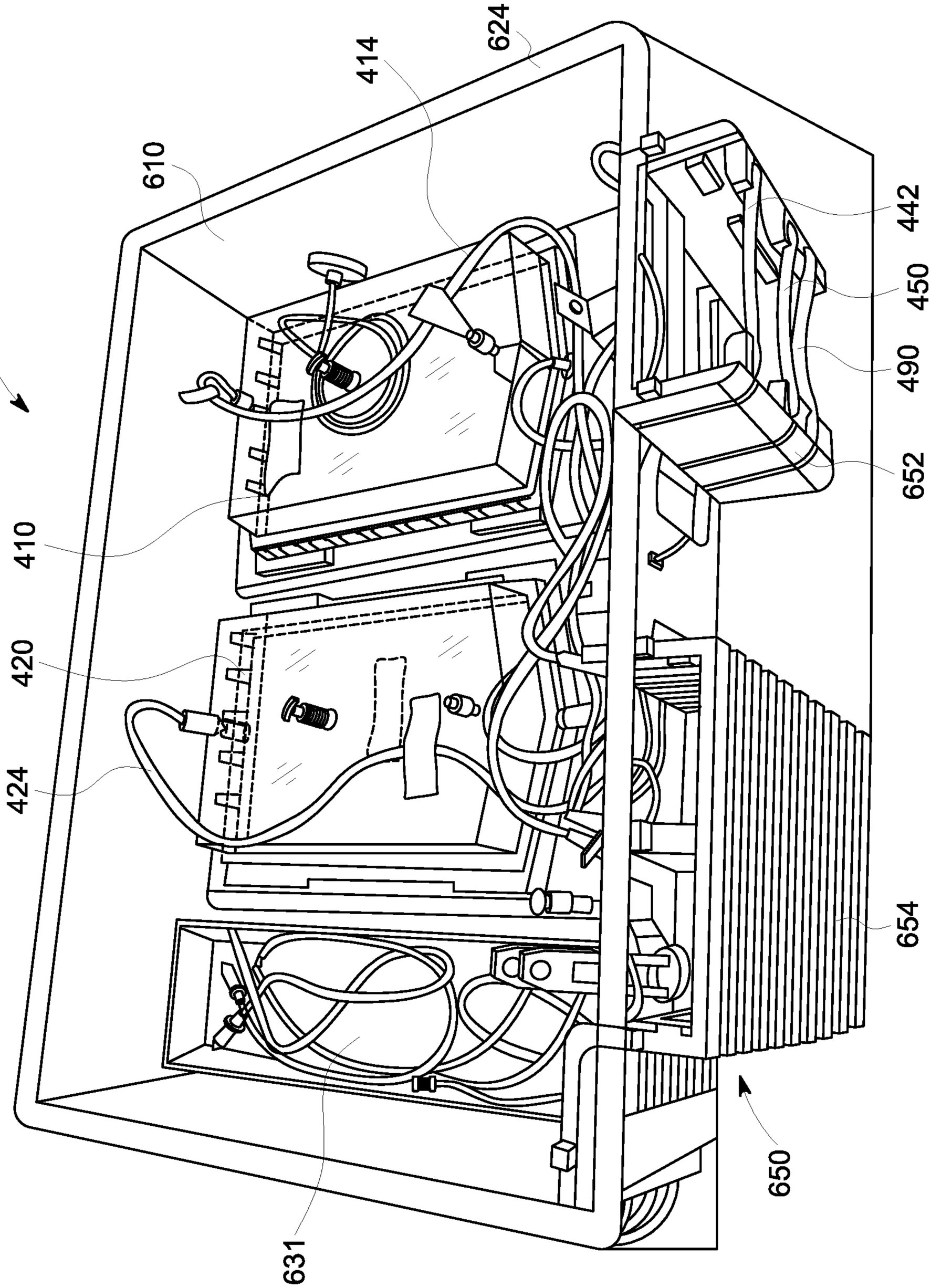

FIG. 21

20/80

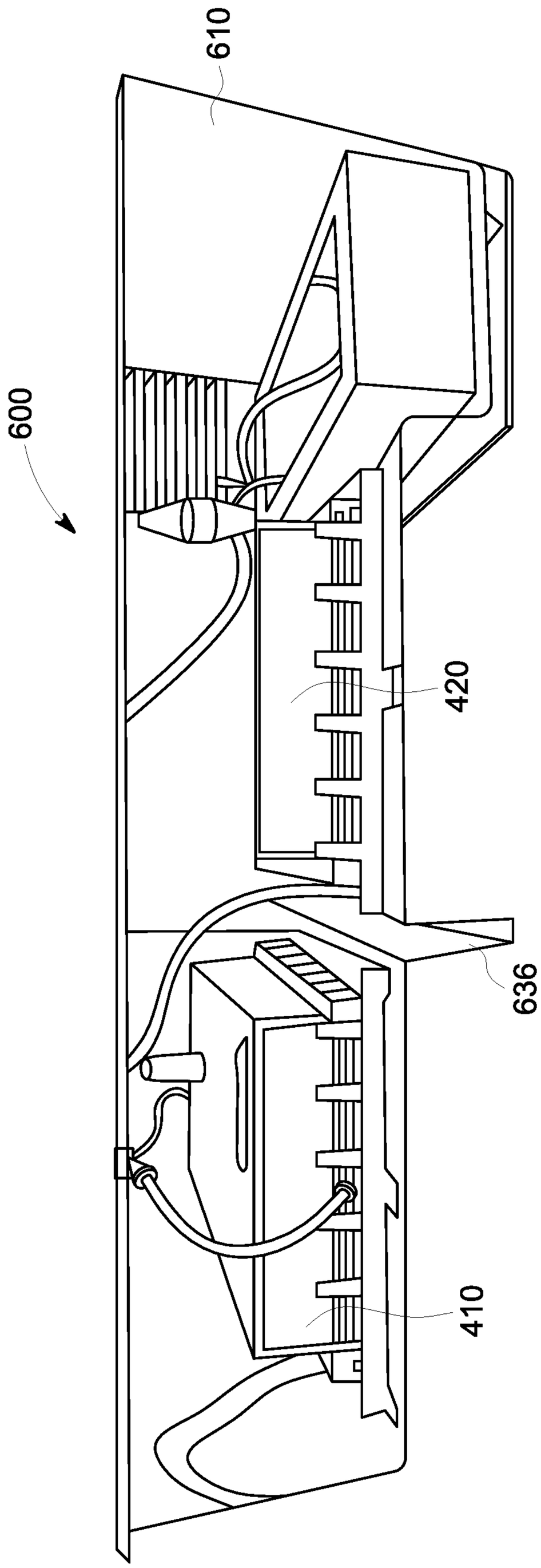

FIG. 22

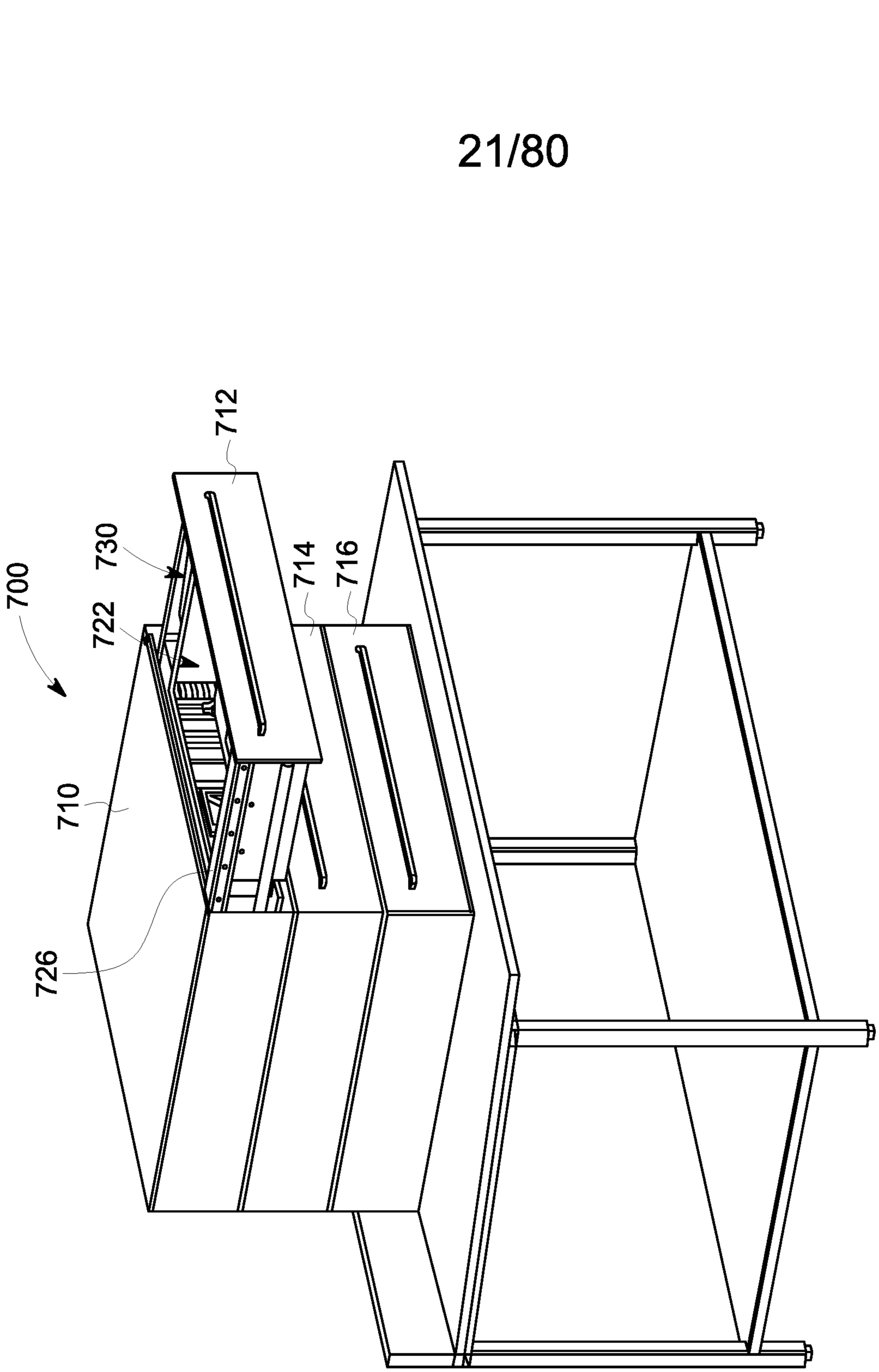

FIG. 23

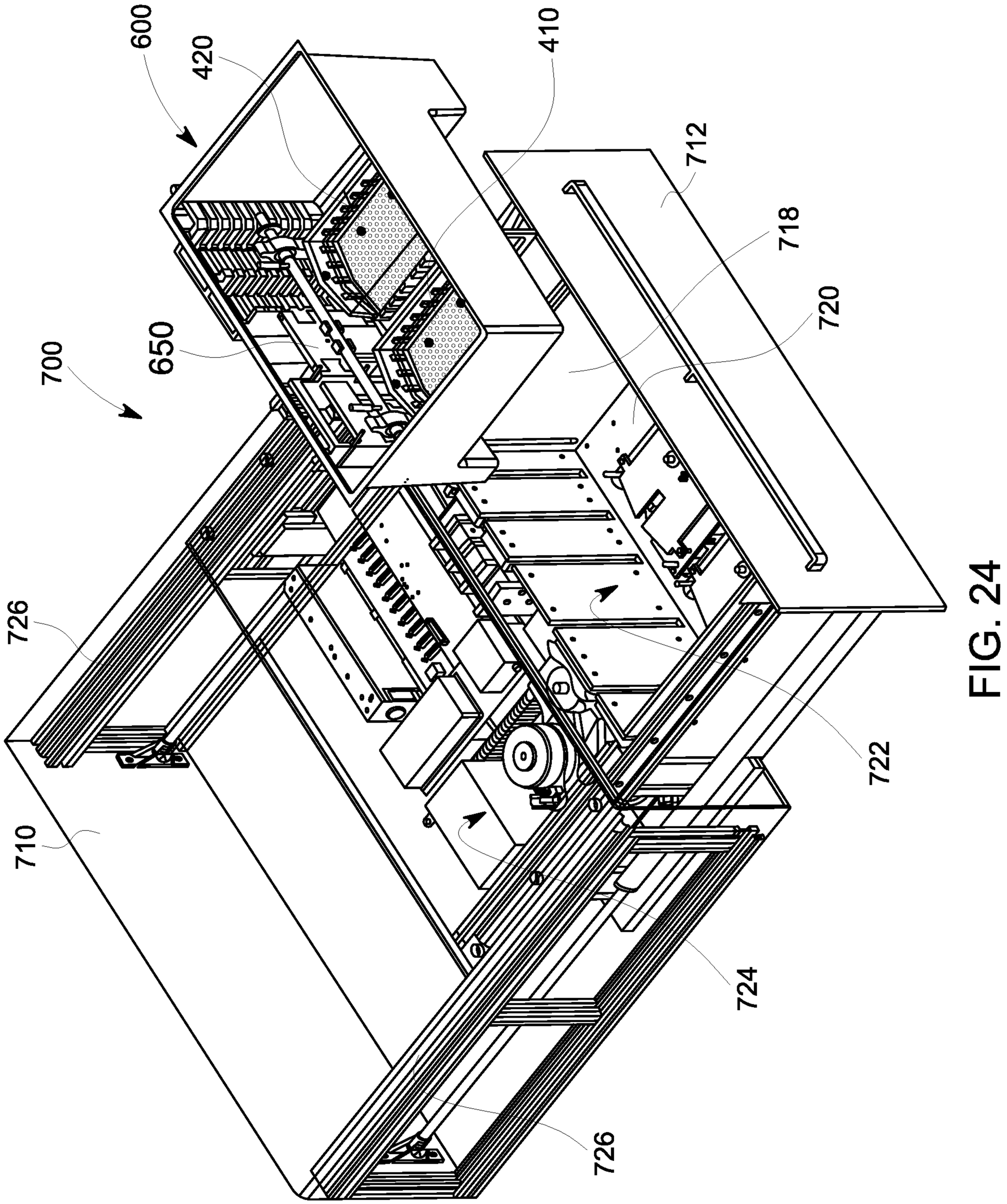

FIG. 24

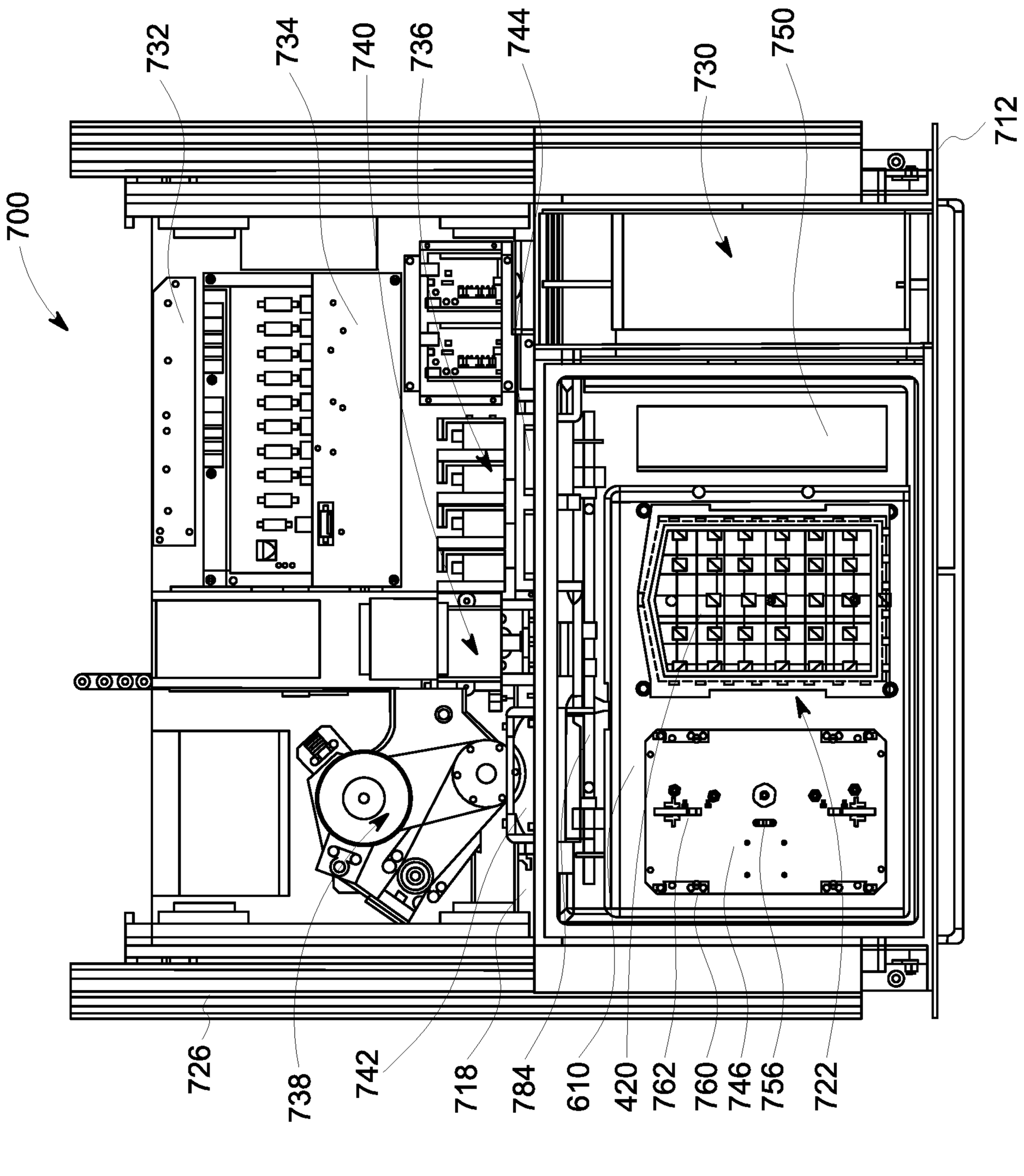
700
732
734
740
736
744
730
750
712
726
738
742
718
784
610
420
762
760
746
756
722

FIG. 25

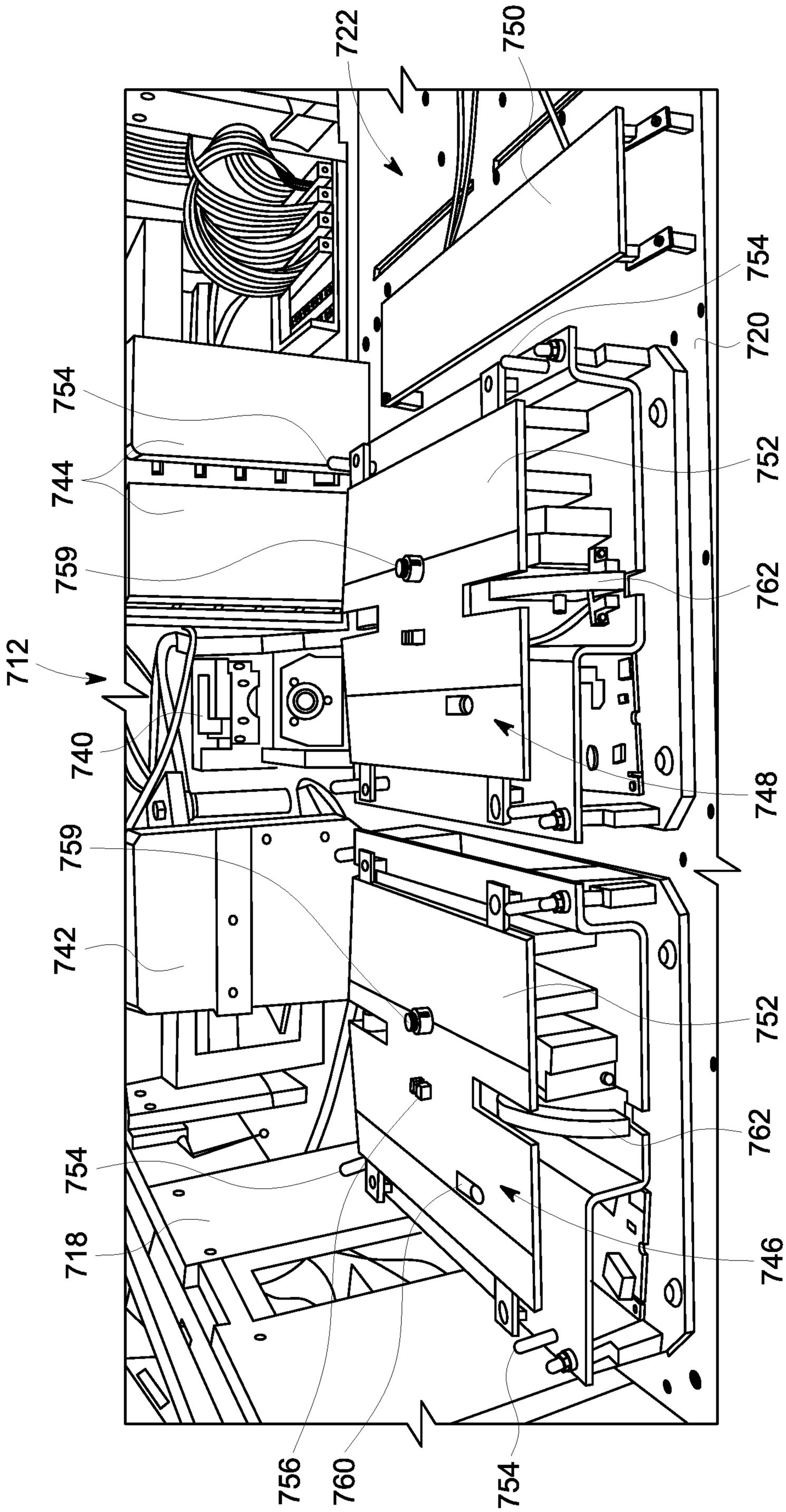
722
750
754
720
744
752
759
762
712
740
748
759
742
752
754
762
718
746
756
760
754

FIG. 26

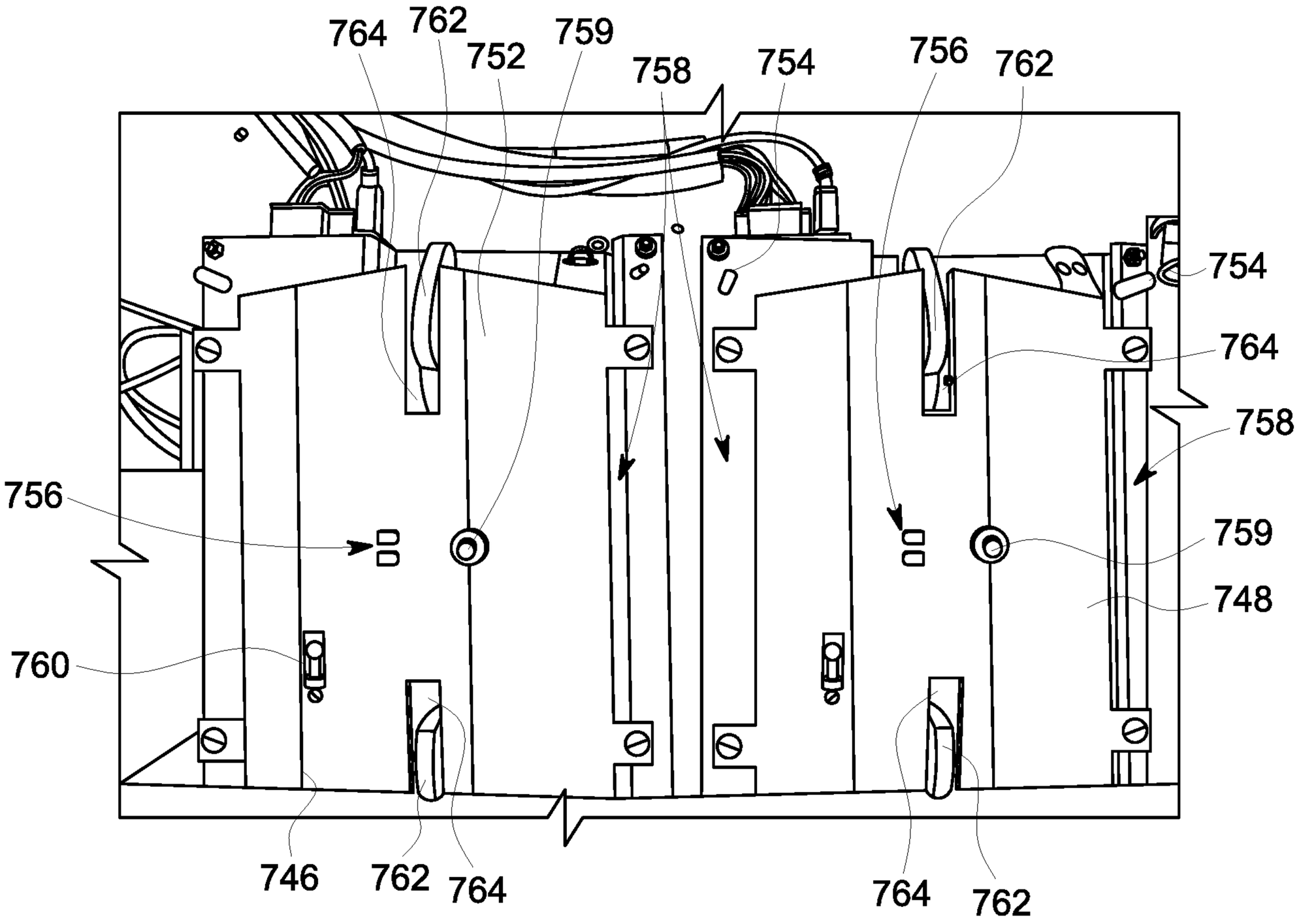
764
762
752
759
758
754
756
762
754
764
758
759
748
756
760
746
762
764
764
762

FIG. 27

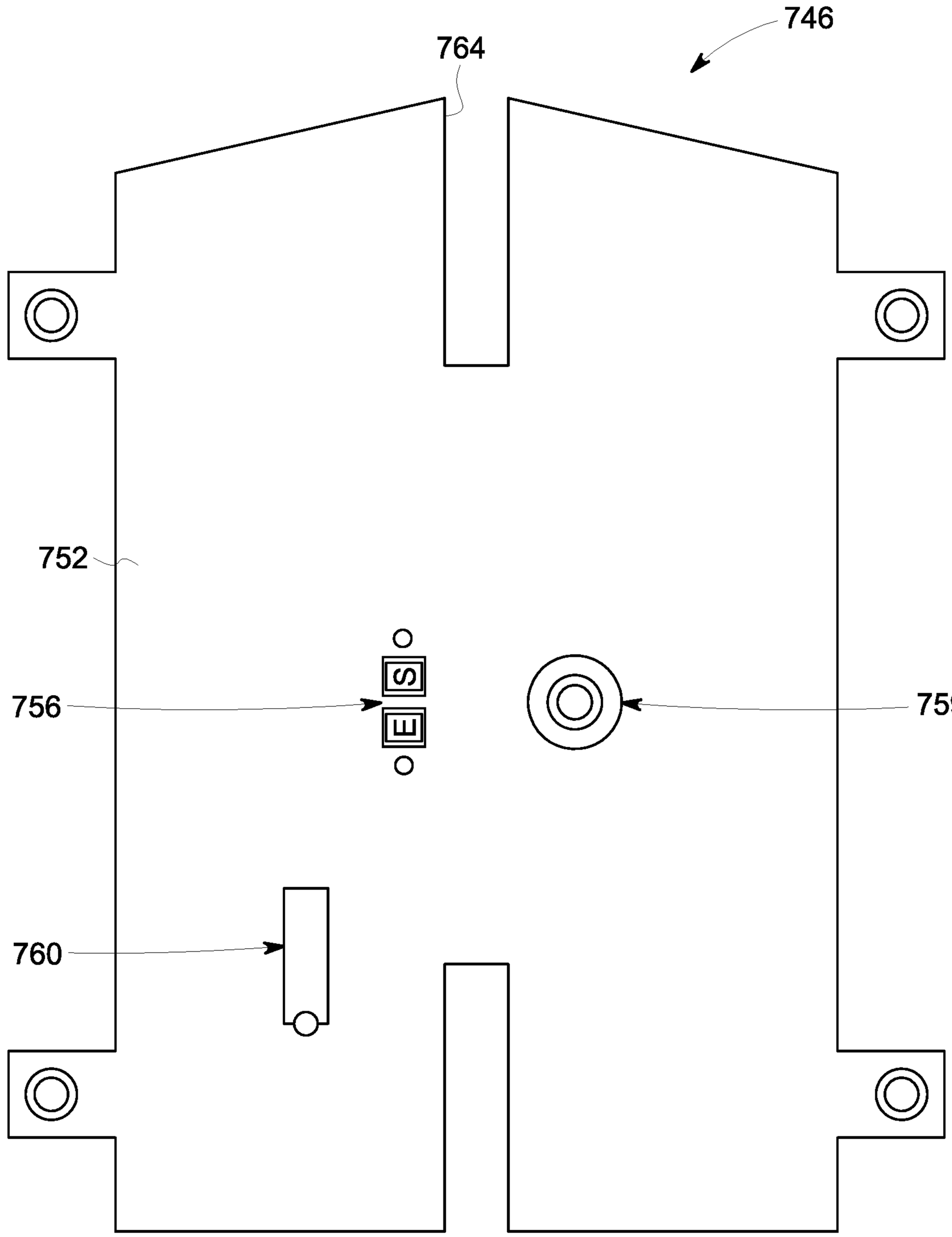

FIG. 28A

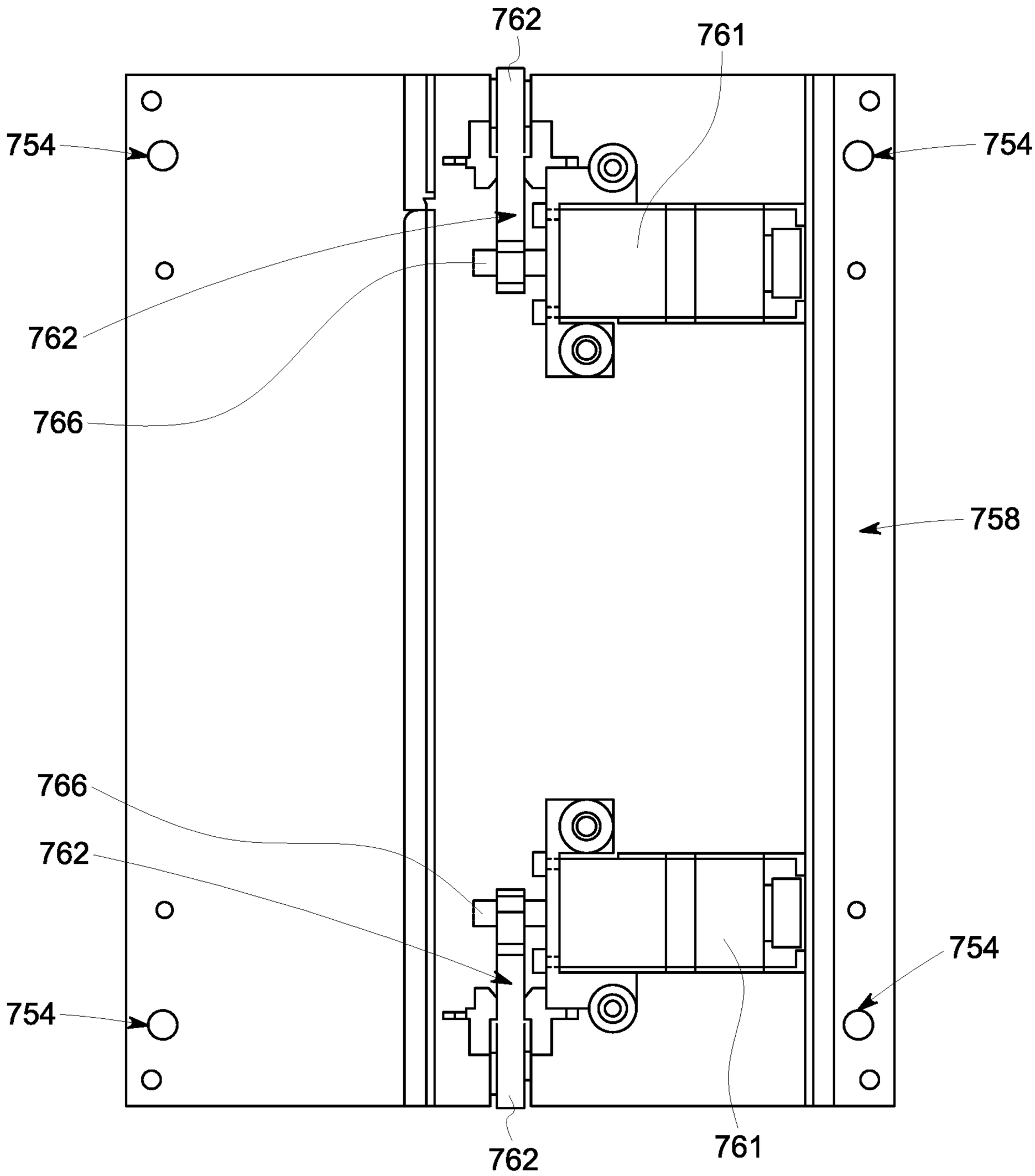

FIG. 28B

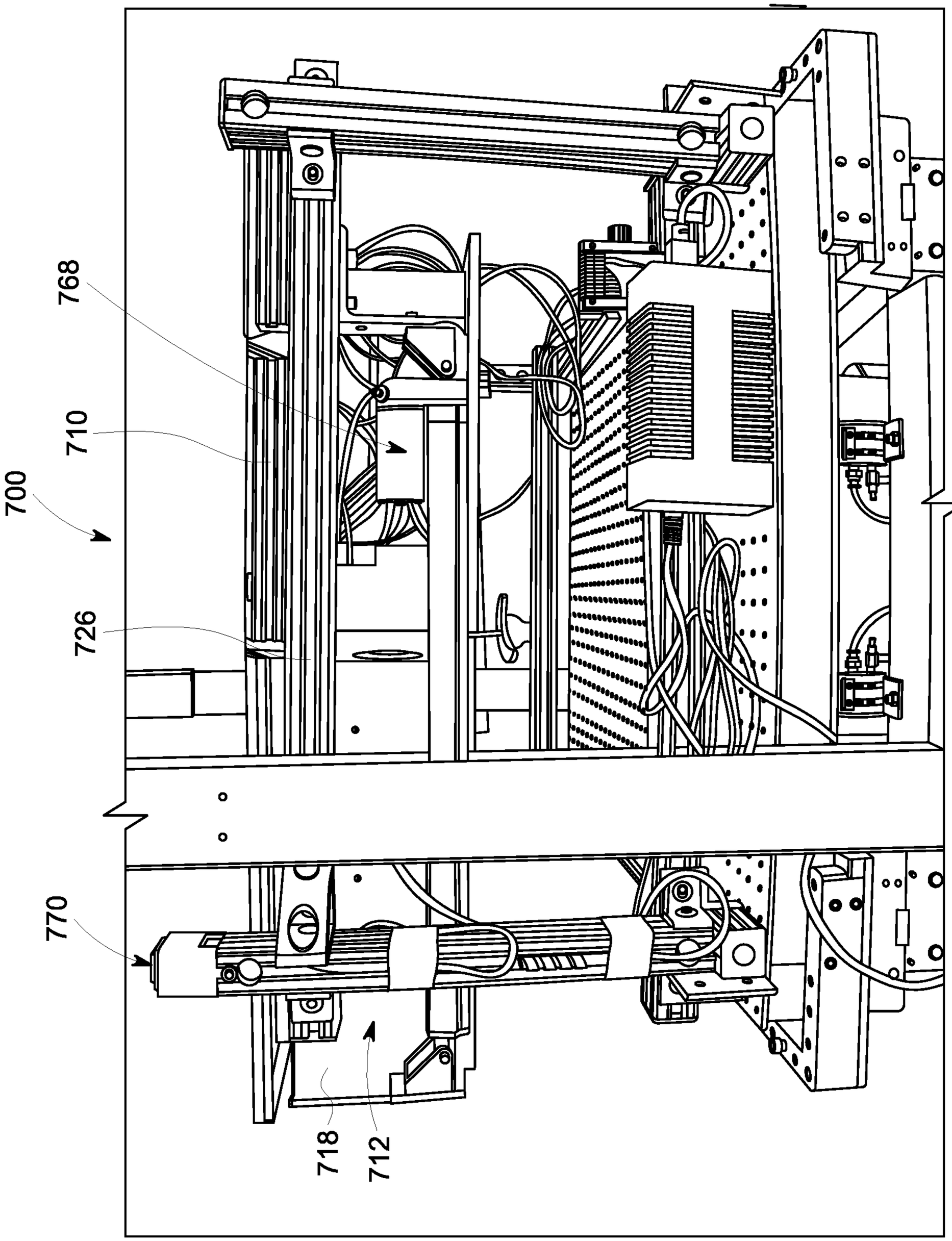

FIG. 29

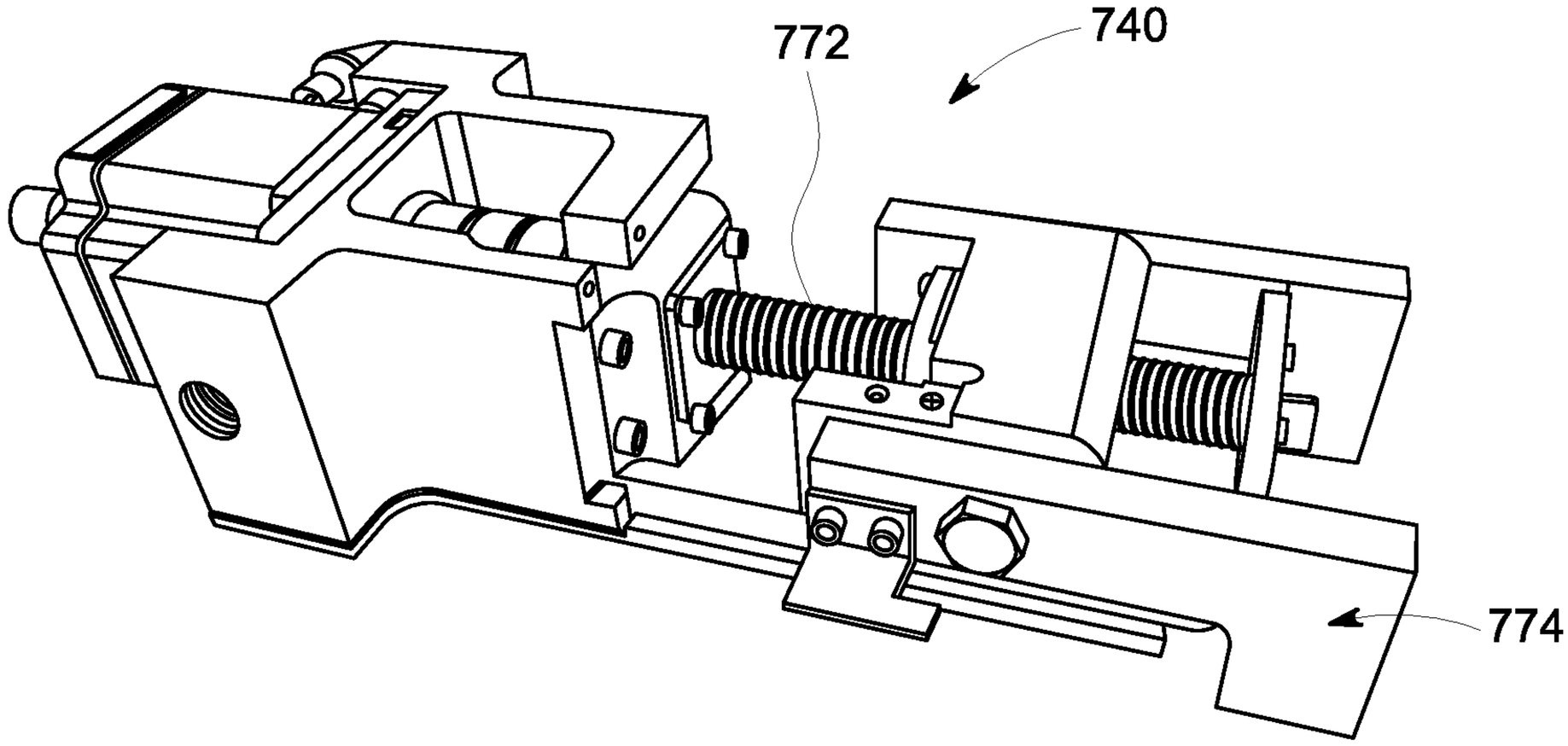

FIG. 30

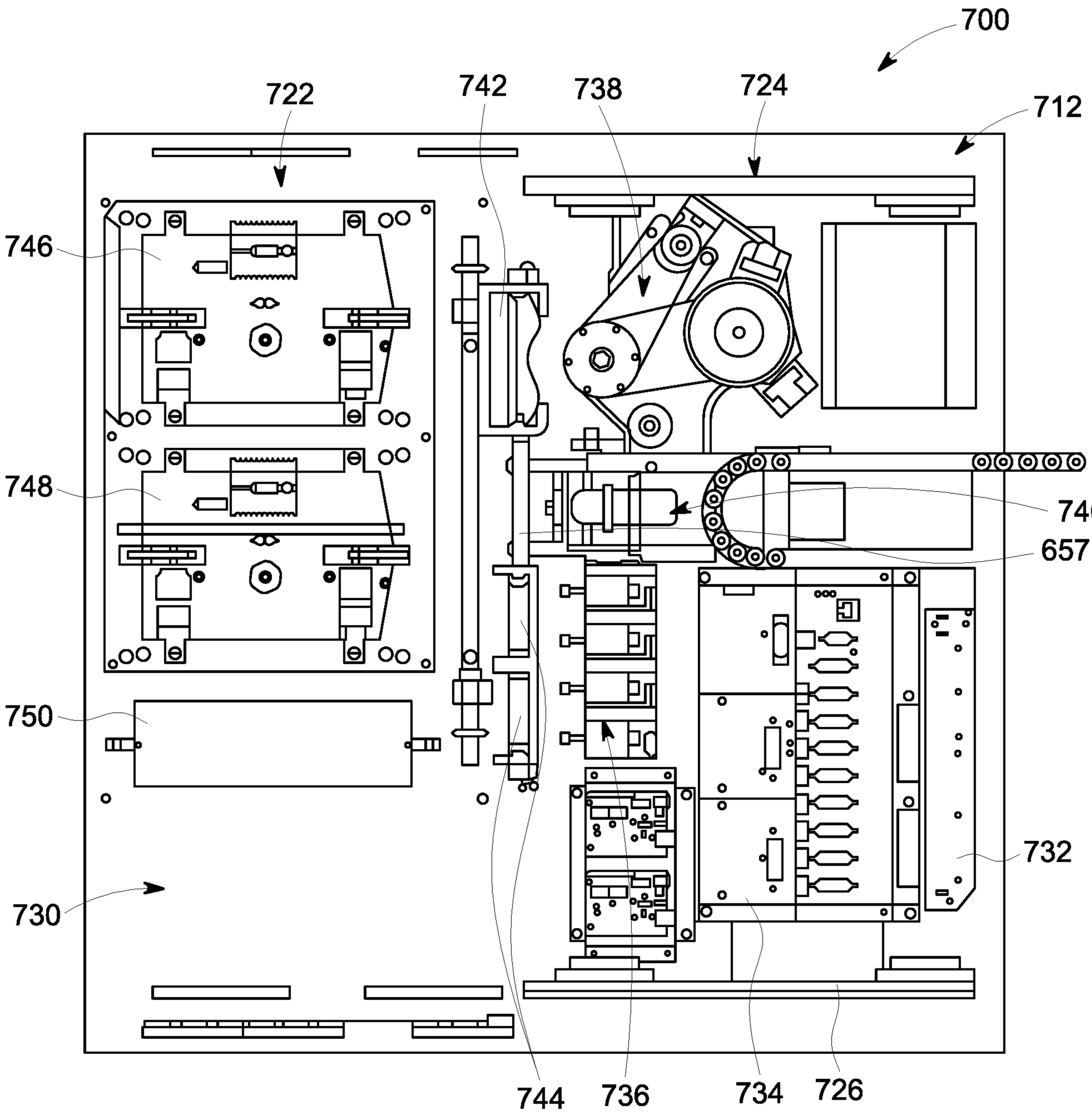
700
722
742
738
724
712
746
748
740
657
750
730
732
744
736
734
726

FIG. 31

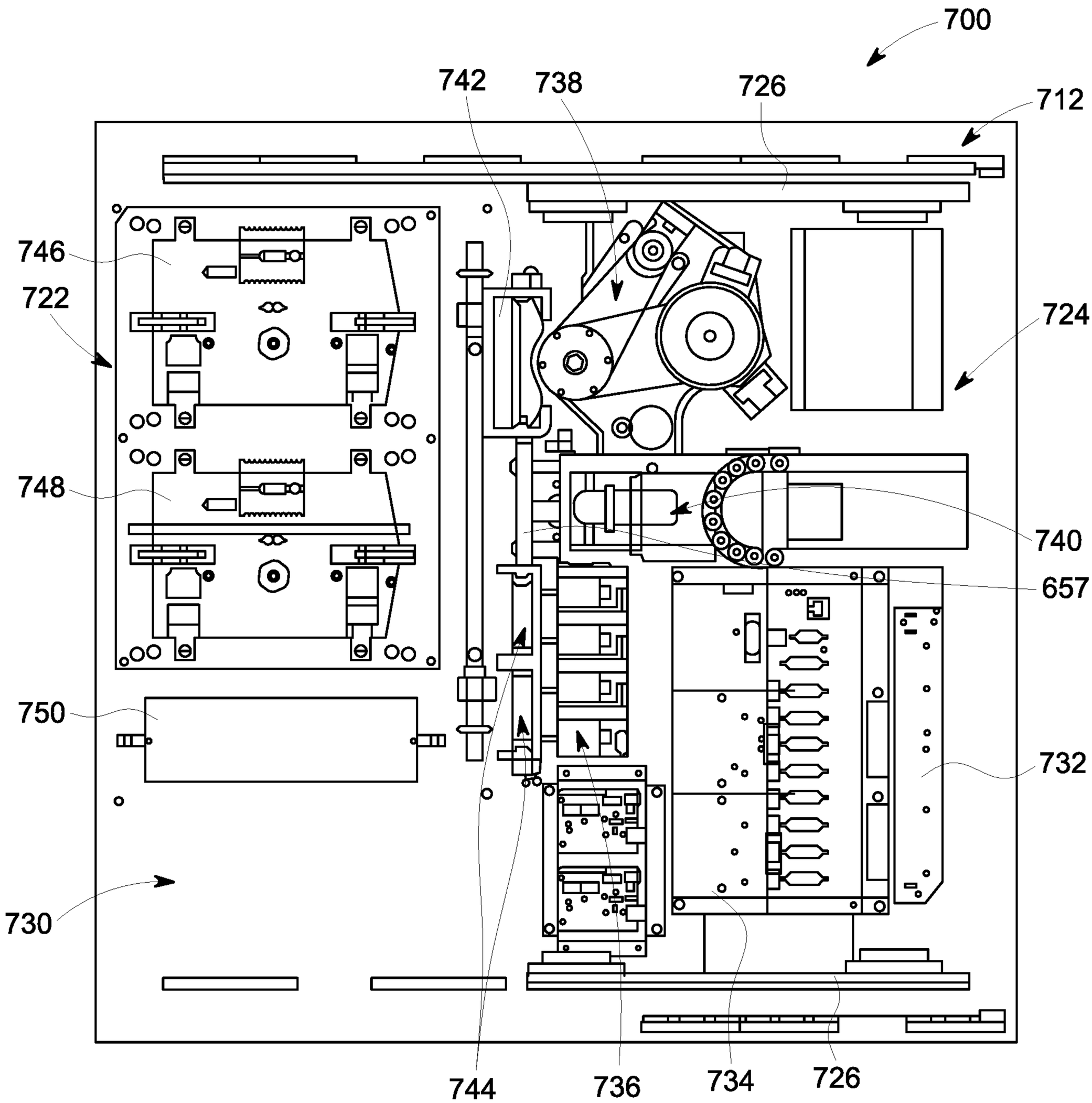
700
742
738
726
712
746
722
724
748
740
657
750
732
730
744
736
734
726

FIG. 32

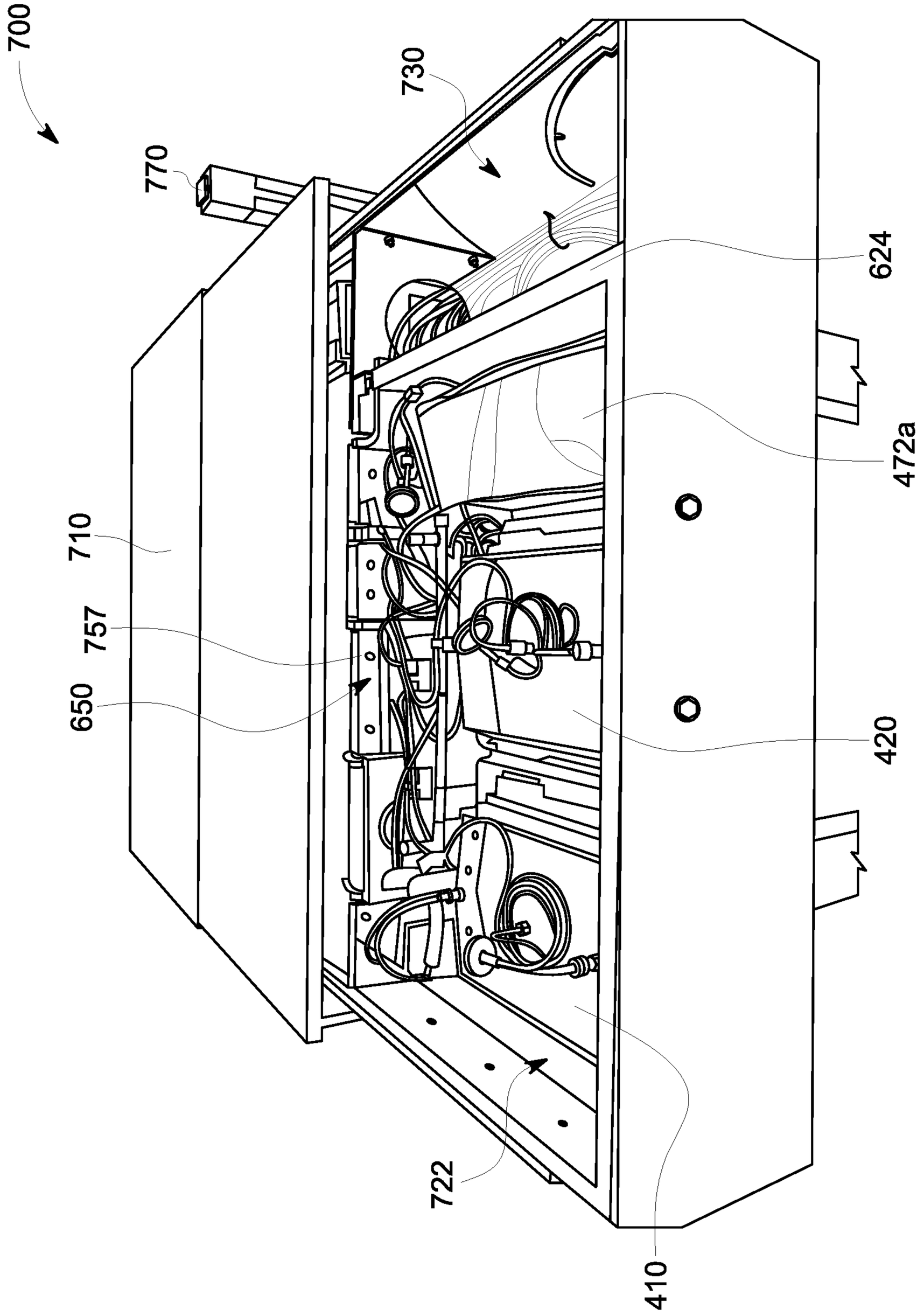

FIG. 33

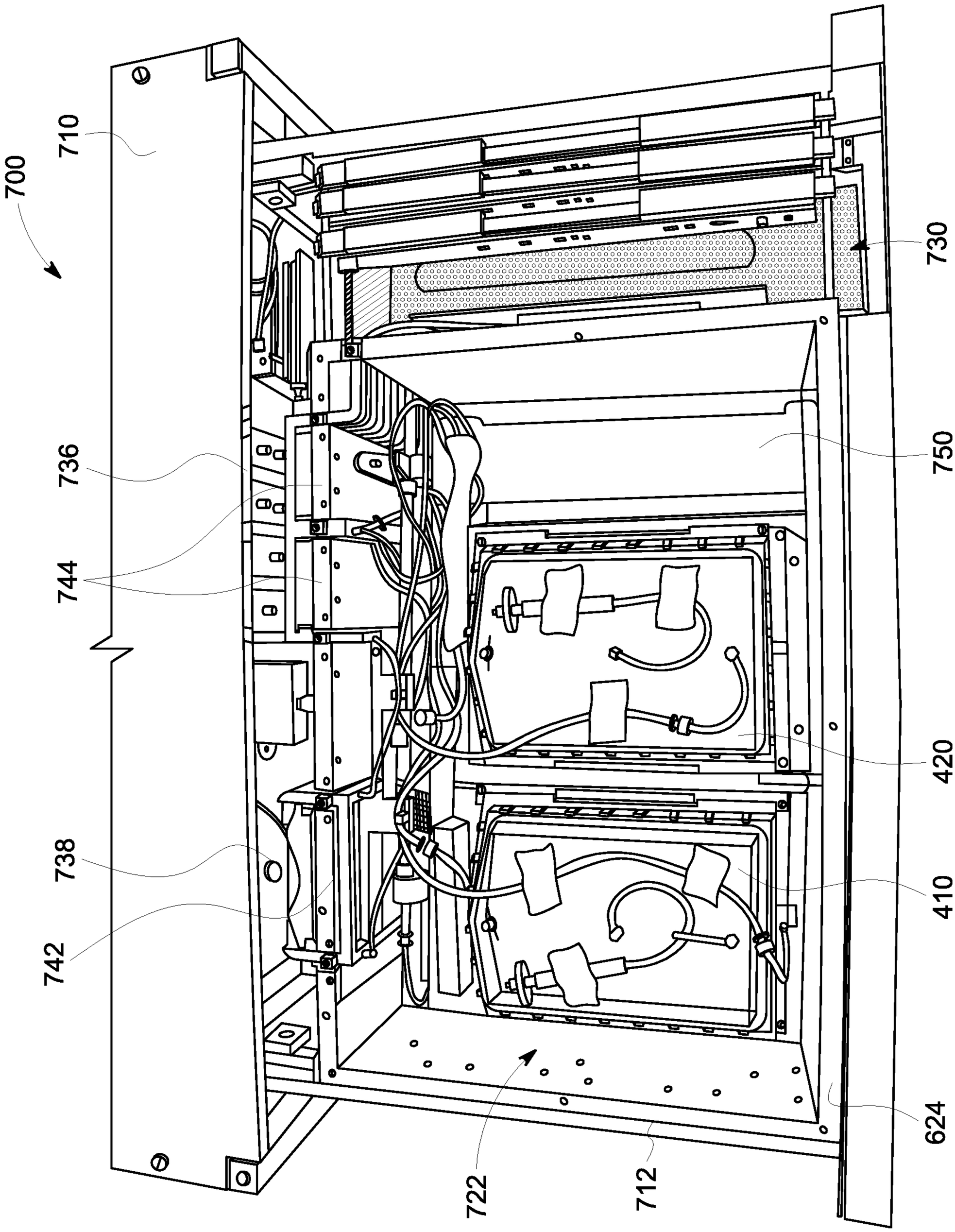

FIG. 34

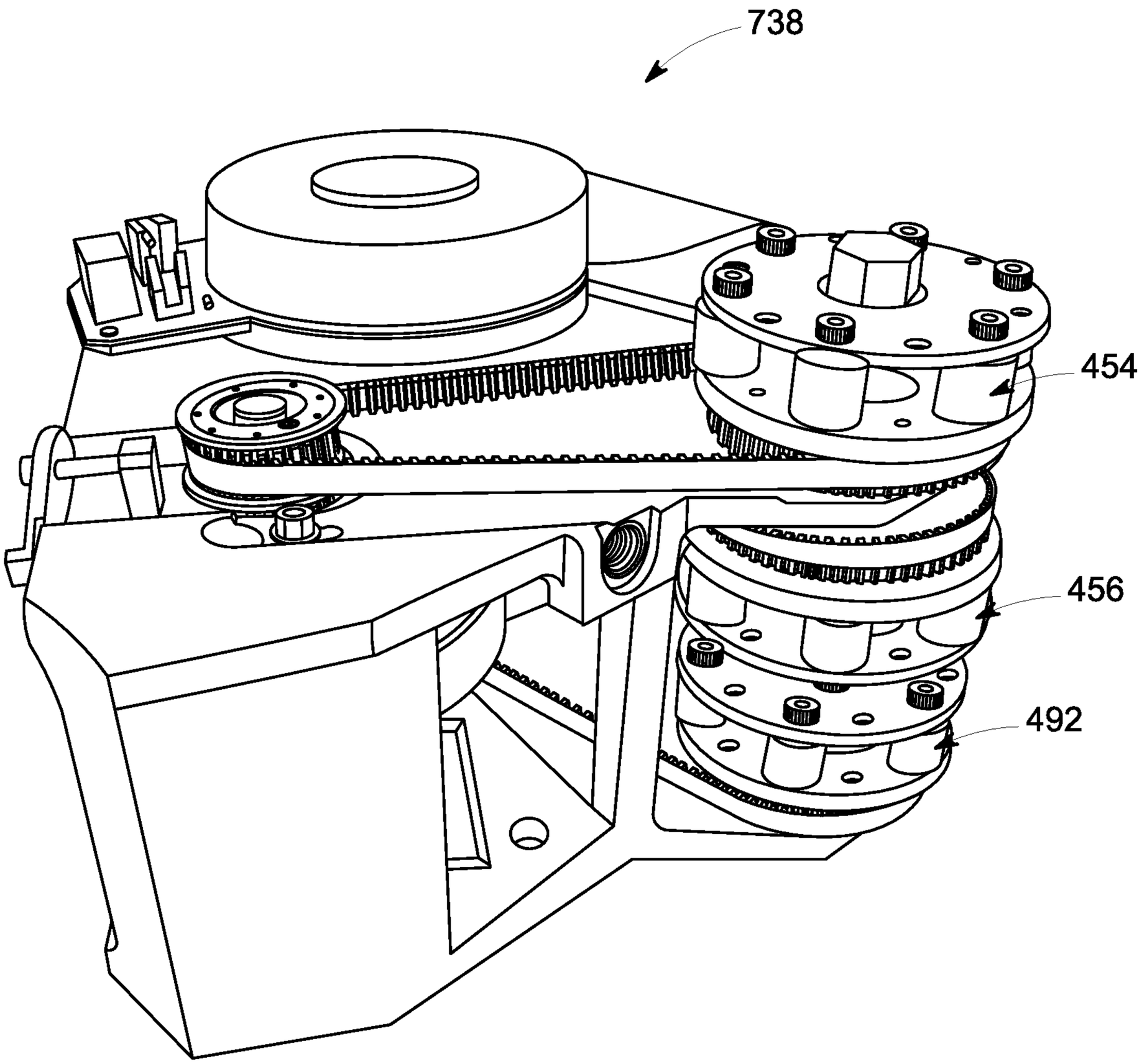

FIG. 35

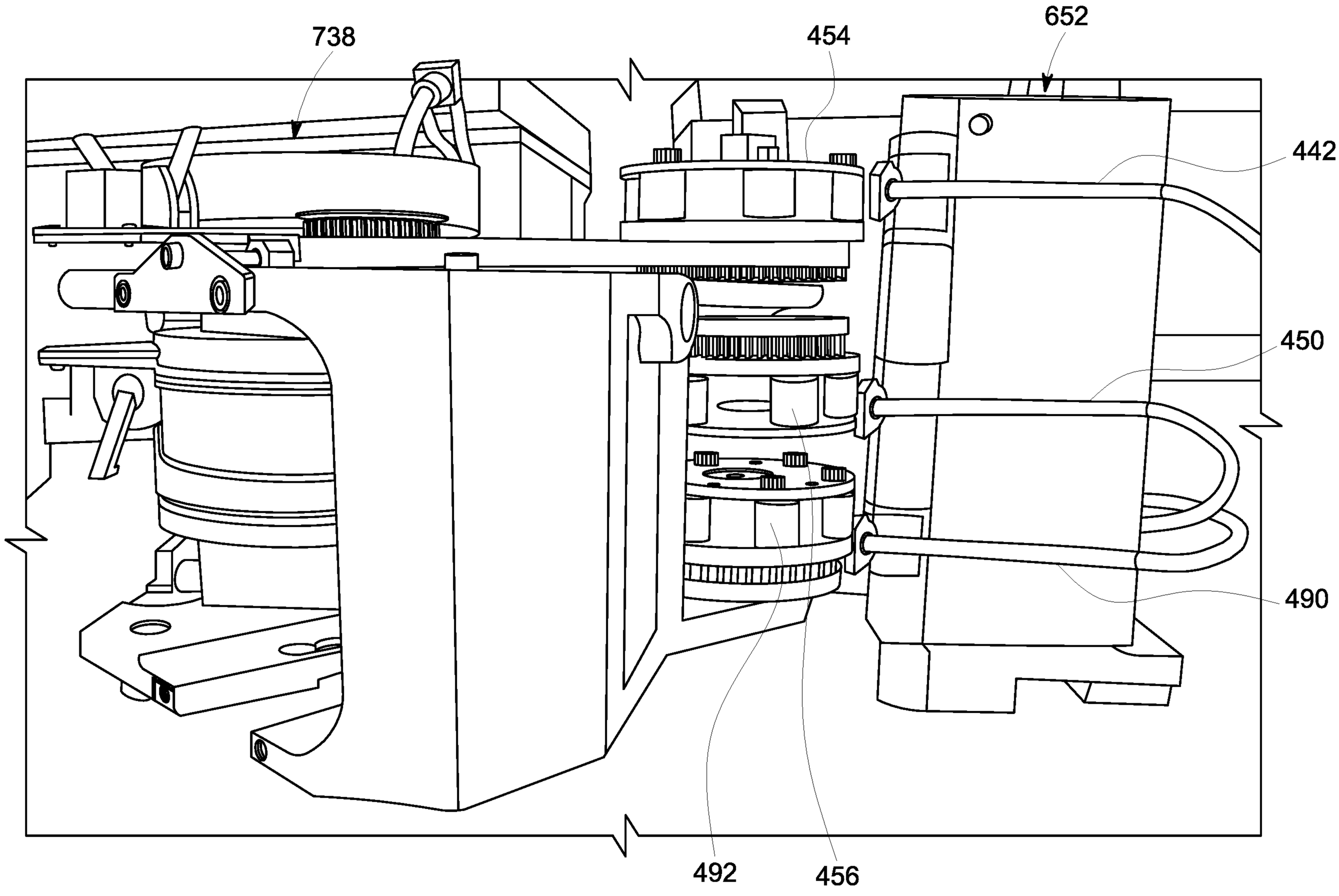

FIG. 36

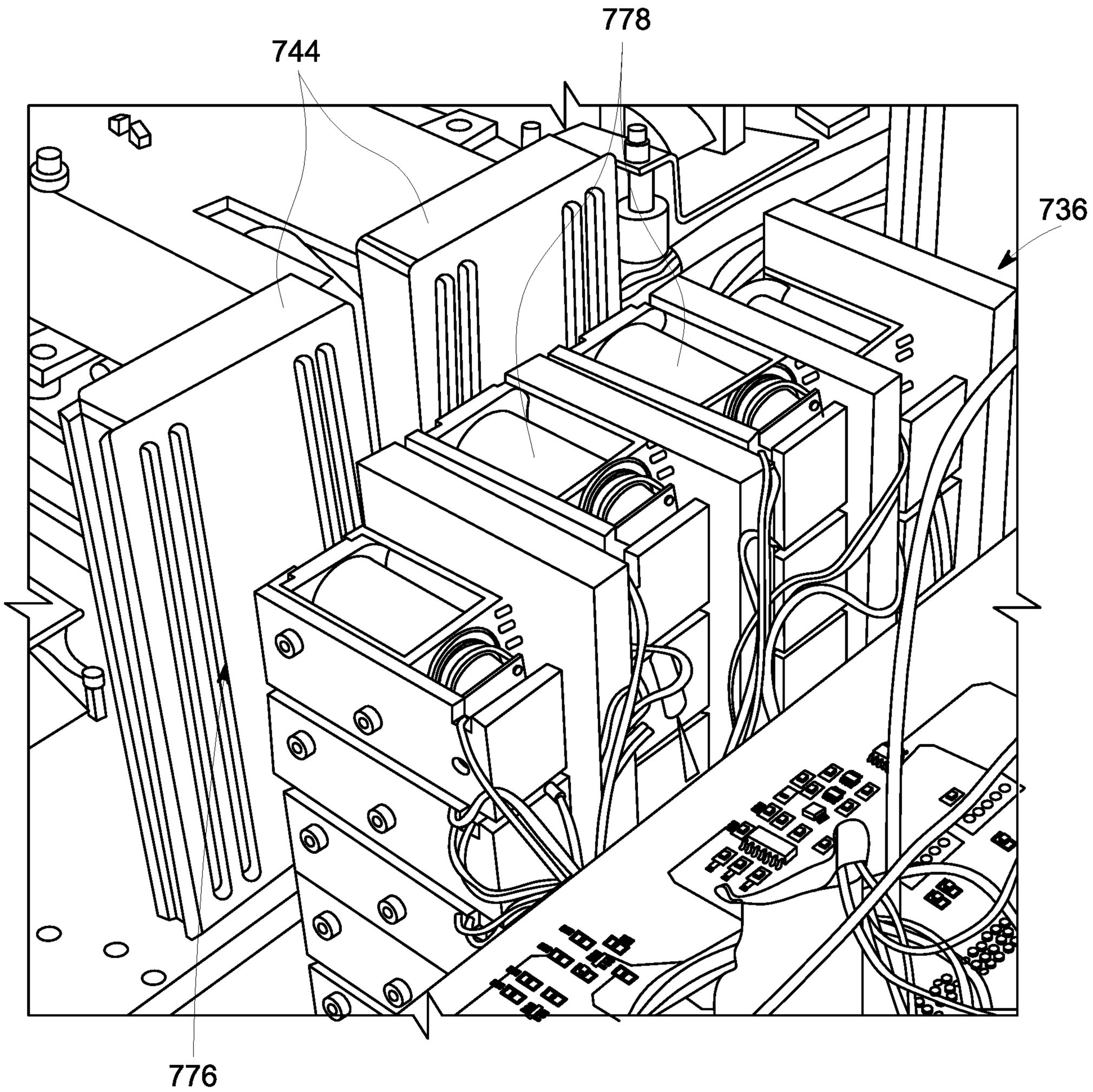

FIG. 37

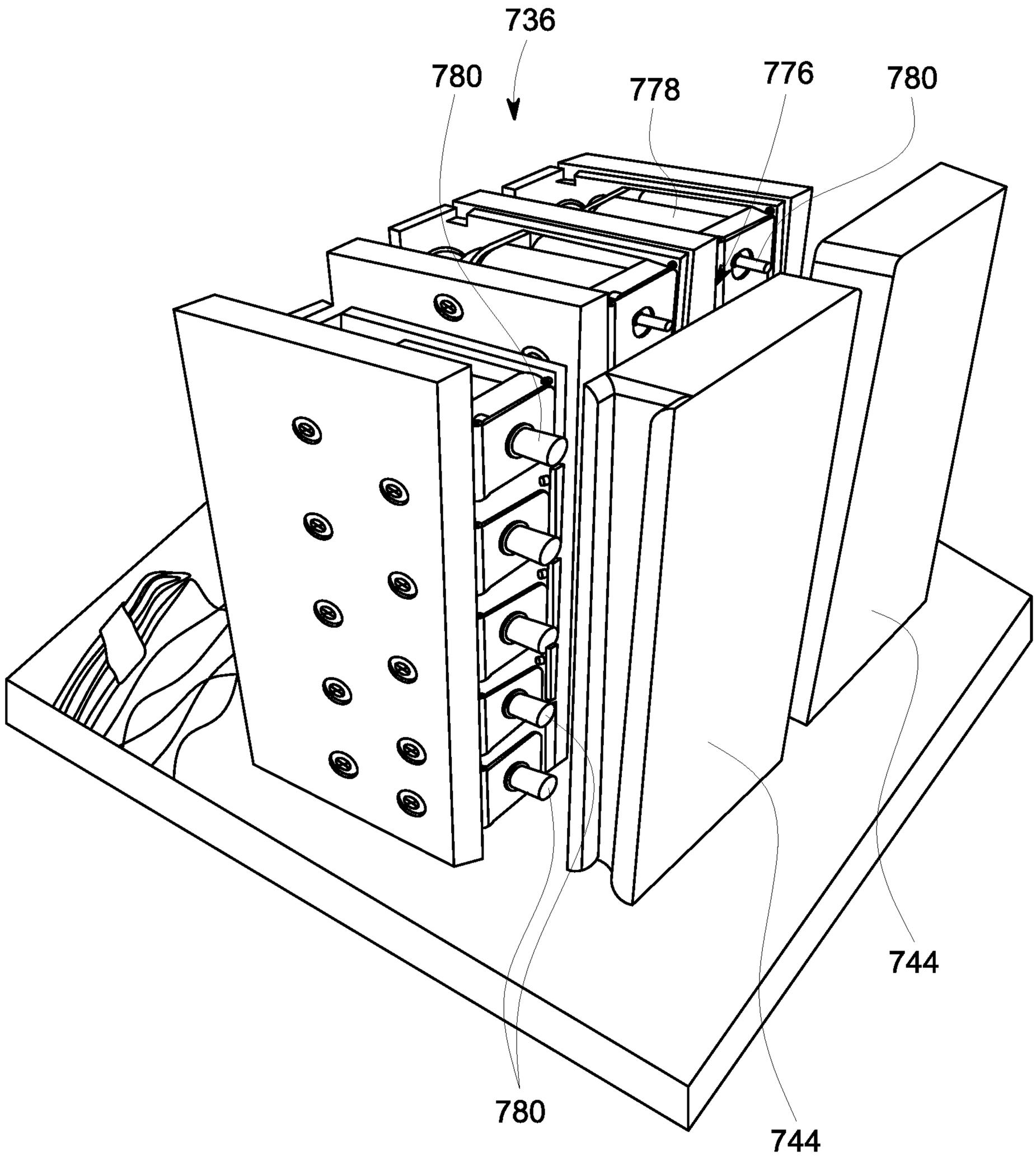

FIG. 38

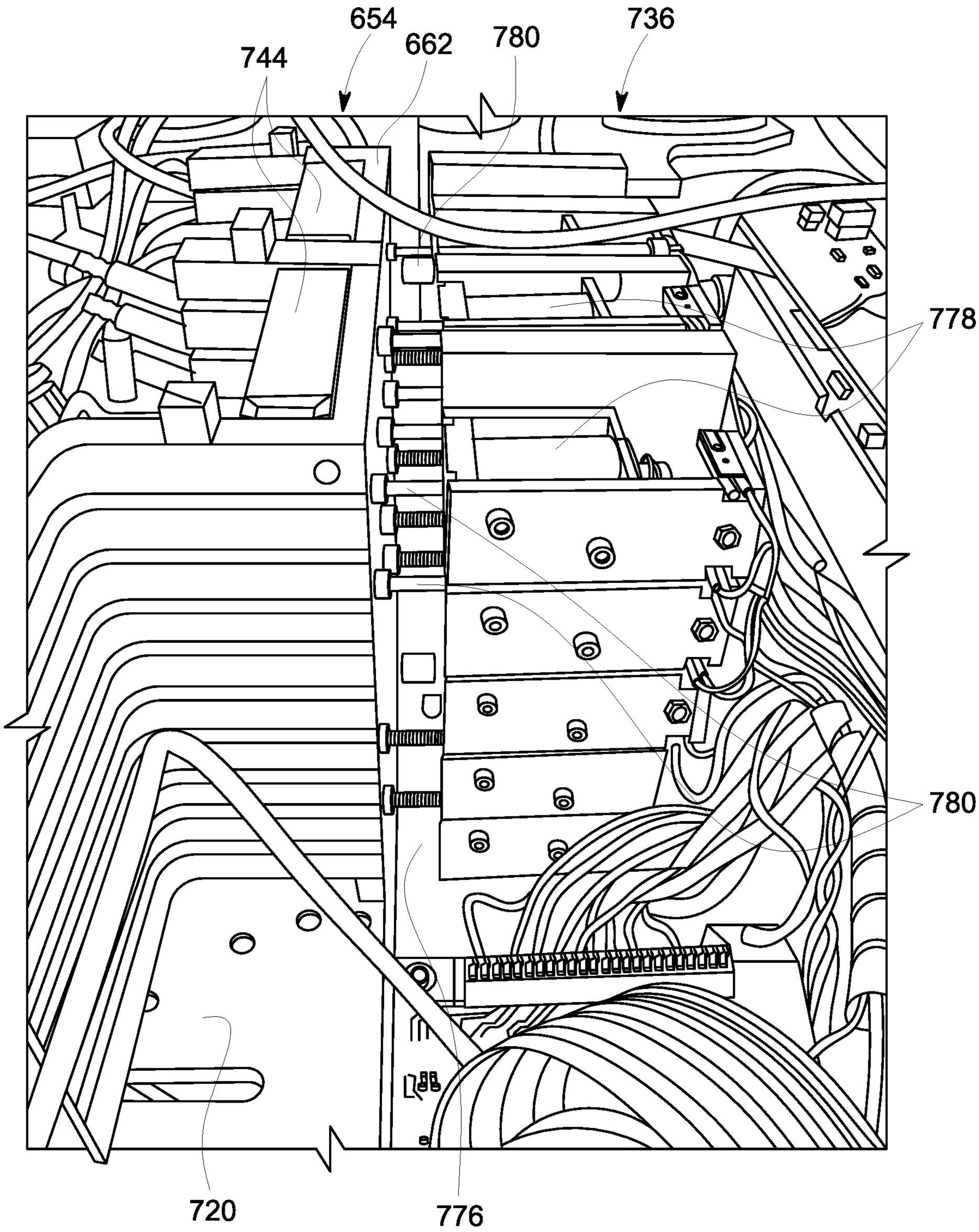

FIG. 39

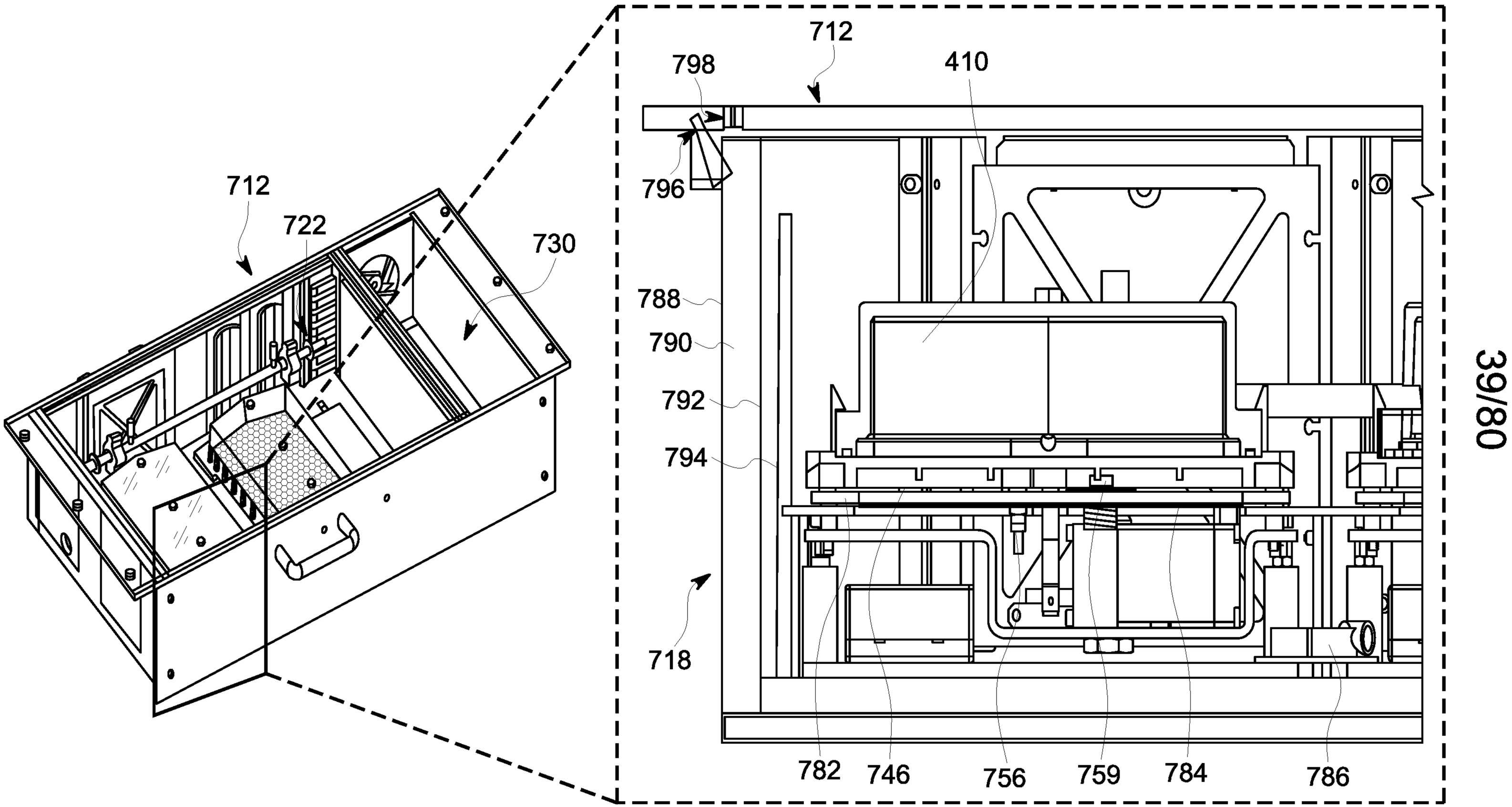
712
722
730
712
798
410
796
788
790
792
794
718
782
746
756
759
784
786

FIG. 40

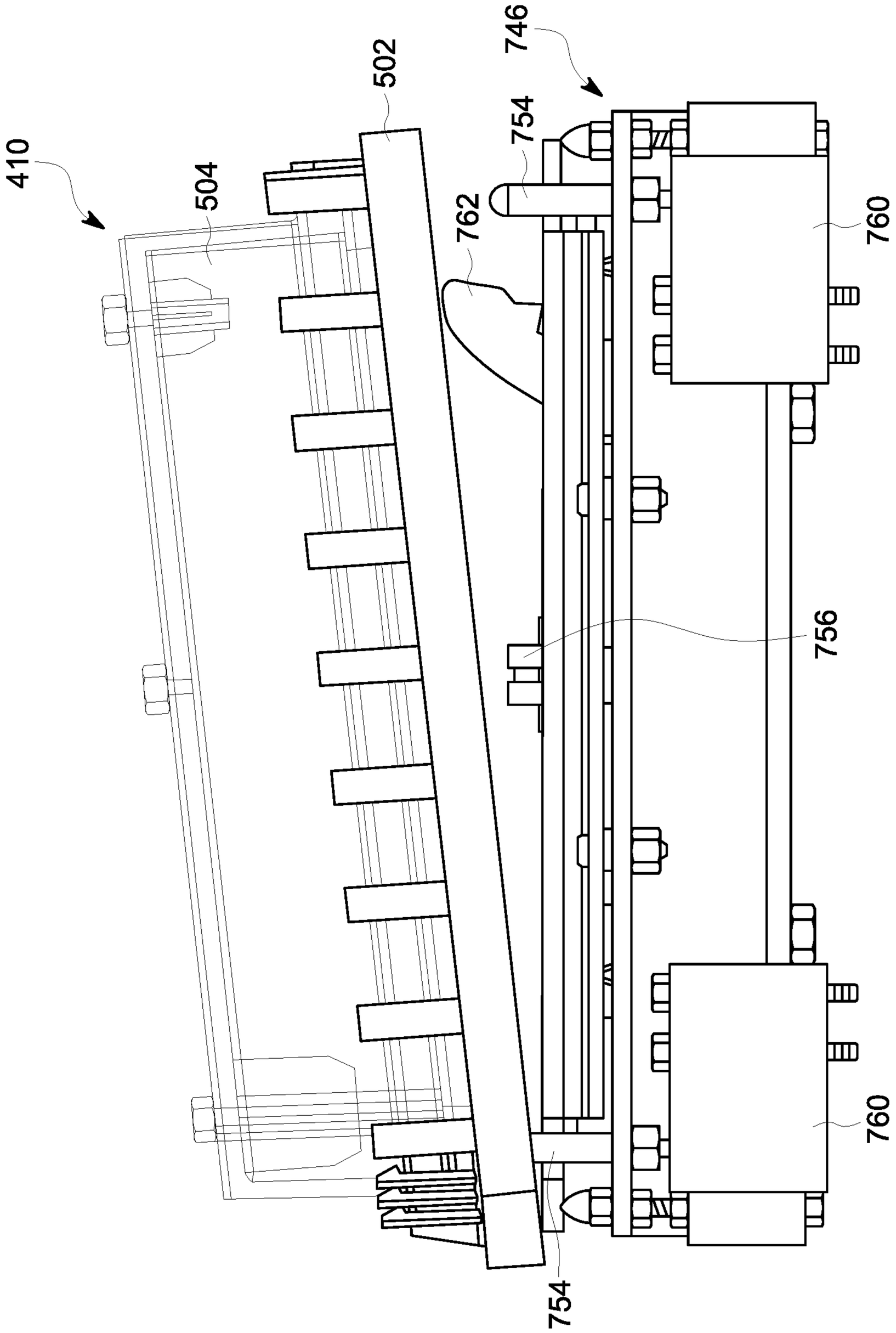

FIG. 41

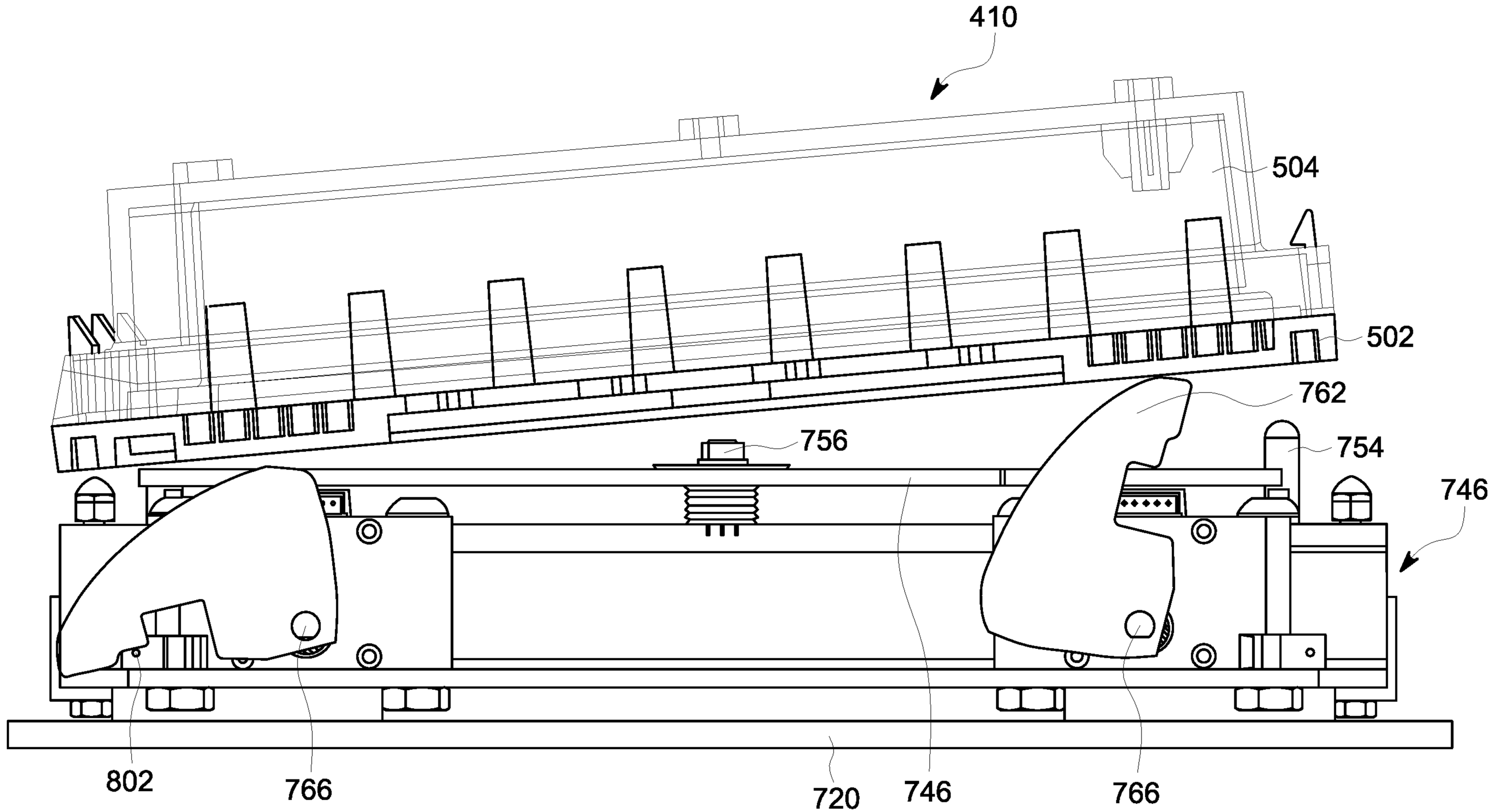

FIG. 42

42/80

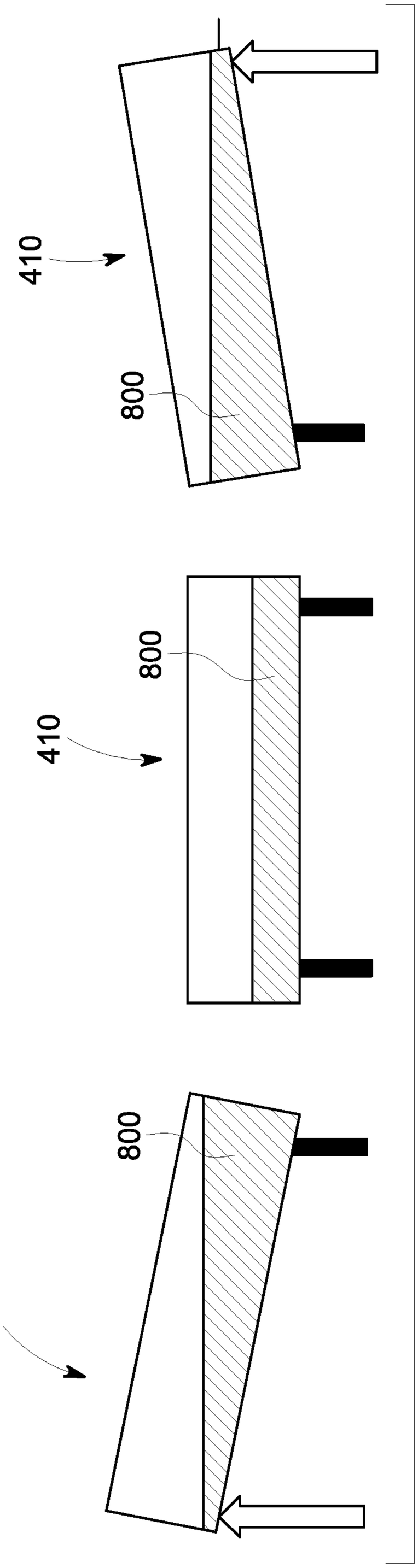

FIG. 43

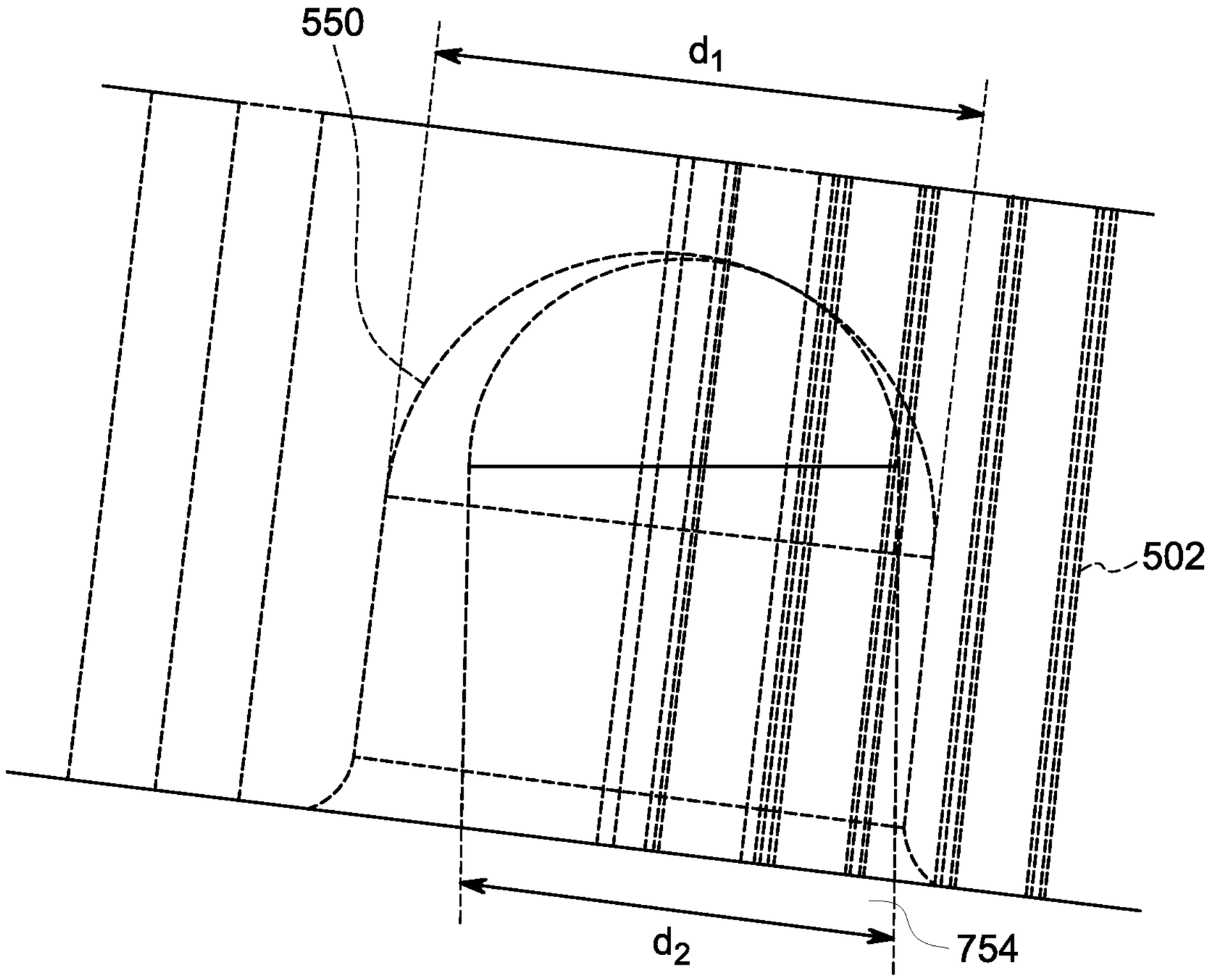

FIG. 44

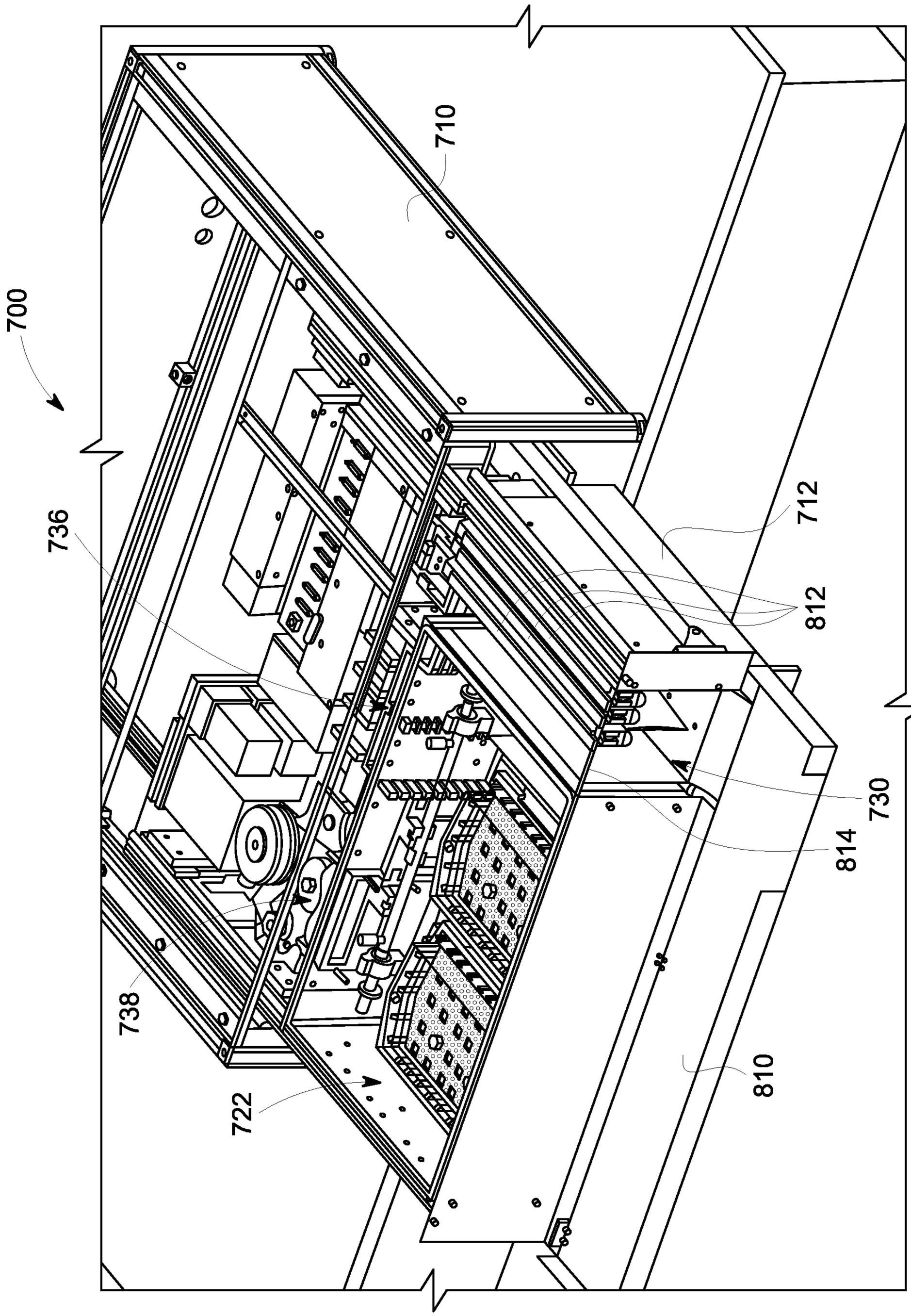

FIG. 45

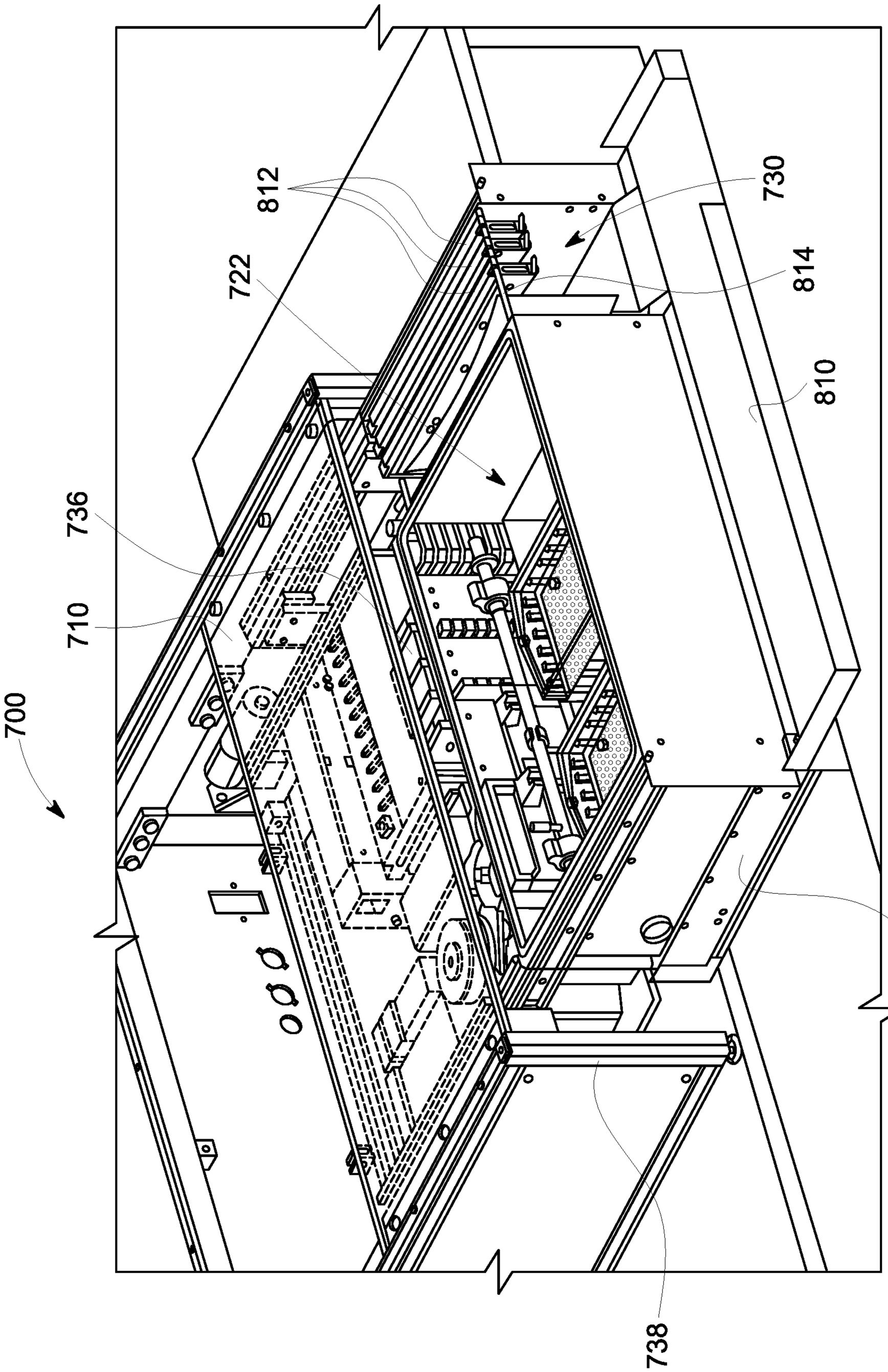

FIG. 46

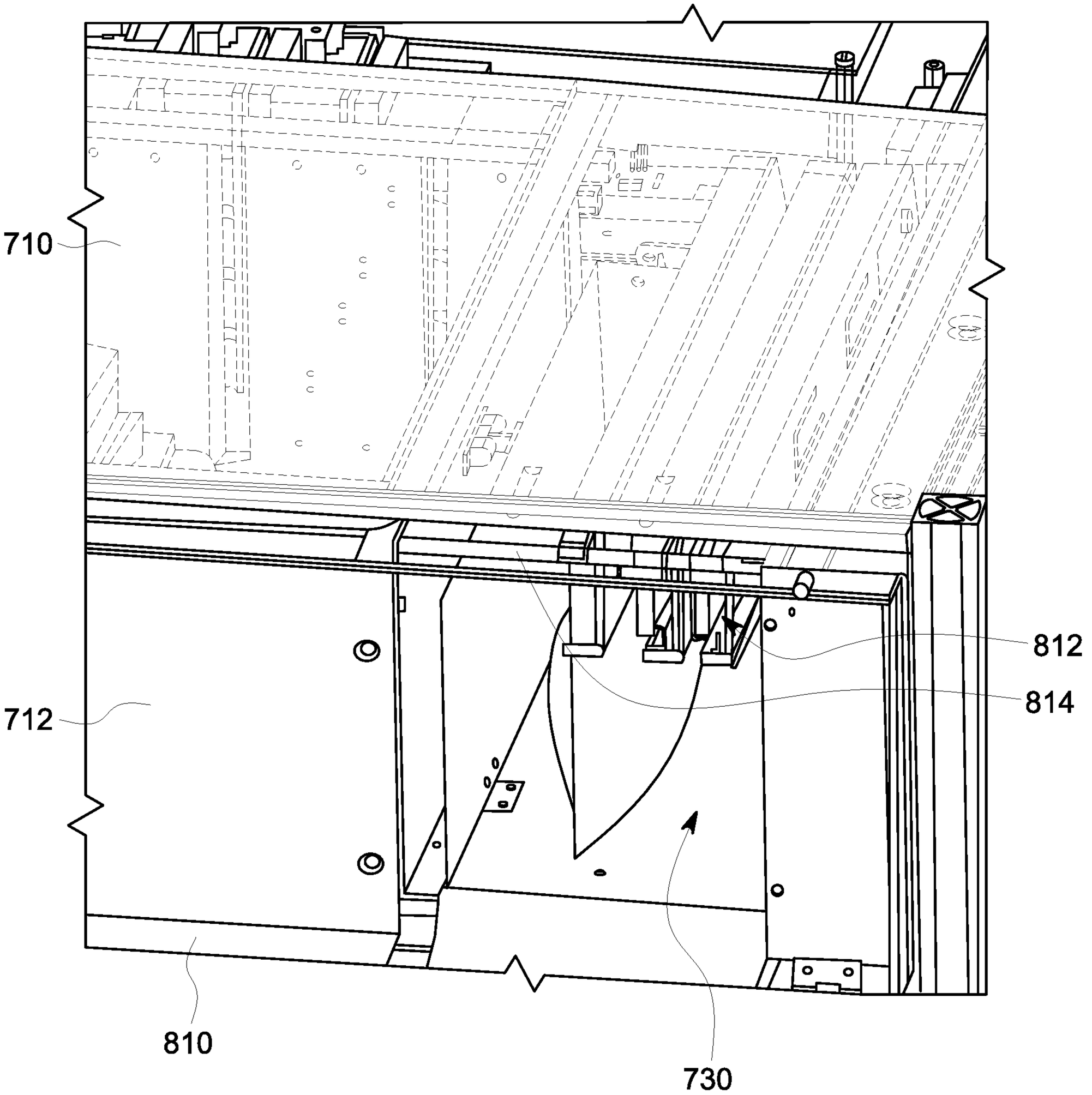

FIG. 47

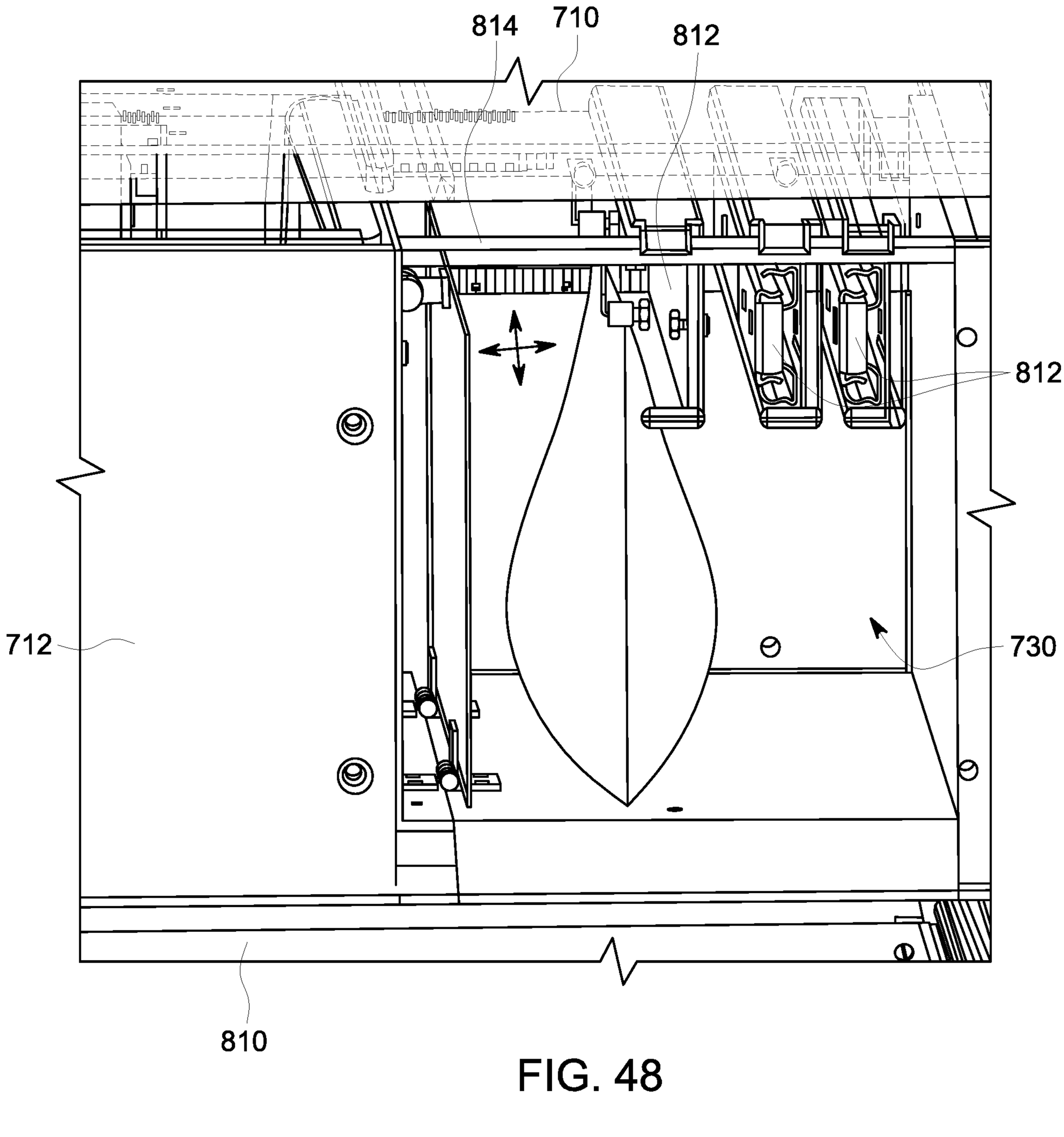

FIG. 48

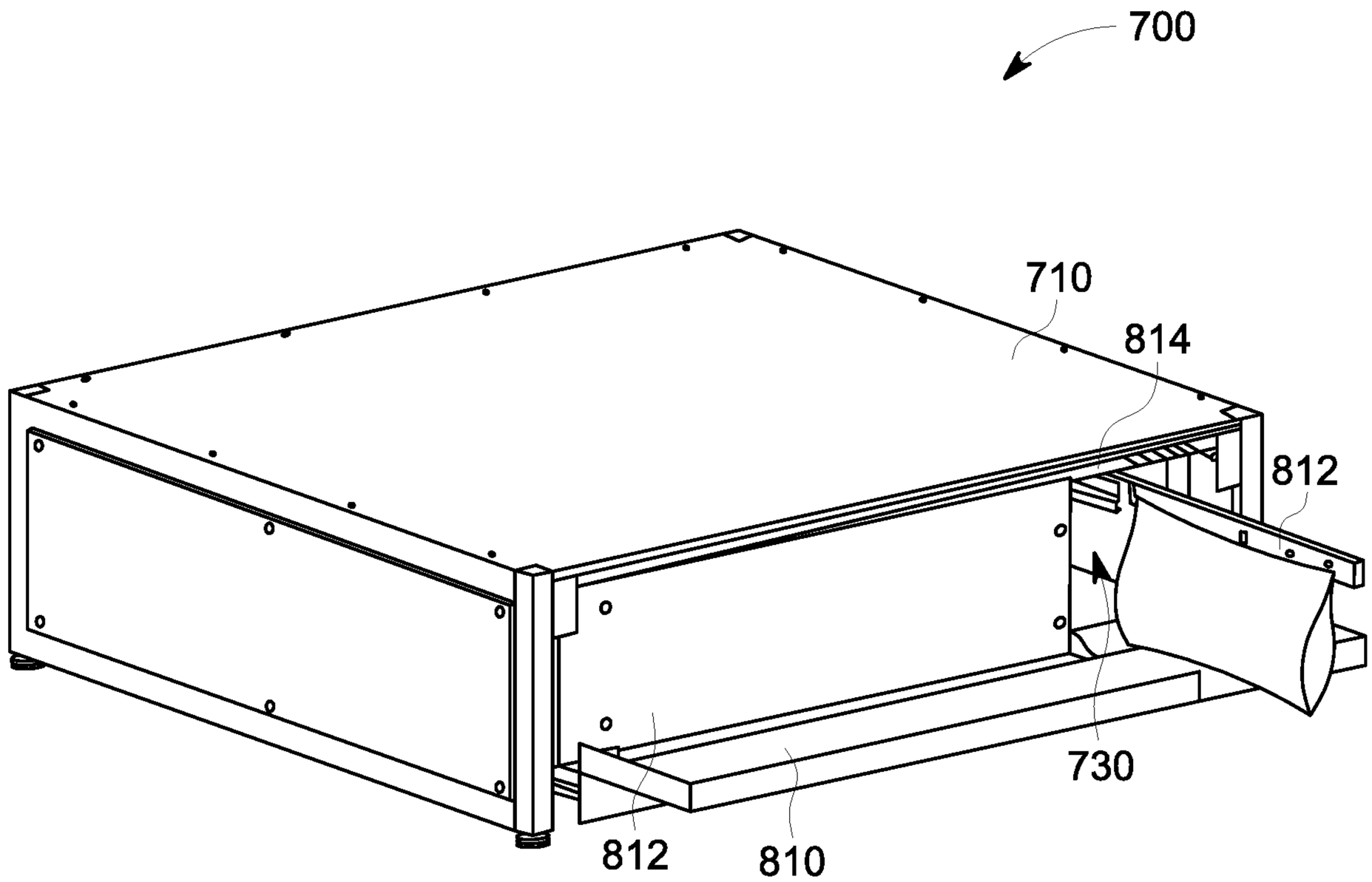

FIG. 49

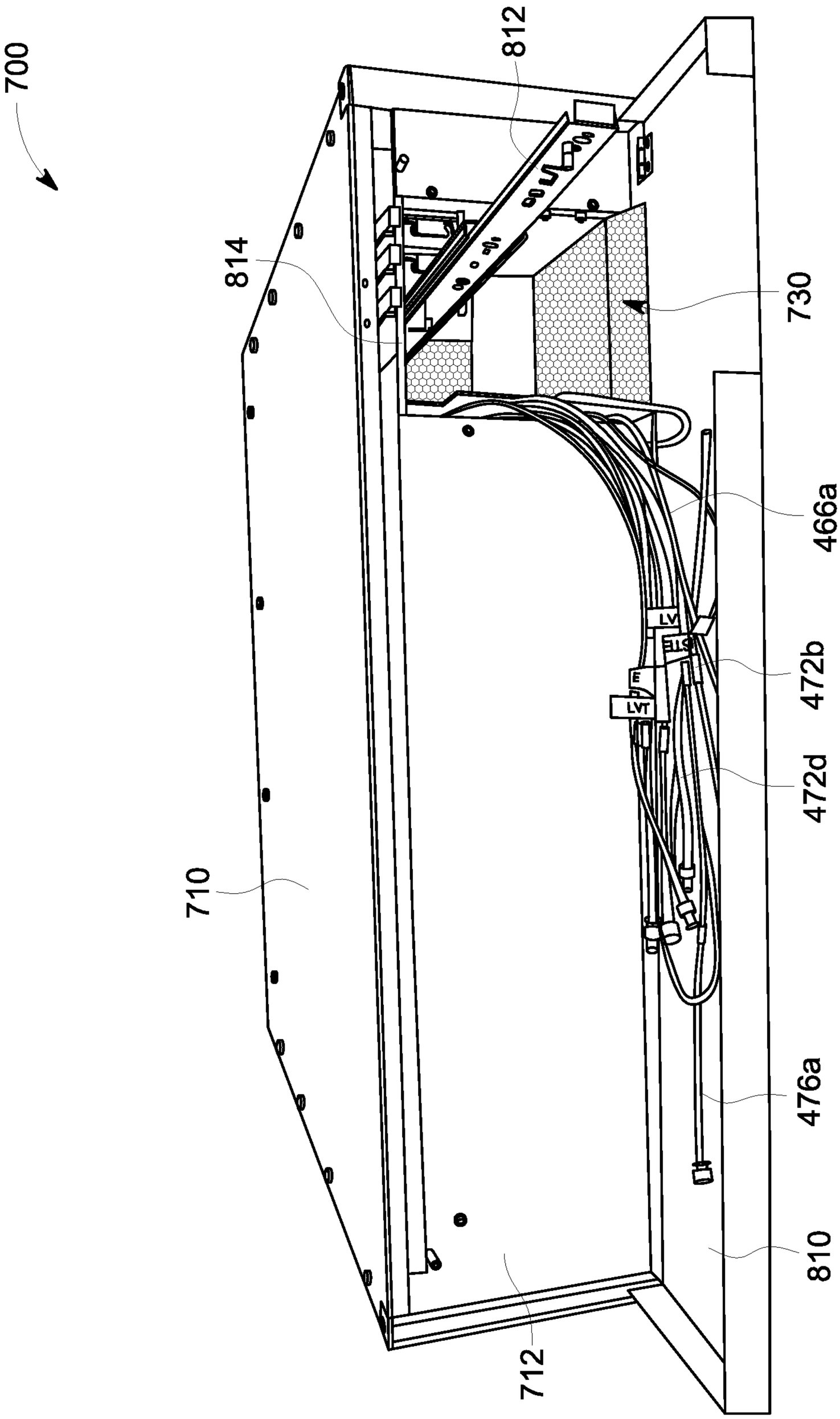

FIG. 50

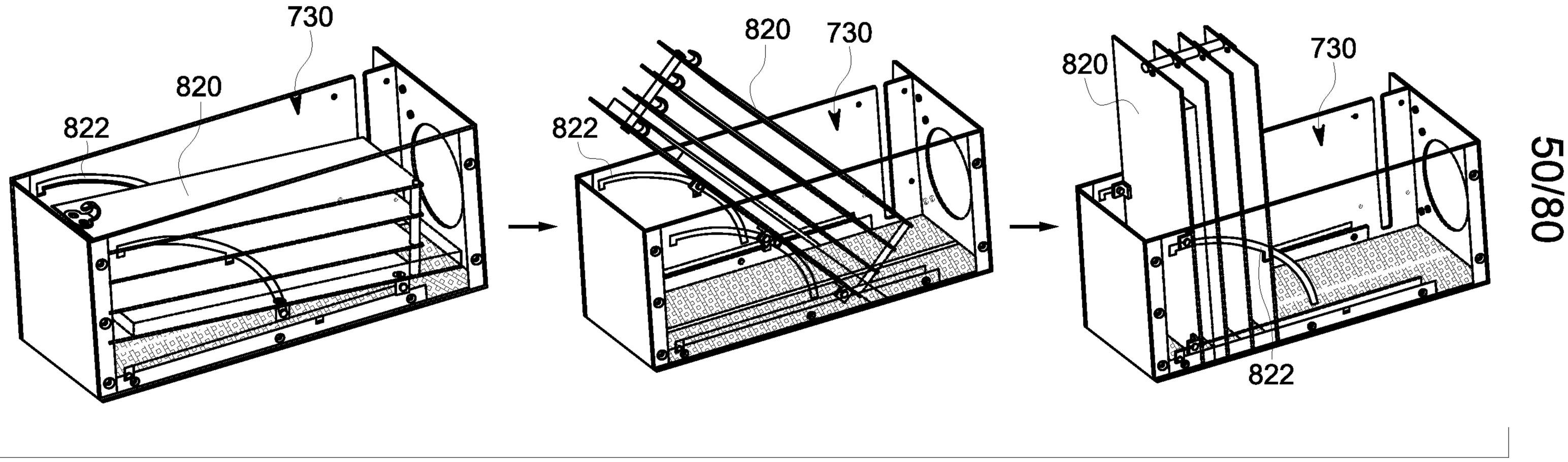

FIG. 51

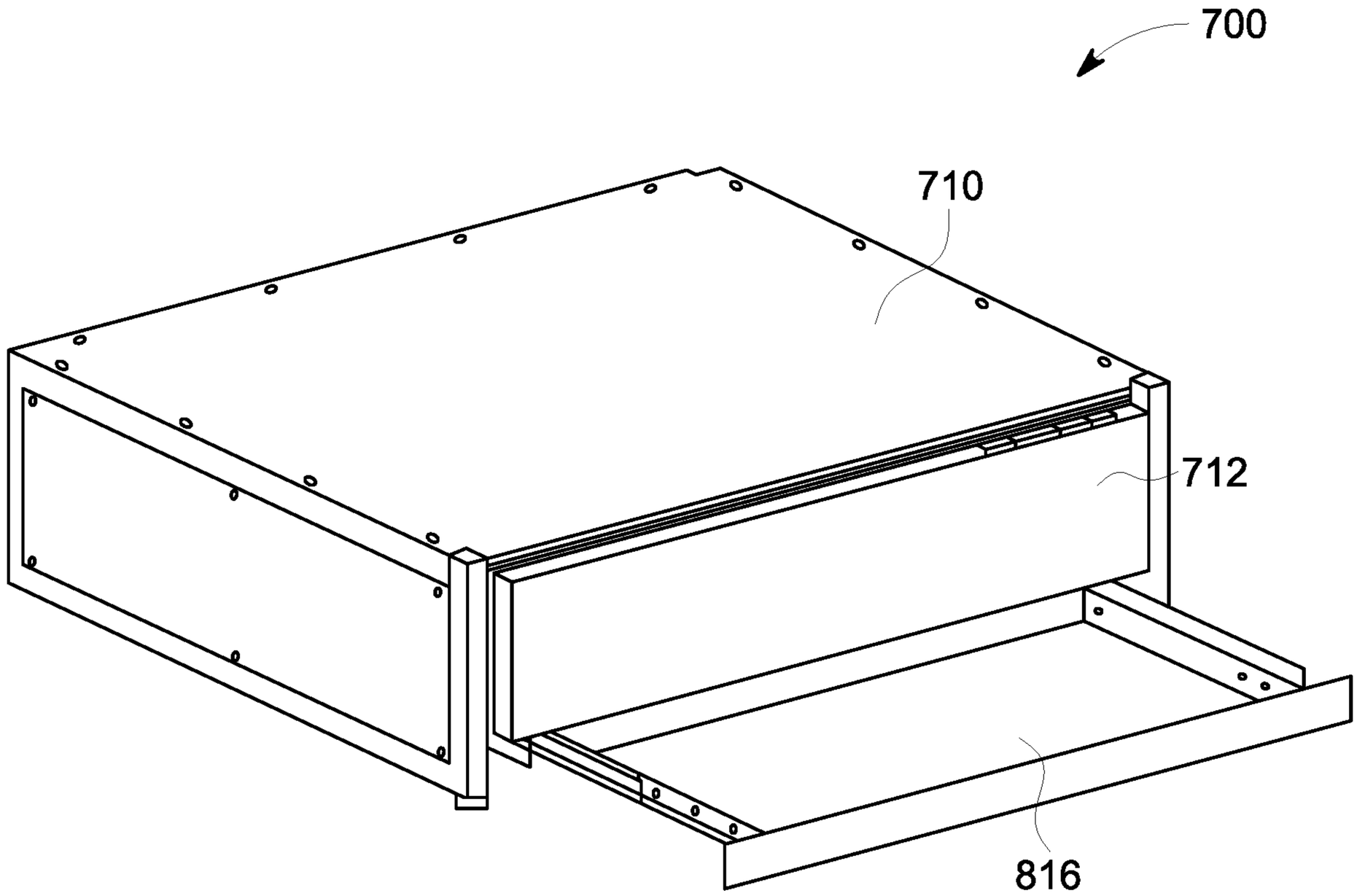

FIG. 52

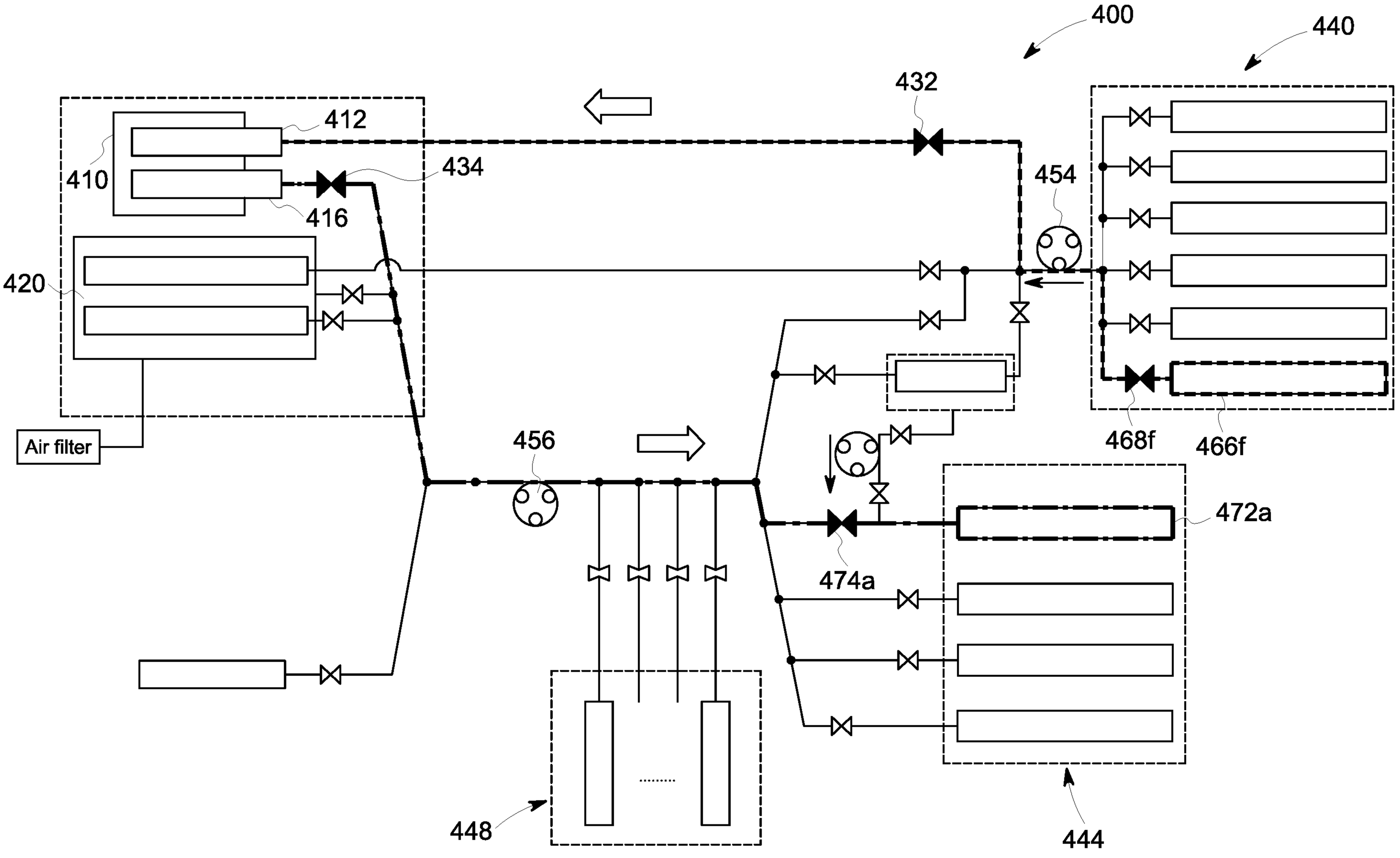
400
440
432
412
410
434
416
454
420
Air filter
456
468f
466f
472a
474a
448
444

FIG. 53

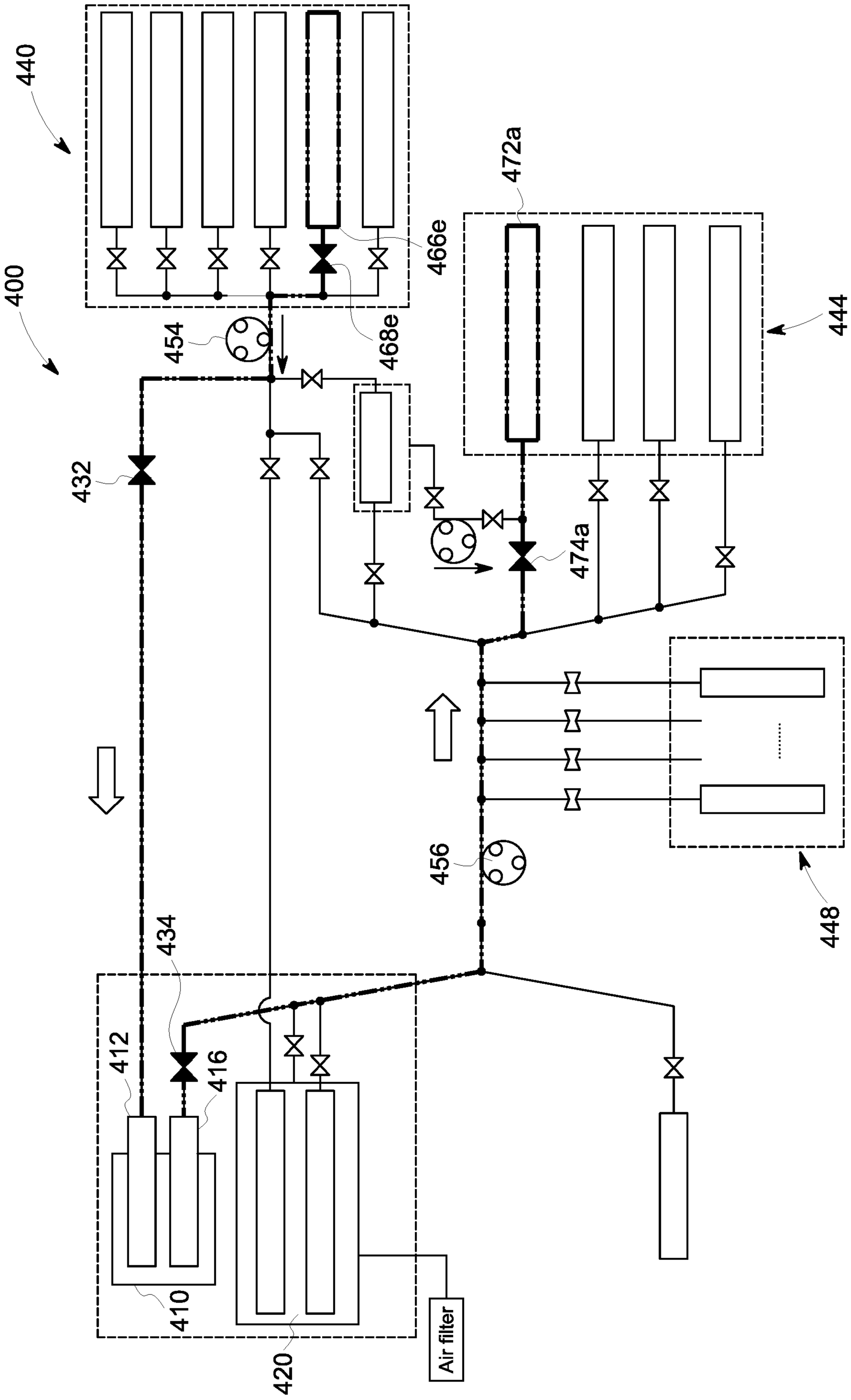
400
440
444
448
432
434
454
456
466e
468e
472a
474a
410
412
416
420
Air filter

FIG. 54

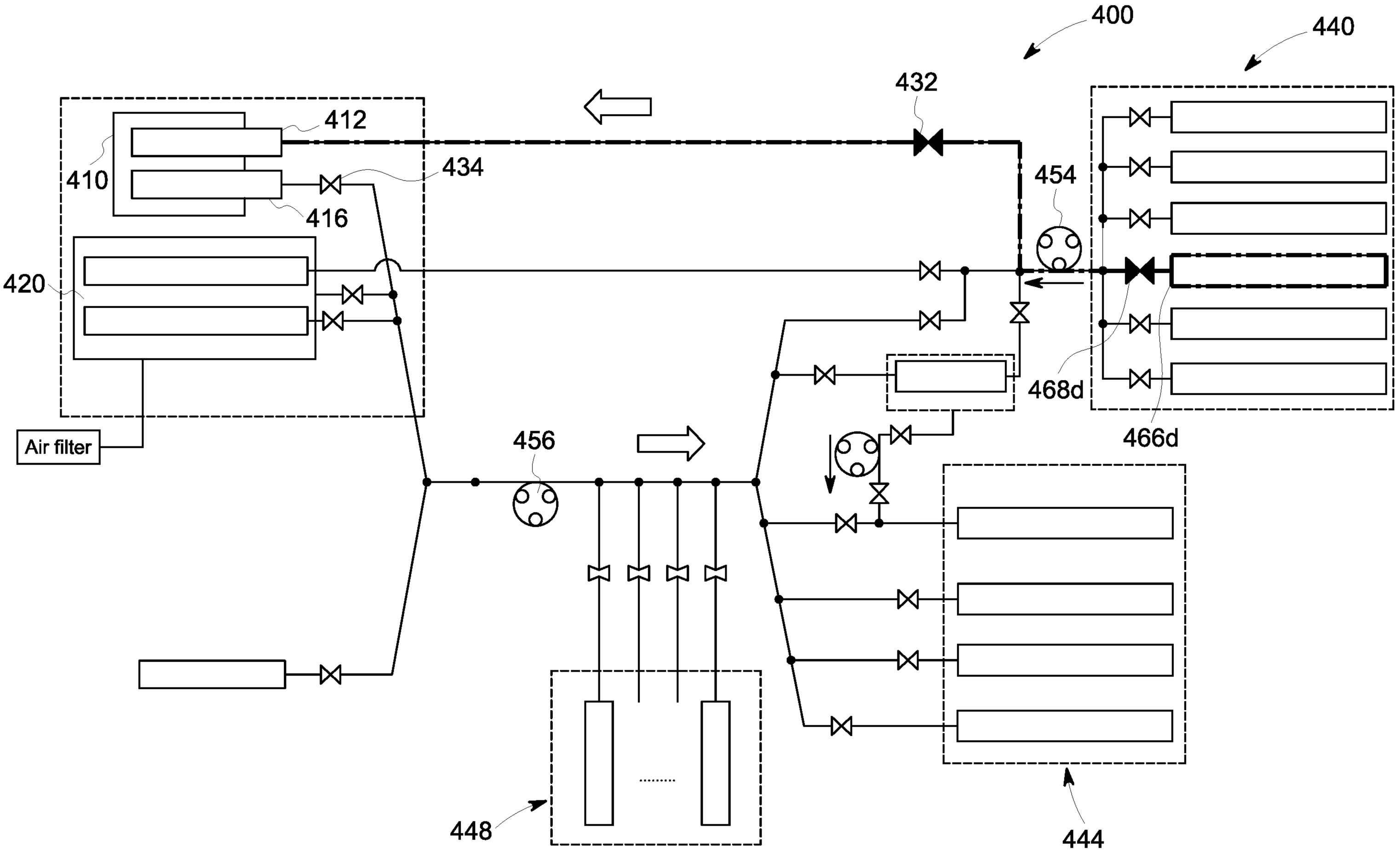
400
440
432
412
410
434
416
454
420
Air filter
456
468d
466d
448
444

FIG. 55

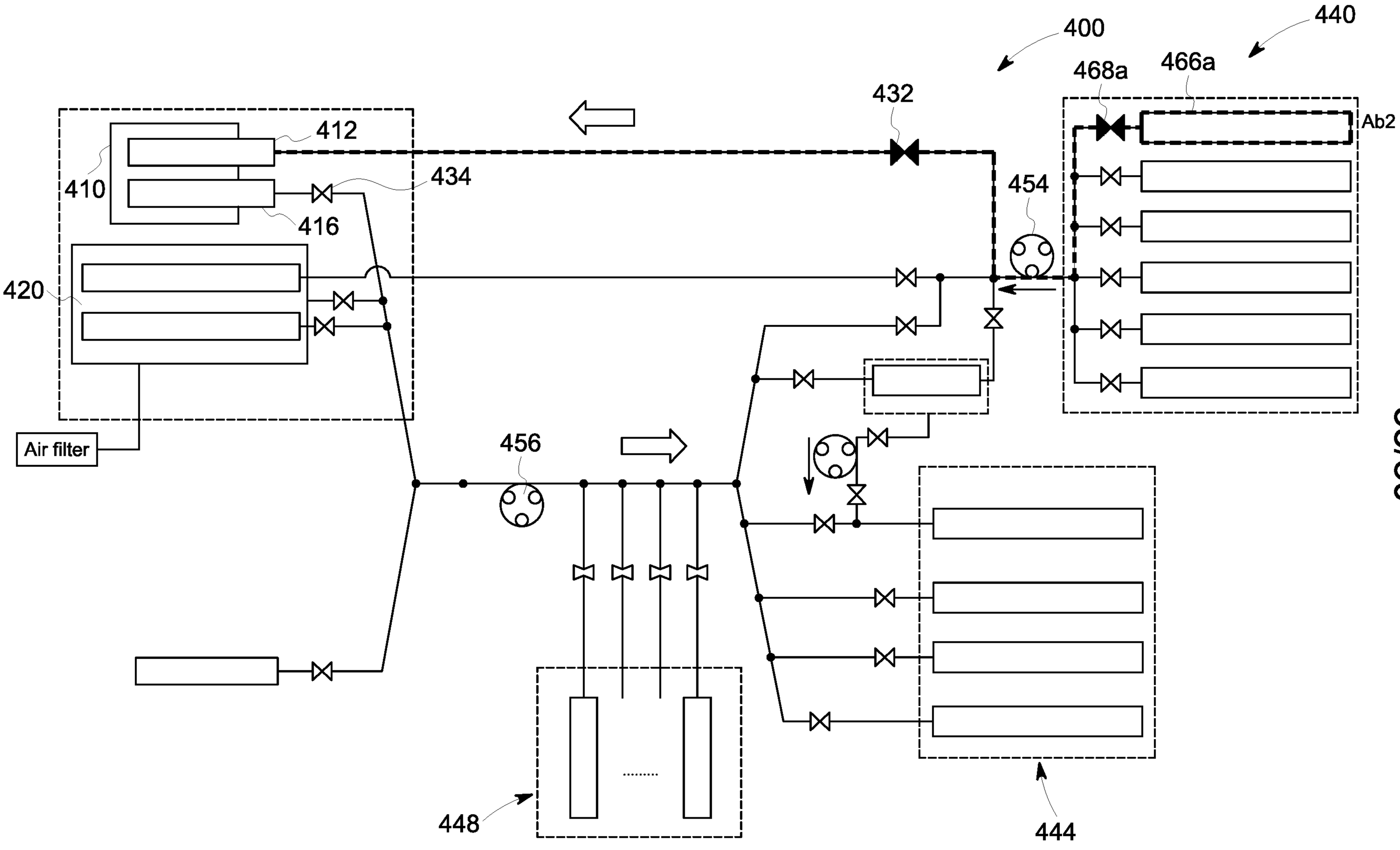
400
440
468a
466a
Ab2
432
412
410
434
416
454
420
Air filter
456
448
444

FIG. 56

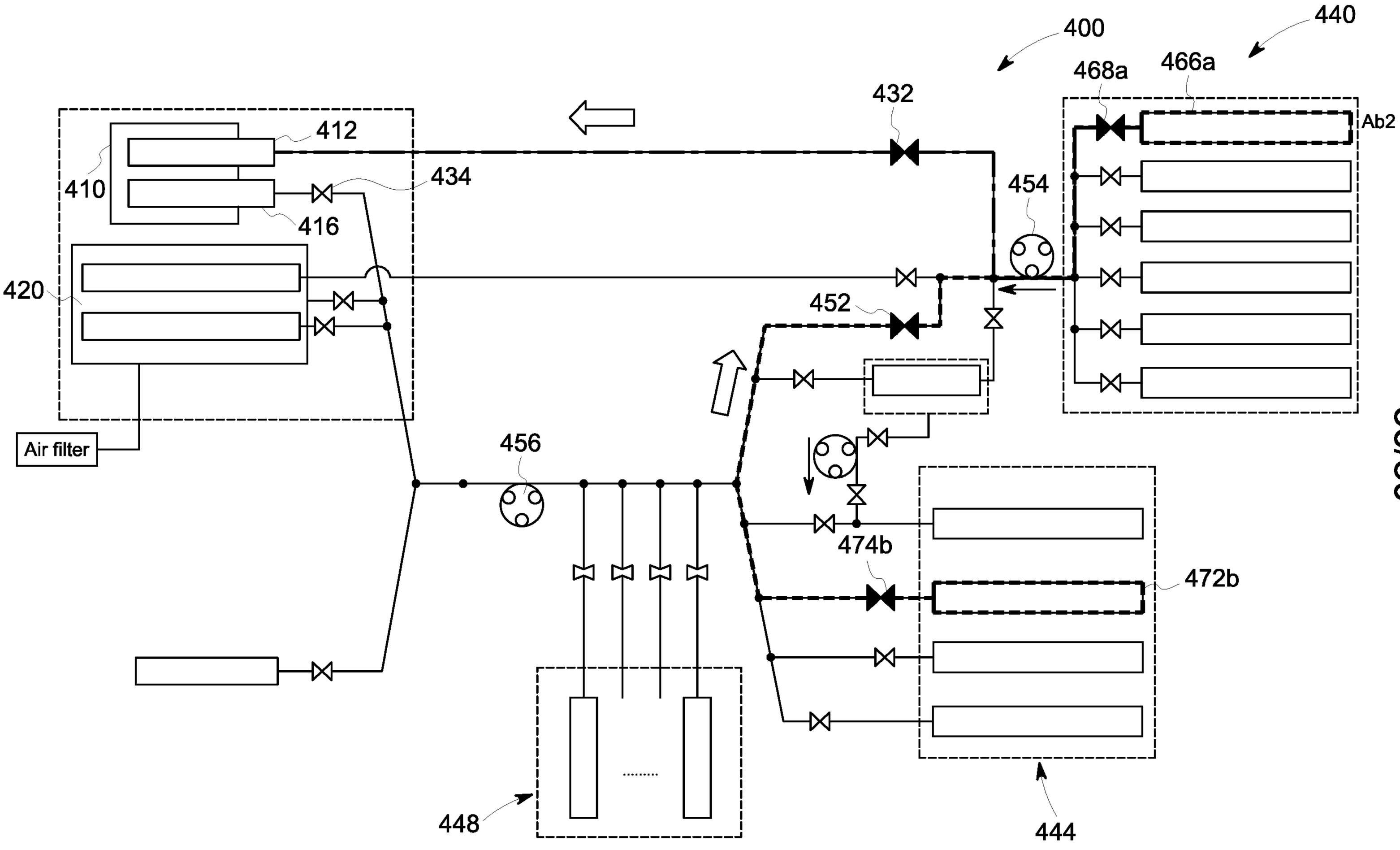
400
440
468a
466a
Ab2
432
412
410
434
416
454
420
452
Air filter
456
474b
472b
448
444

FIG. 57

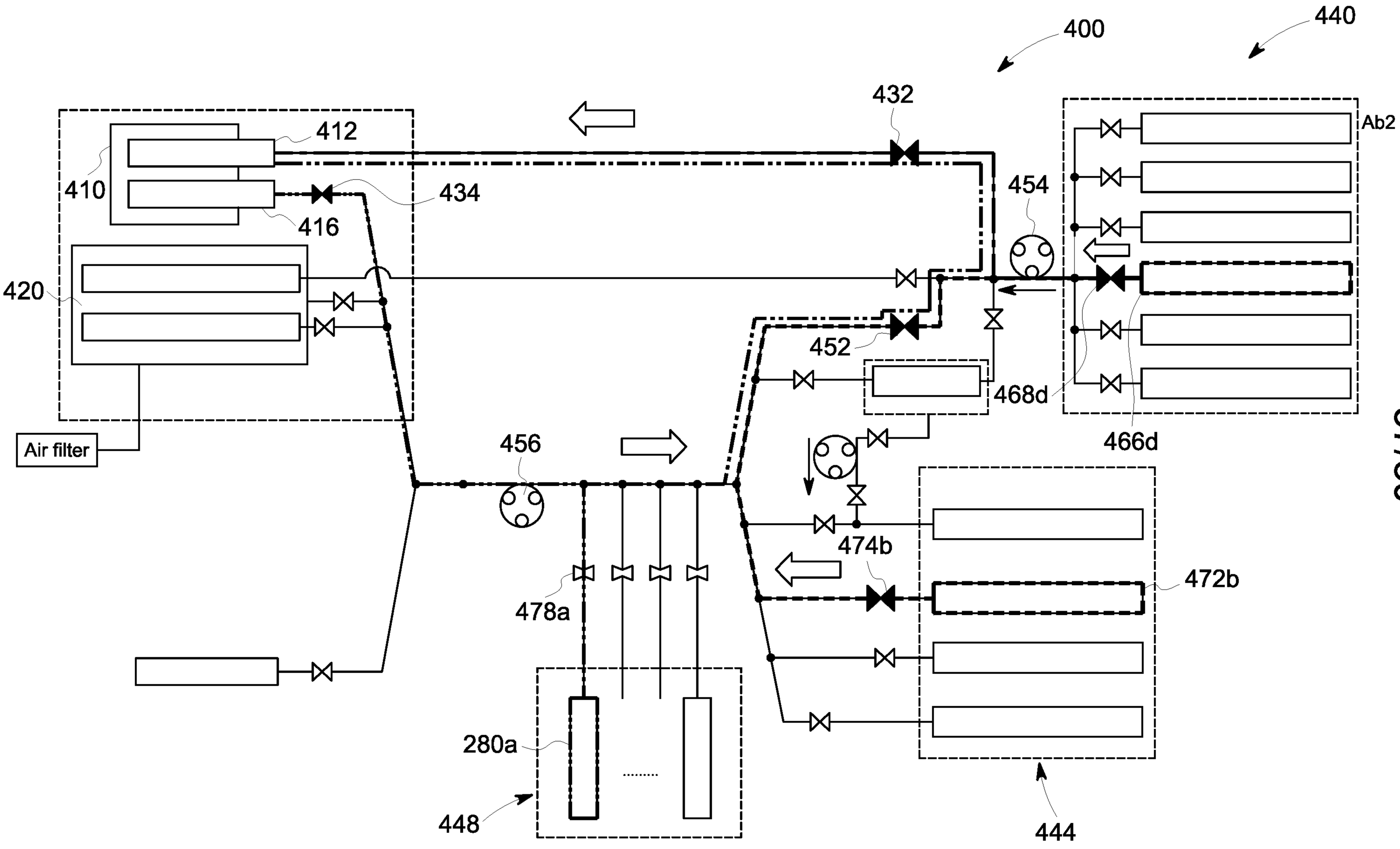
400
440
432
412
410
434
416
420
Air filter
454
Ab2
452
468d
466d
456
474b
472b
478a
280a
448
444

FIG. 58

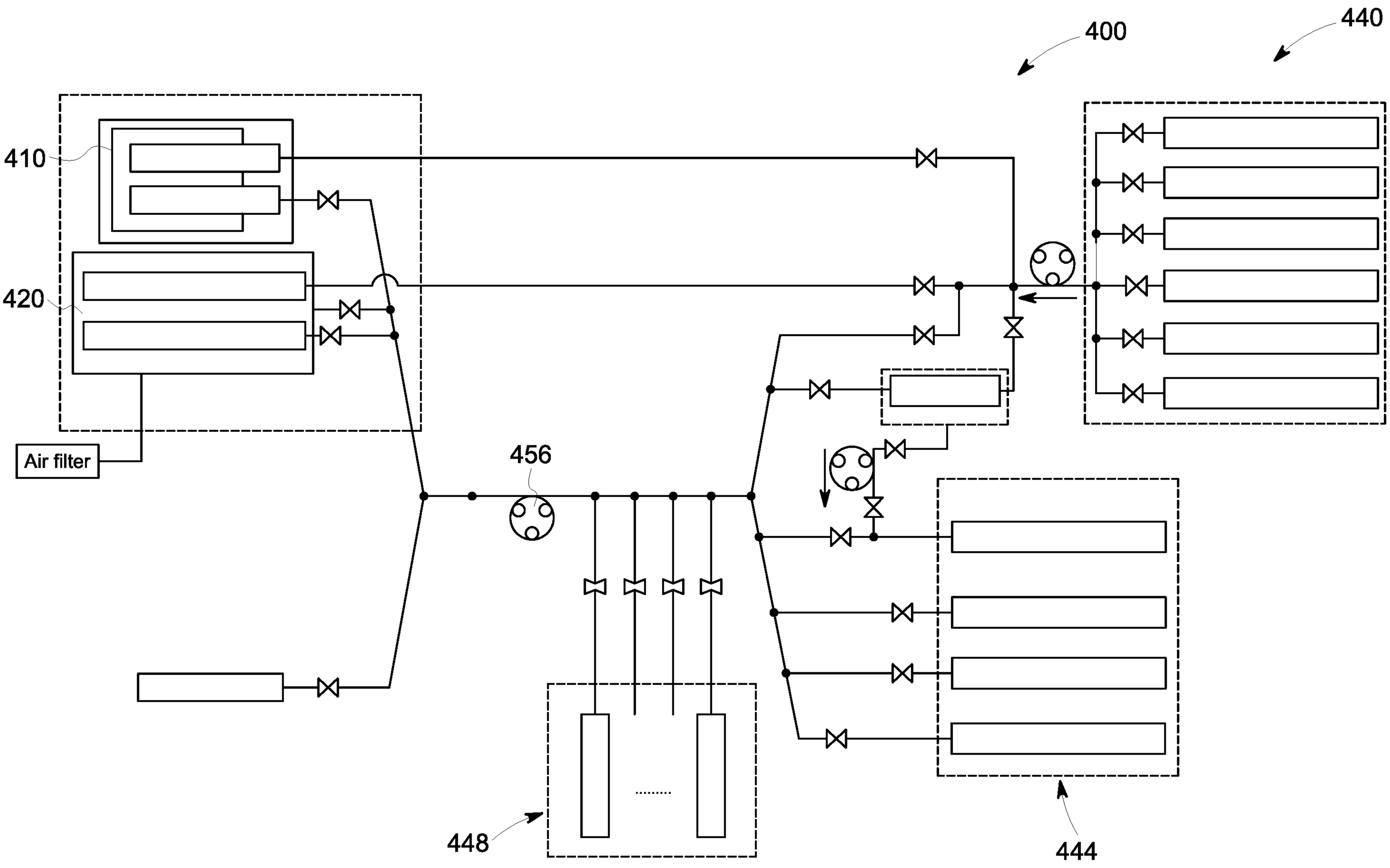

FIG. 59

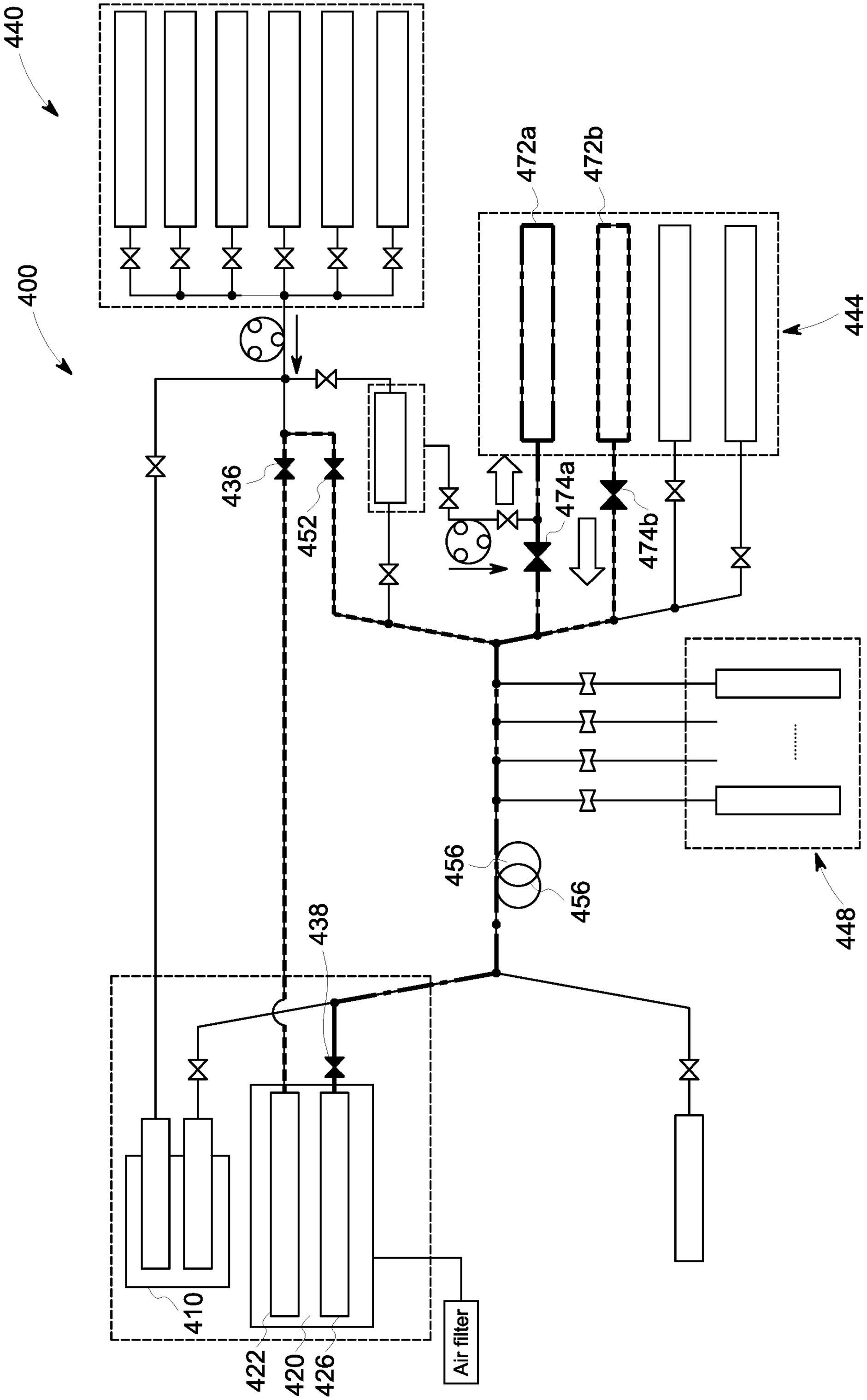
440
400
472a
472b
444
436
452
474a
474b
456
456
438
448
410
422
420
426
Air filter

FIG. 60

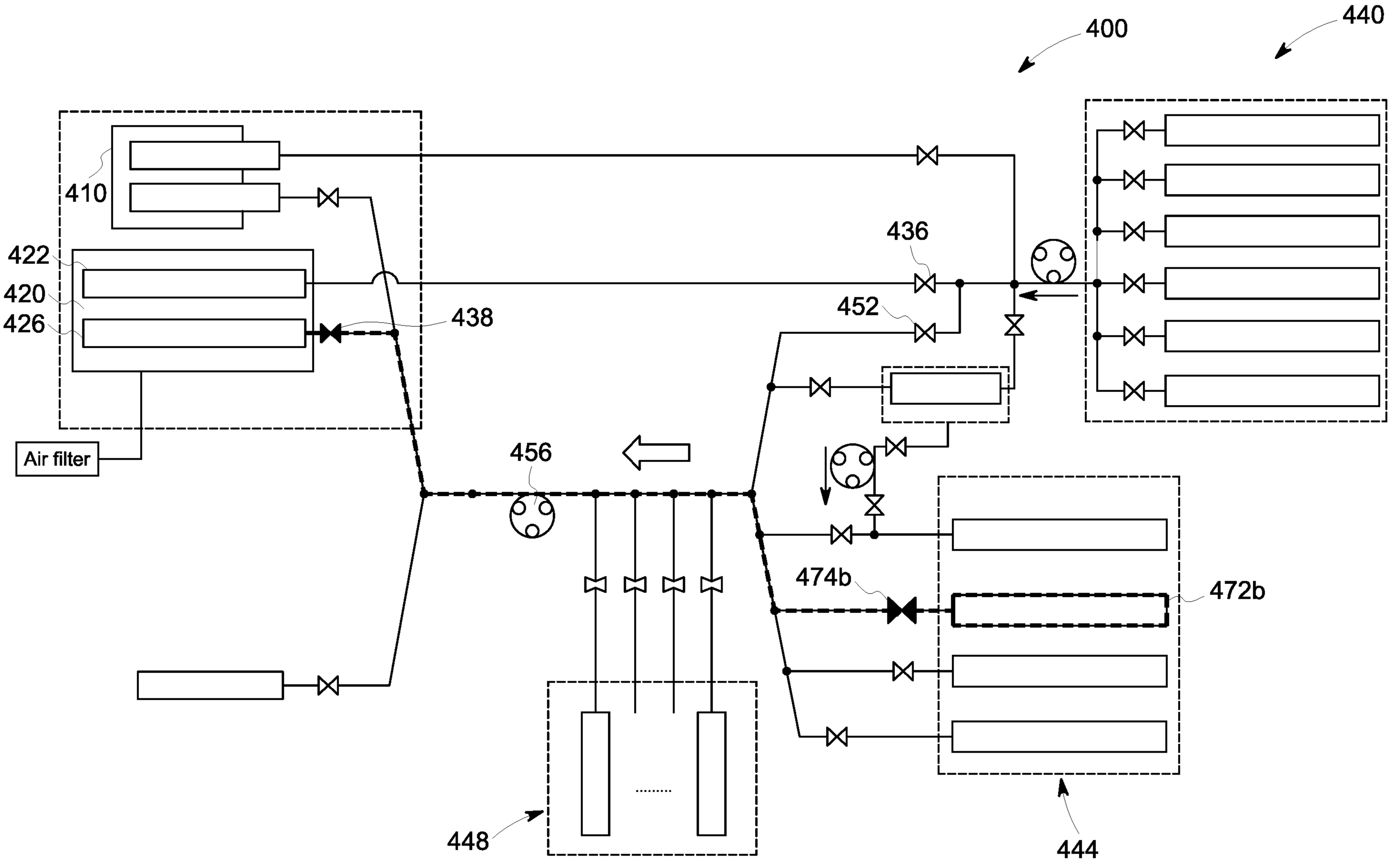
400
440
410
422
420
426
438
436
452
Air filter
456
474b
472b
448
444

FIG. 61

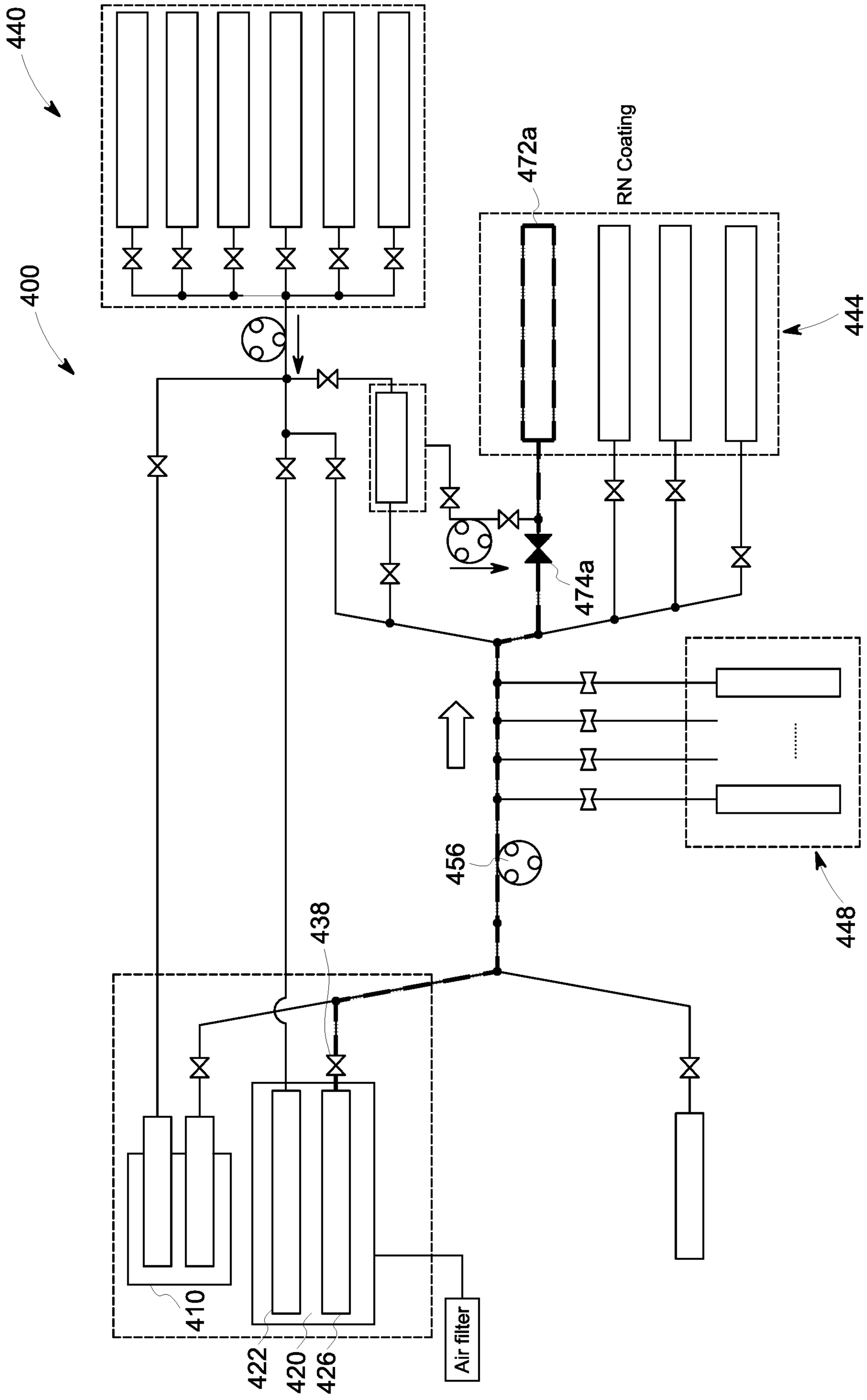
440
400
472a
RN Coating
444
474a
456
448
438
410
422
420
426
Air filter

FIG. 62

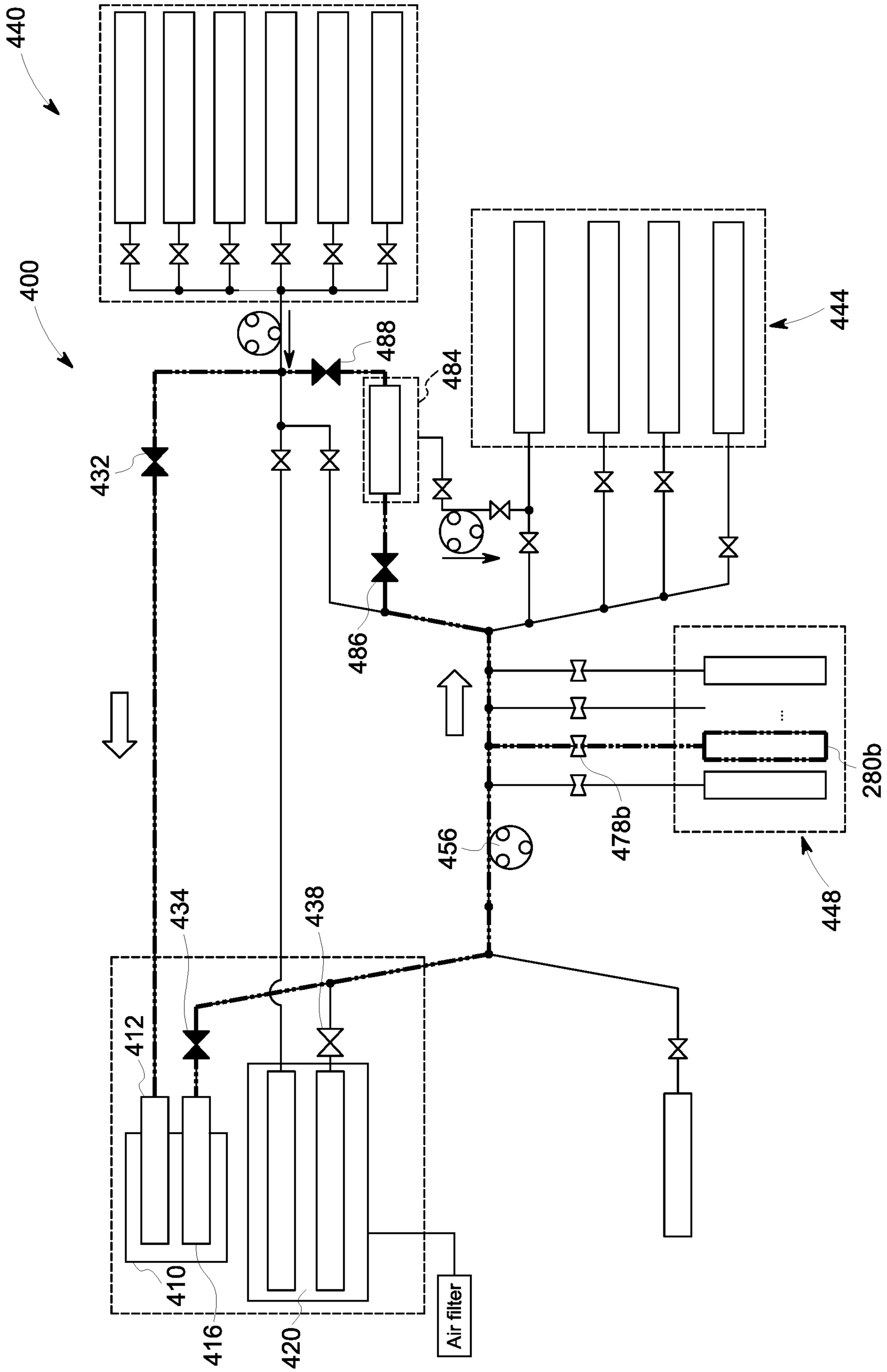
440
400
444
488
484
432
486
478b
280b
456
448
434
438
412
410
416
420
Air filter

FIG. 63

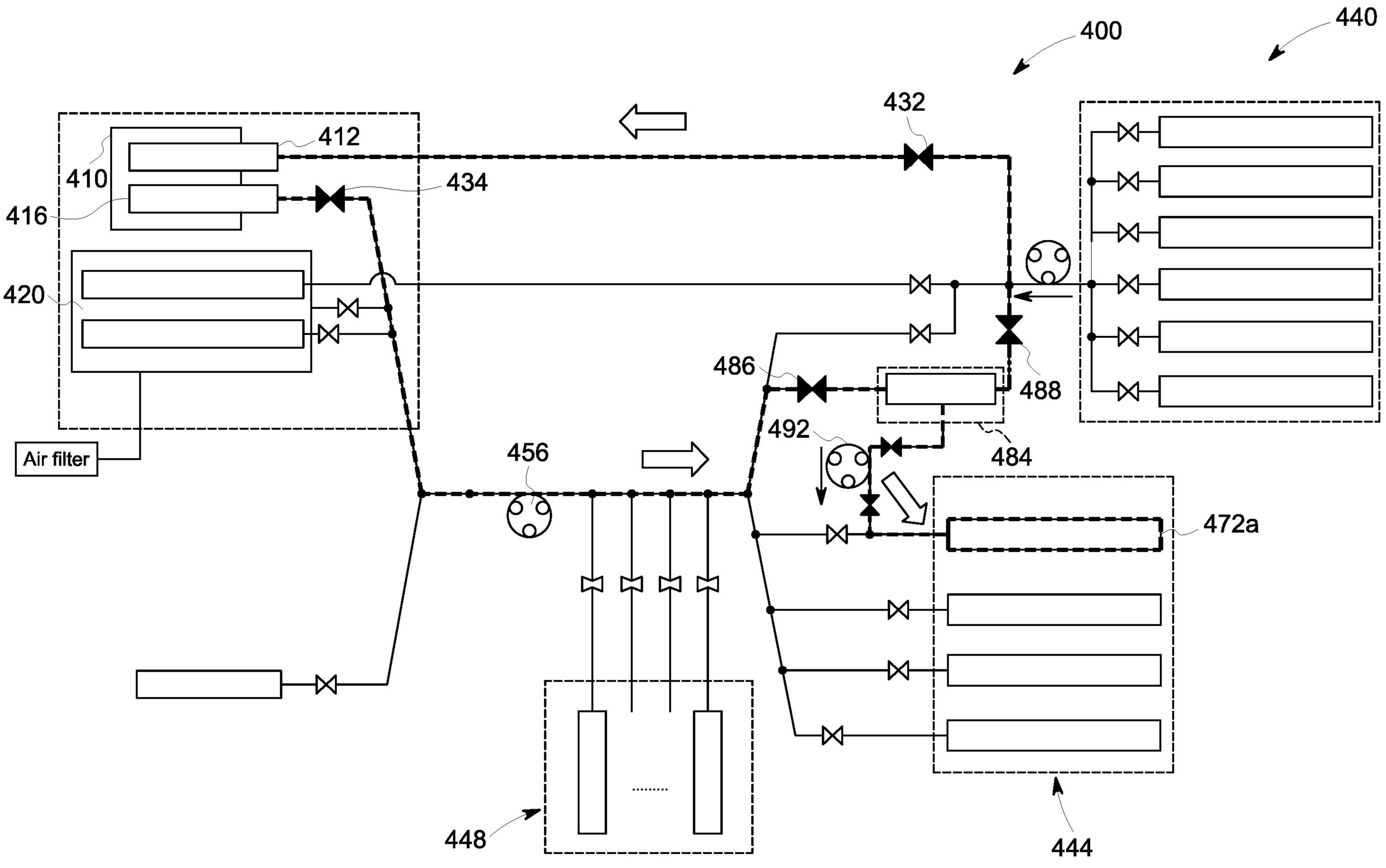
400
440
432
412
410
434
416
420
Air filter
456
486
488
492
484
472a
448
444

FIG. 64

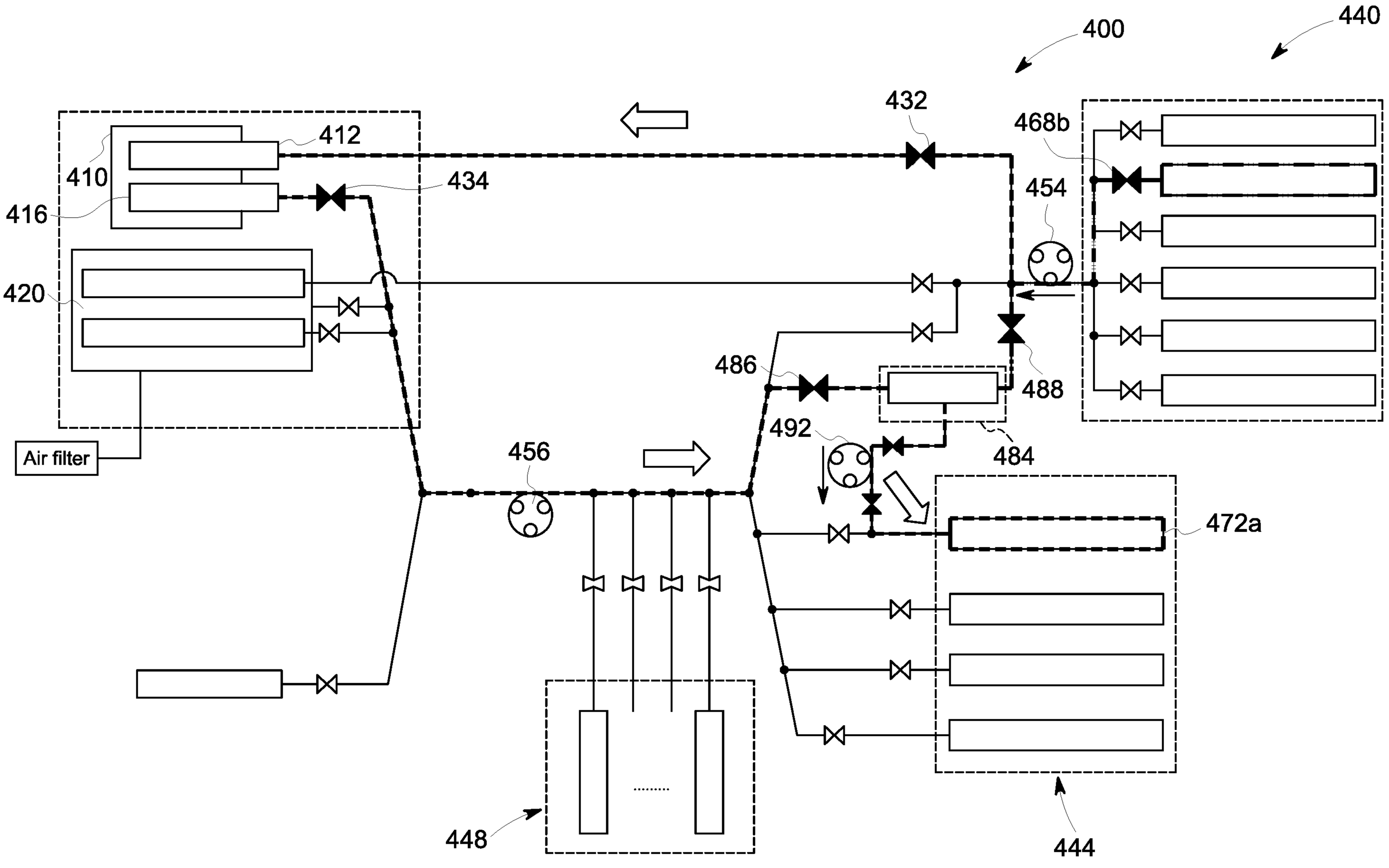
400
440
410
412
416
434
432
468b
454
420
486
488
492
484
456
472a
Air filter
448
444

FIG. 65

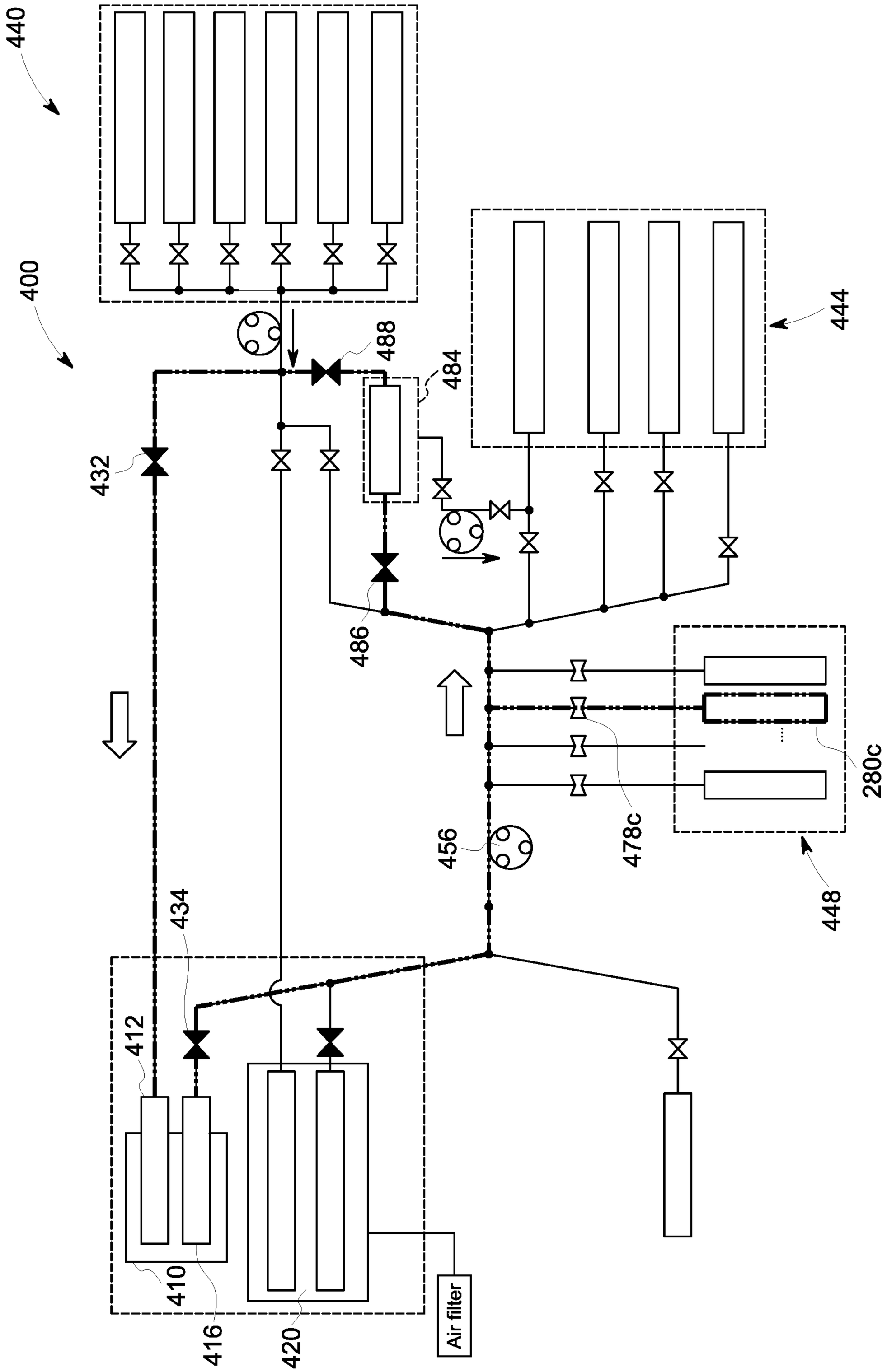
440
400
488
484
444
432
486
456
478c
280c
448
434
412
410
416
420
Air filter

FIG. 66

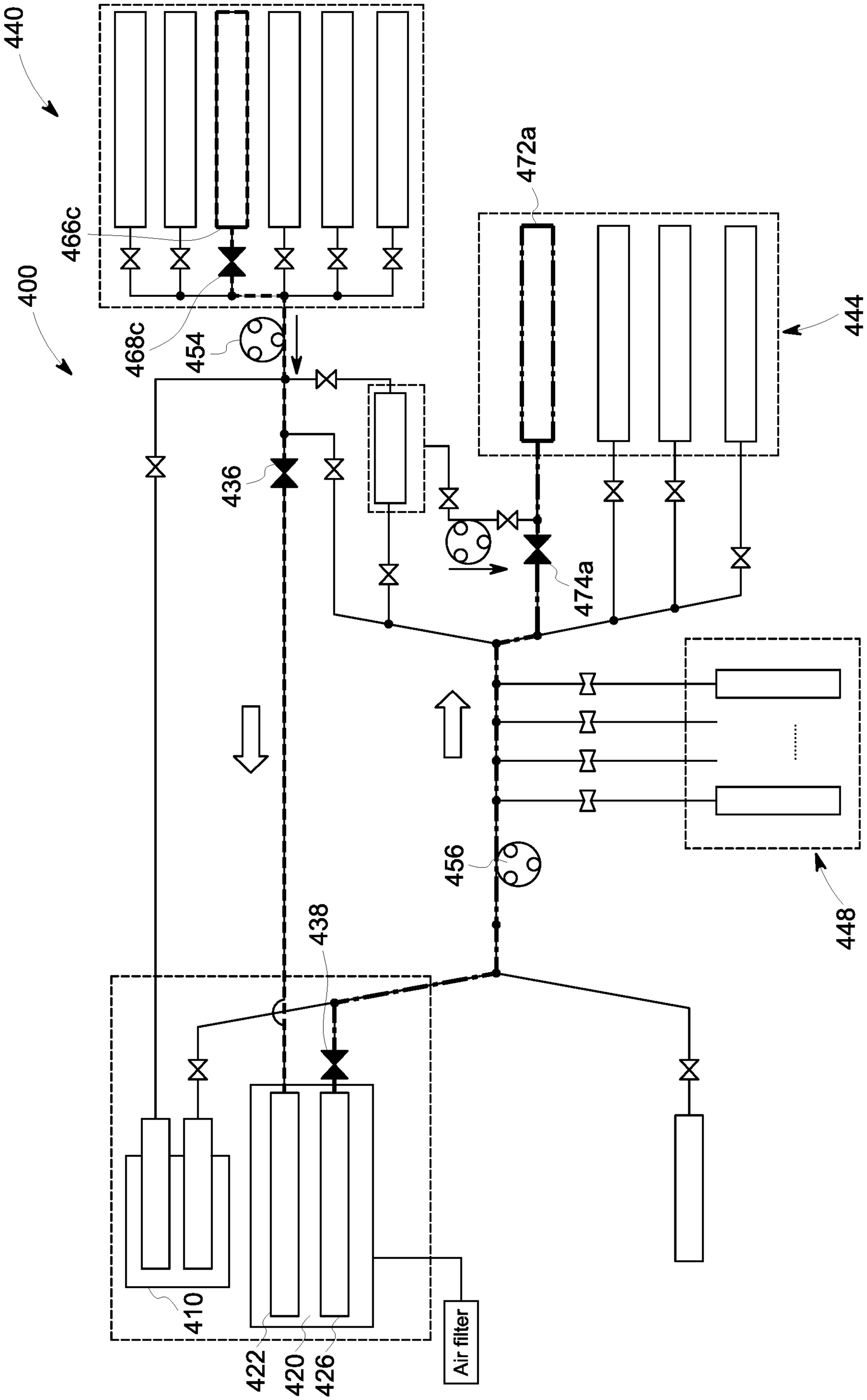
440
466c
400
468c
454
436
444
474a
456
438
448
410
422
420
426
Air filter

FIG. 67

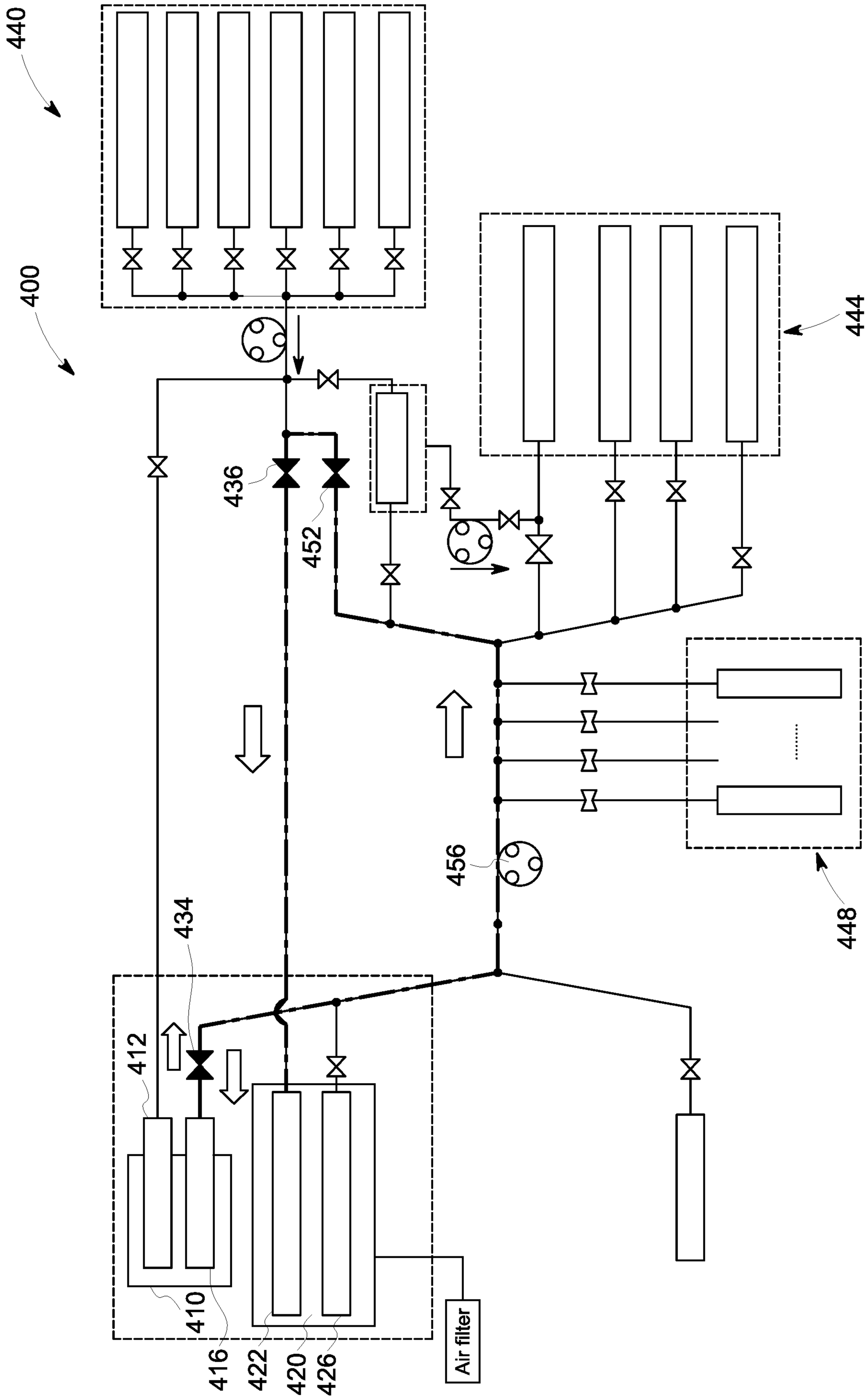
400
440
444
436
452
456
448
434
412
410
416
422
420
426
Air filter

FIG. 68

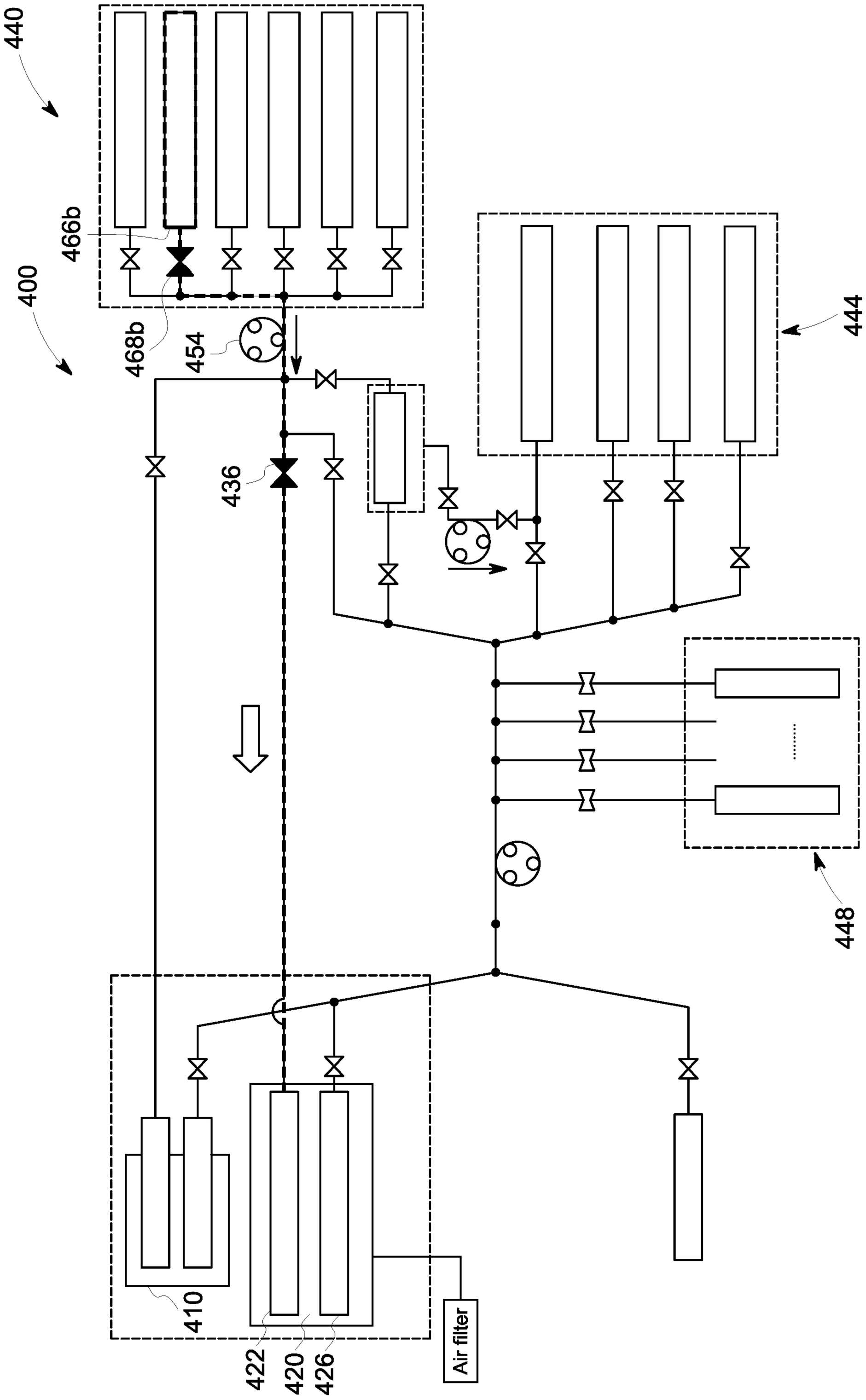

FIG. 69

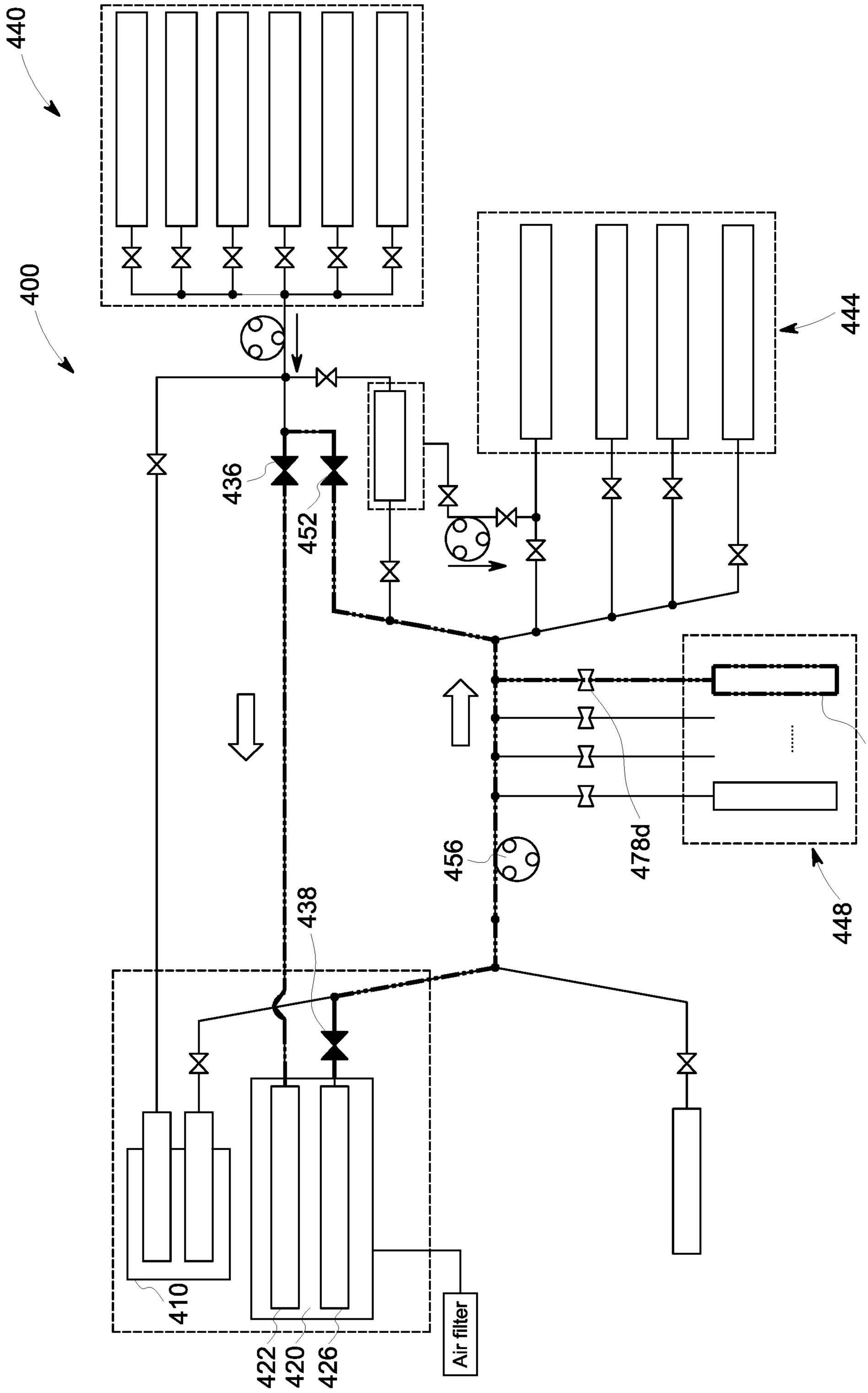
400
440
444
436
452
456
478d
280d
448
438
410
422
420
426
Air filter

FIG. 70

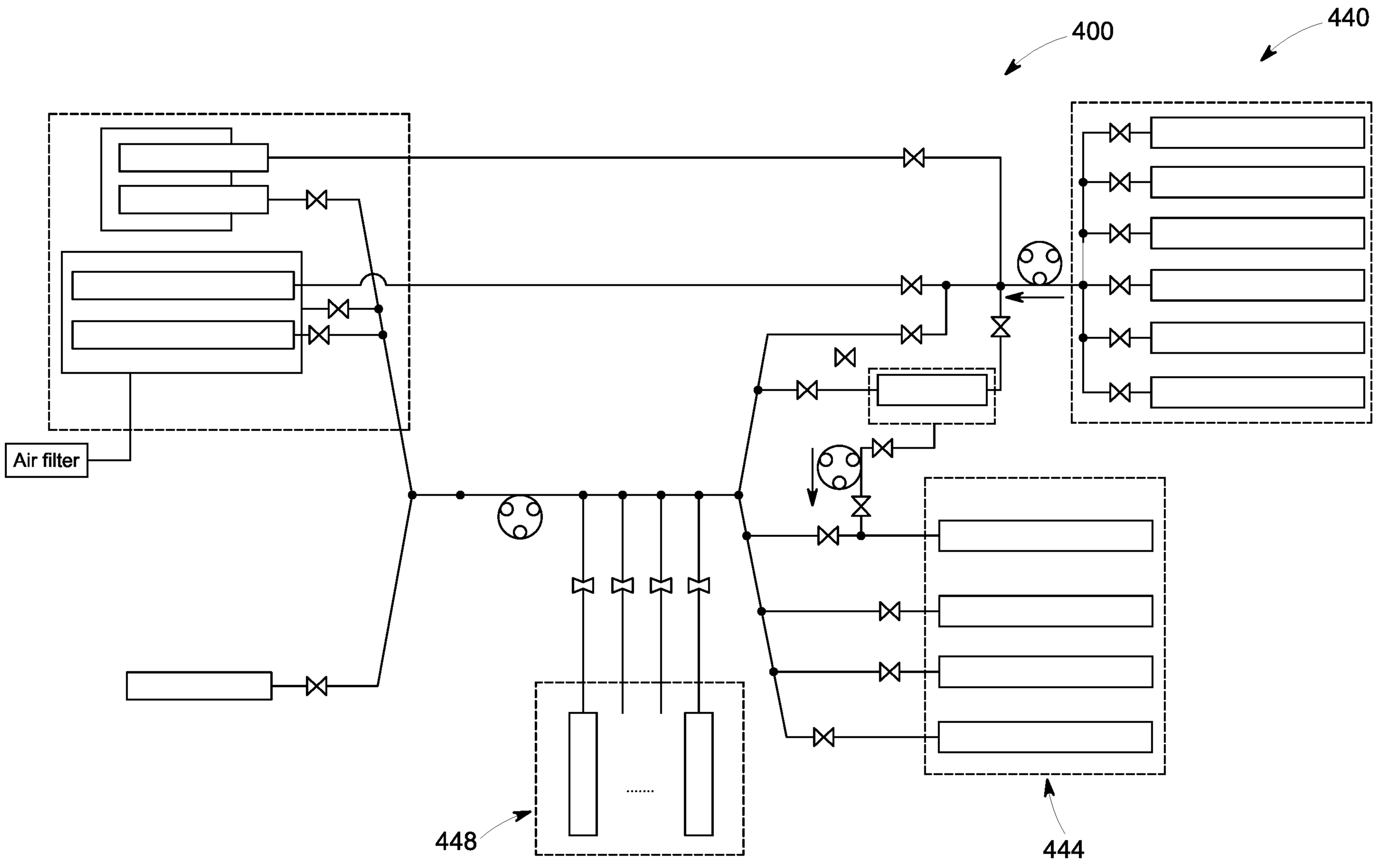

FIG. 71

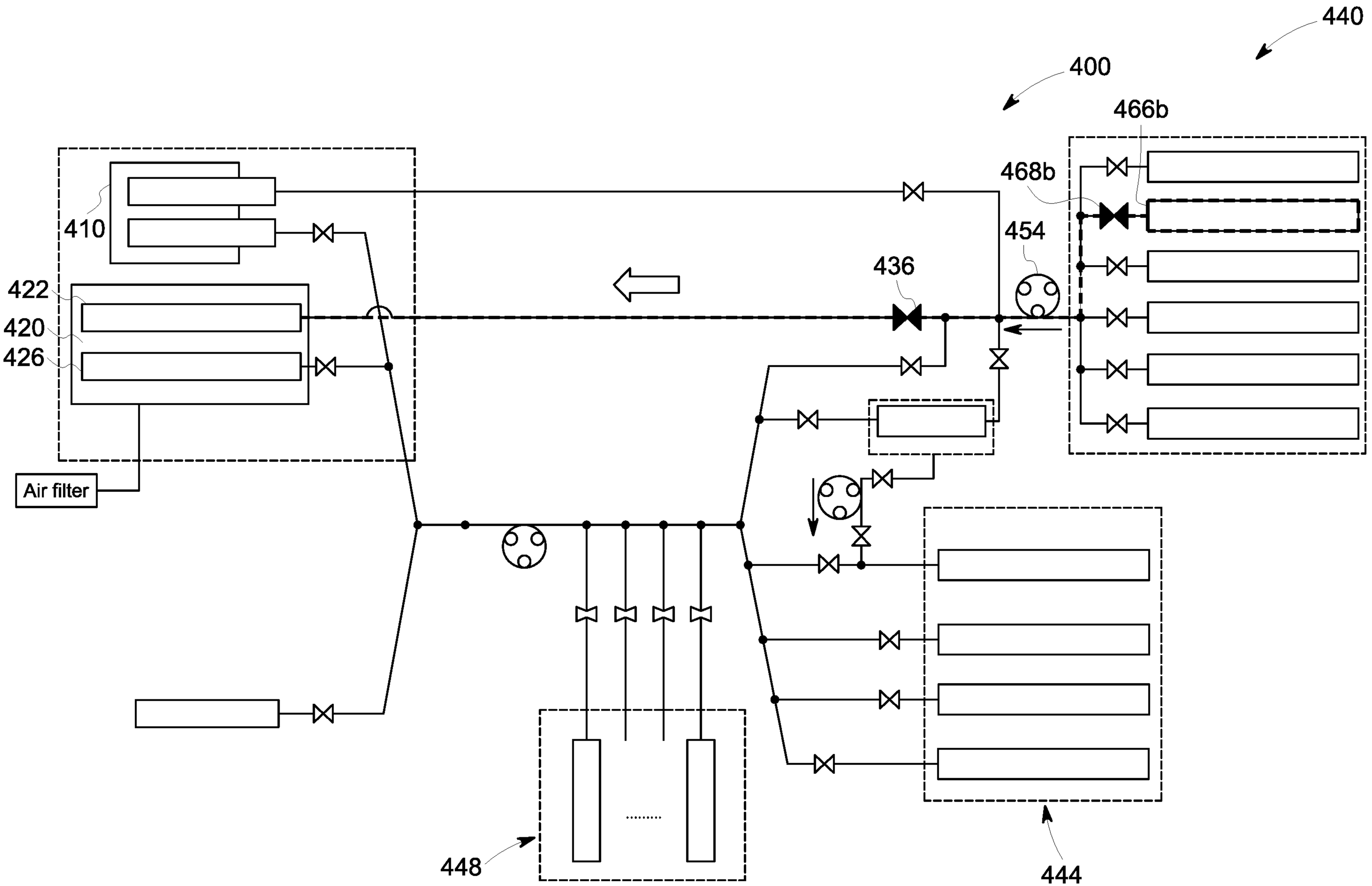

FIG. 72

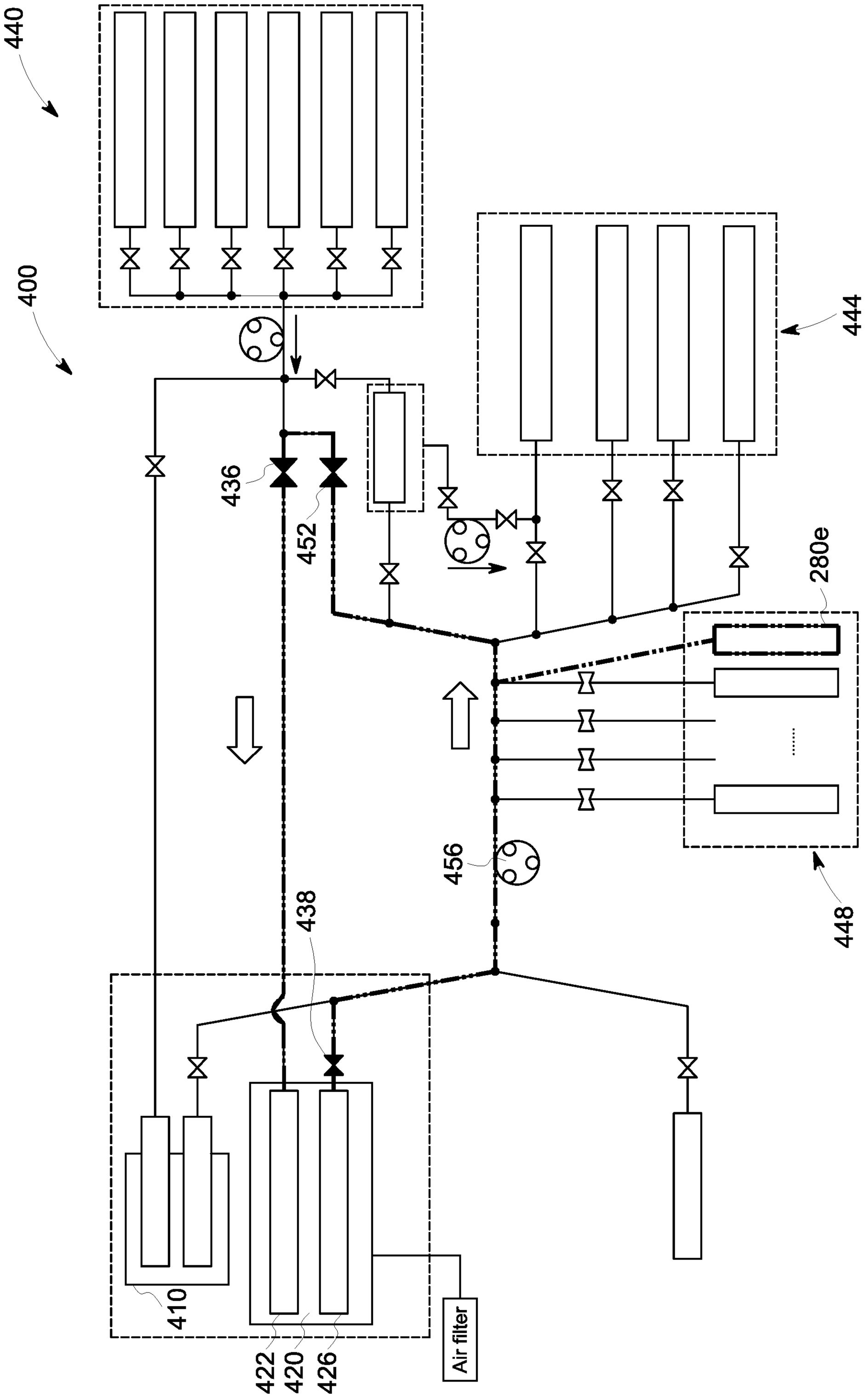

FIG. 73

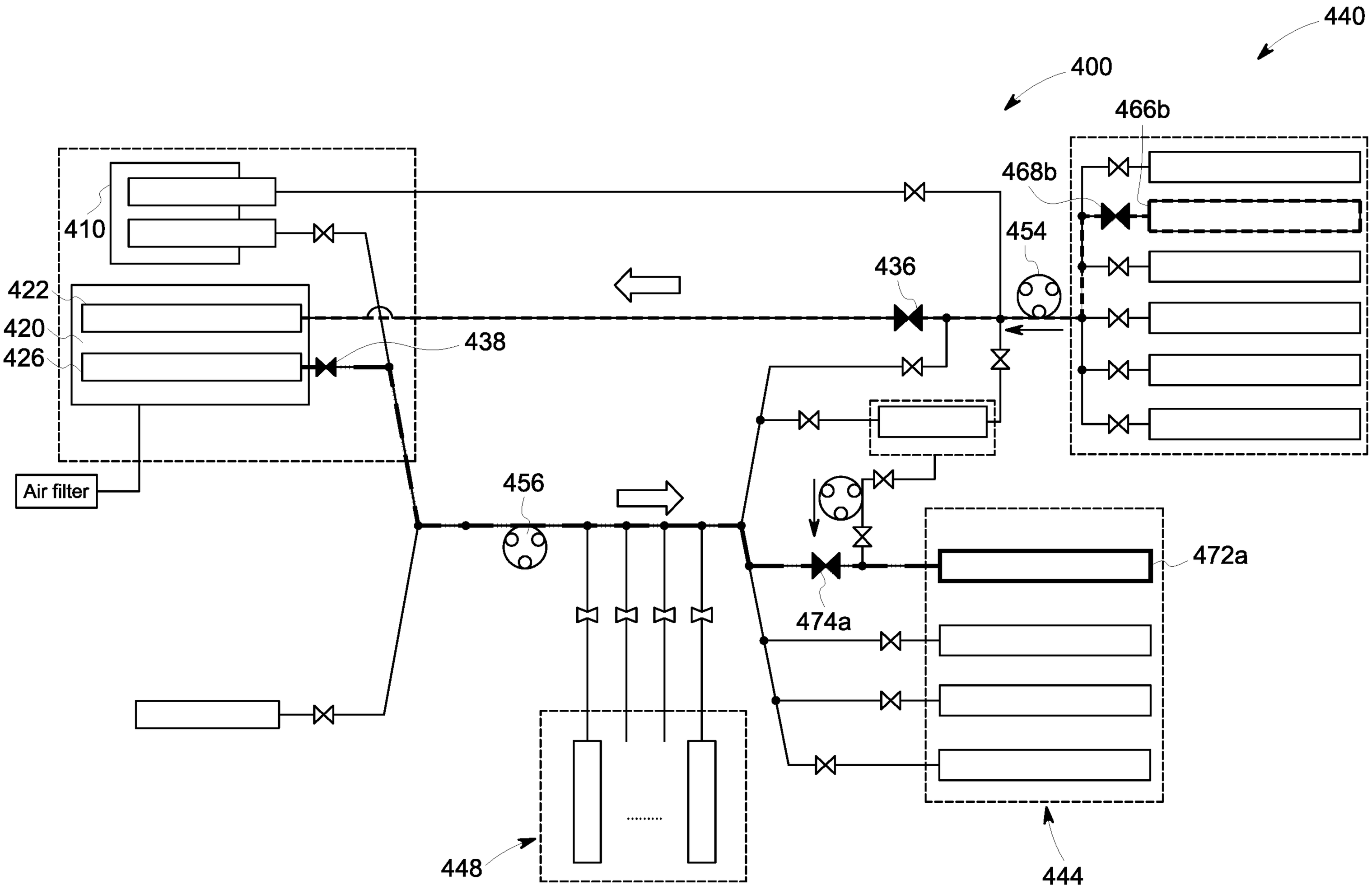
440
400
466b
468b
454
410
436
422
420
426
438
Air filter
456
472a
474a
448
444

FIG. 74

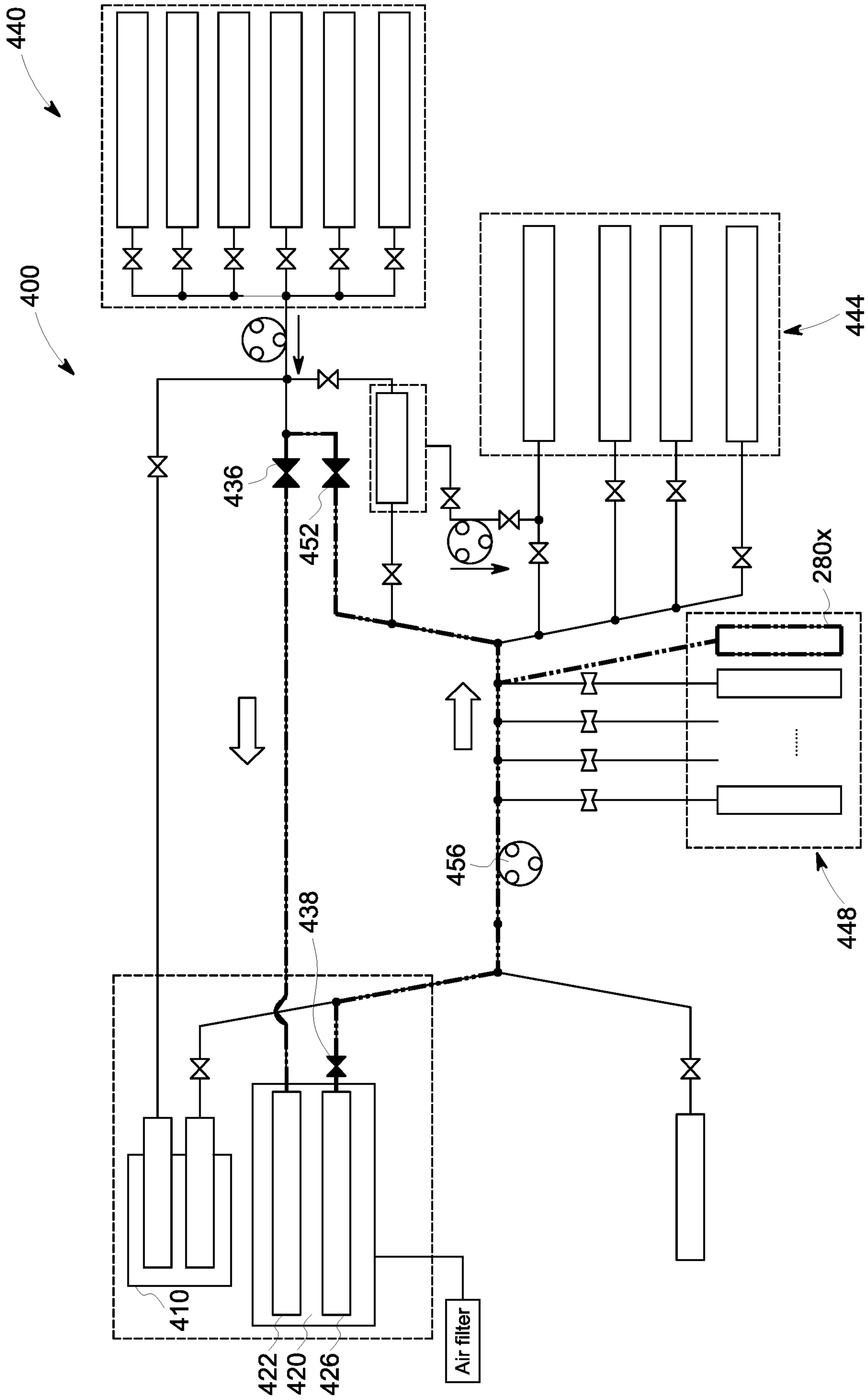

FIG. 75

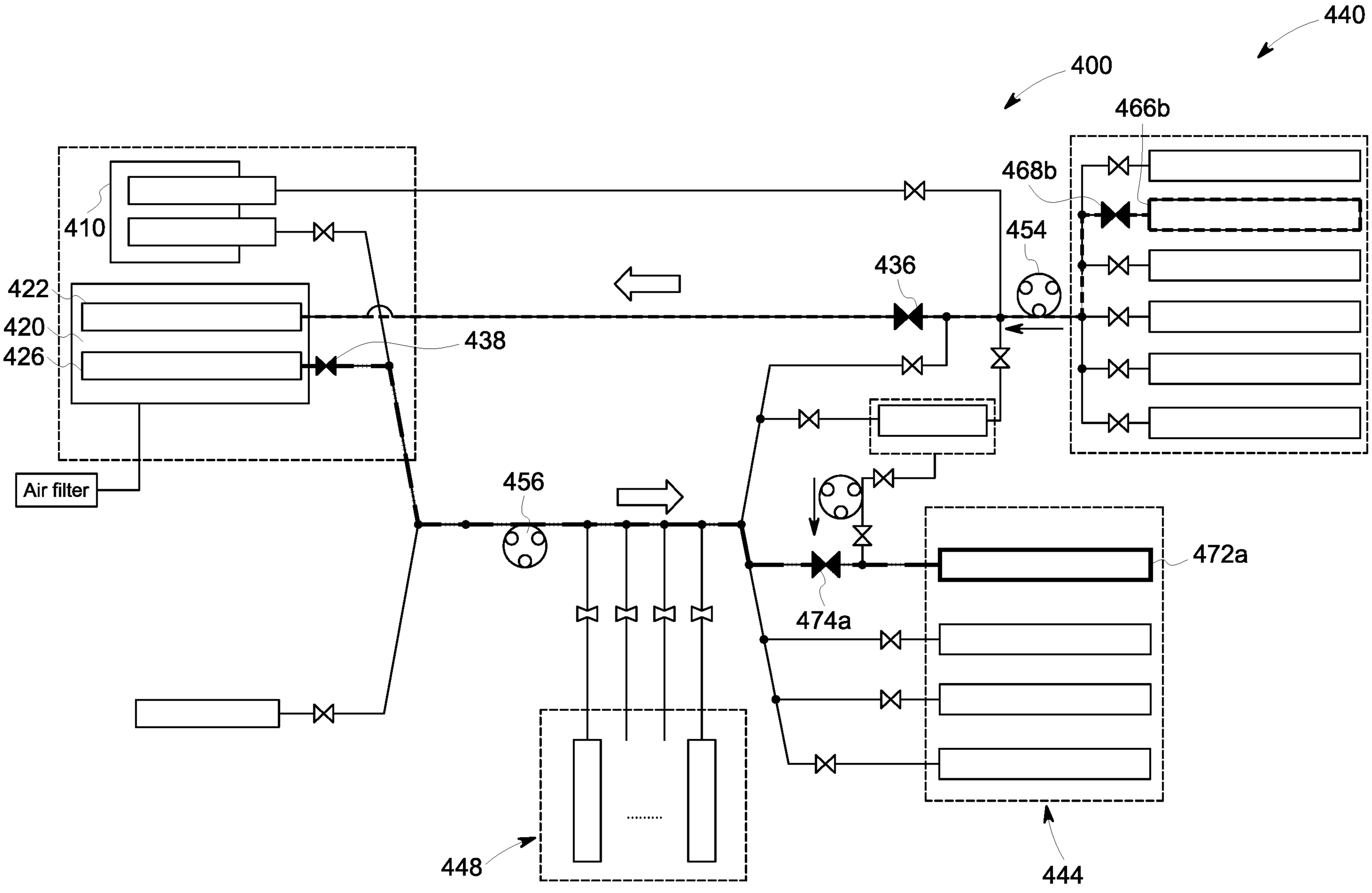
440
400
466b
468b
454
410
436
422
420
426
438
Air filter
456
472a
474a
448
444

FIG. 76

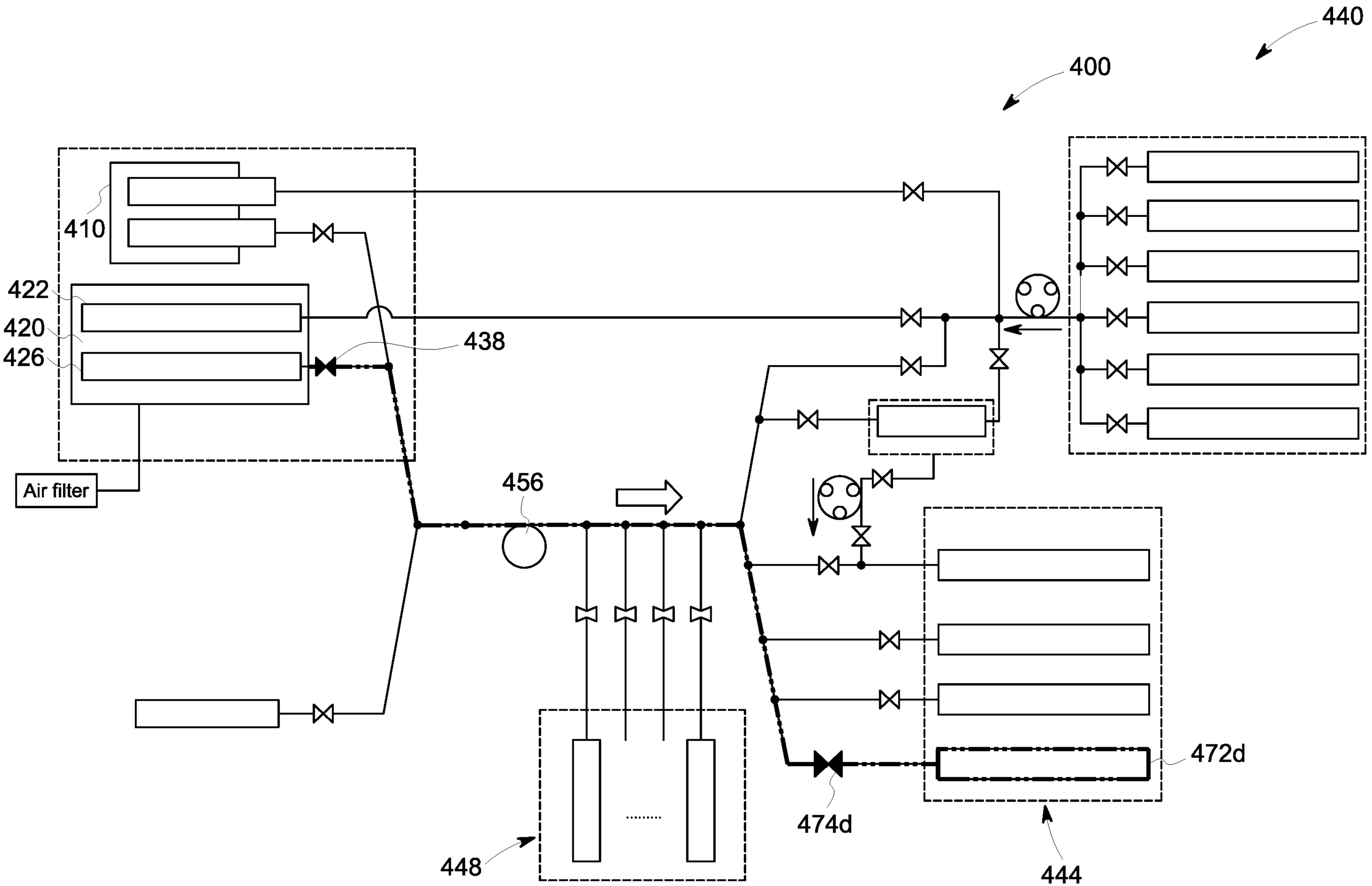

FIG. 77

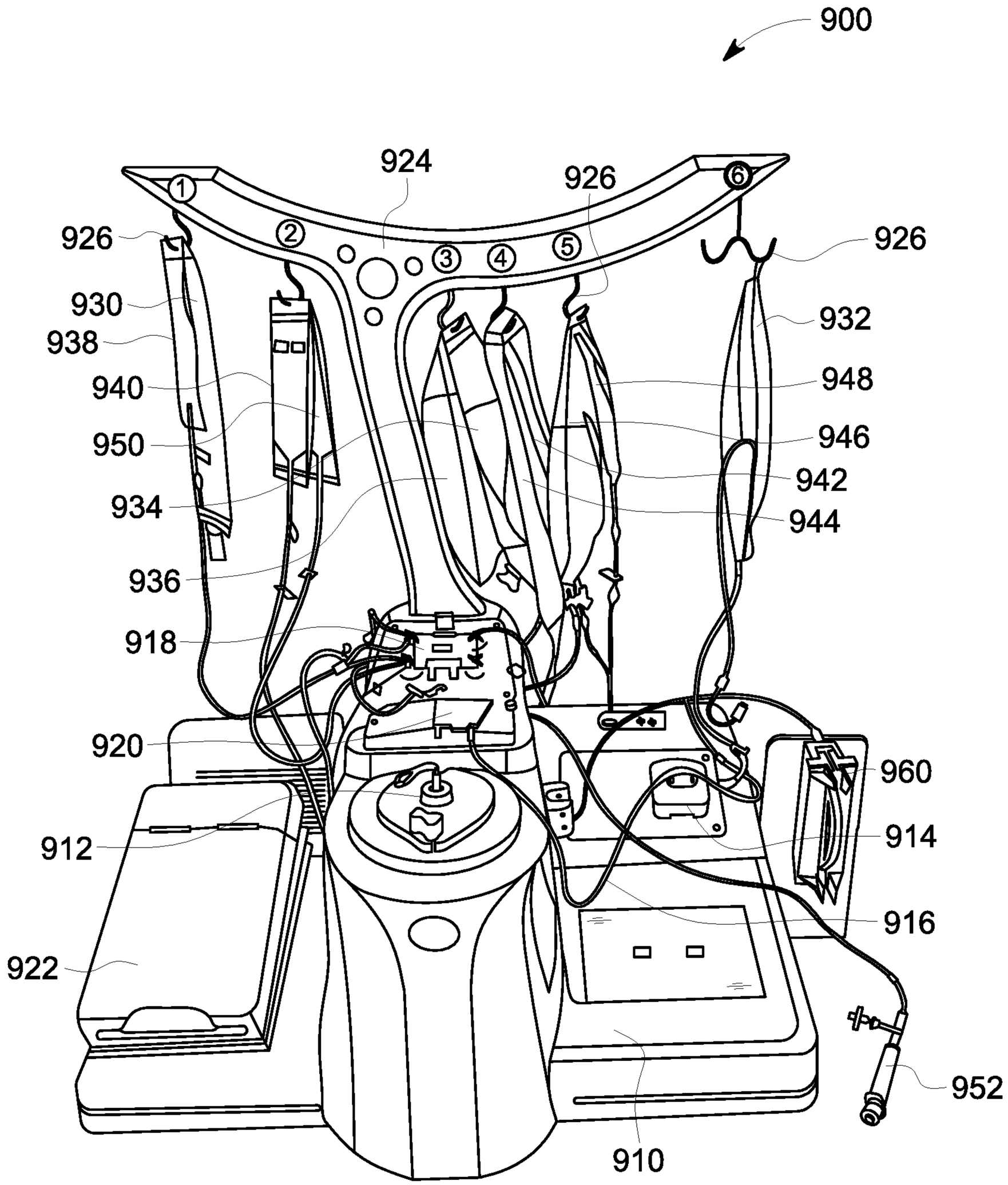
900
924
926
926
926
930
938
940
950
934
936
918
920
912
922
932
948
946
942
944
960
914
916
952
910

FIG. 78

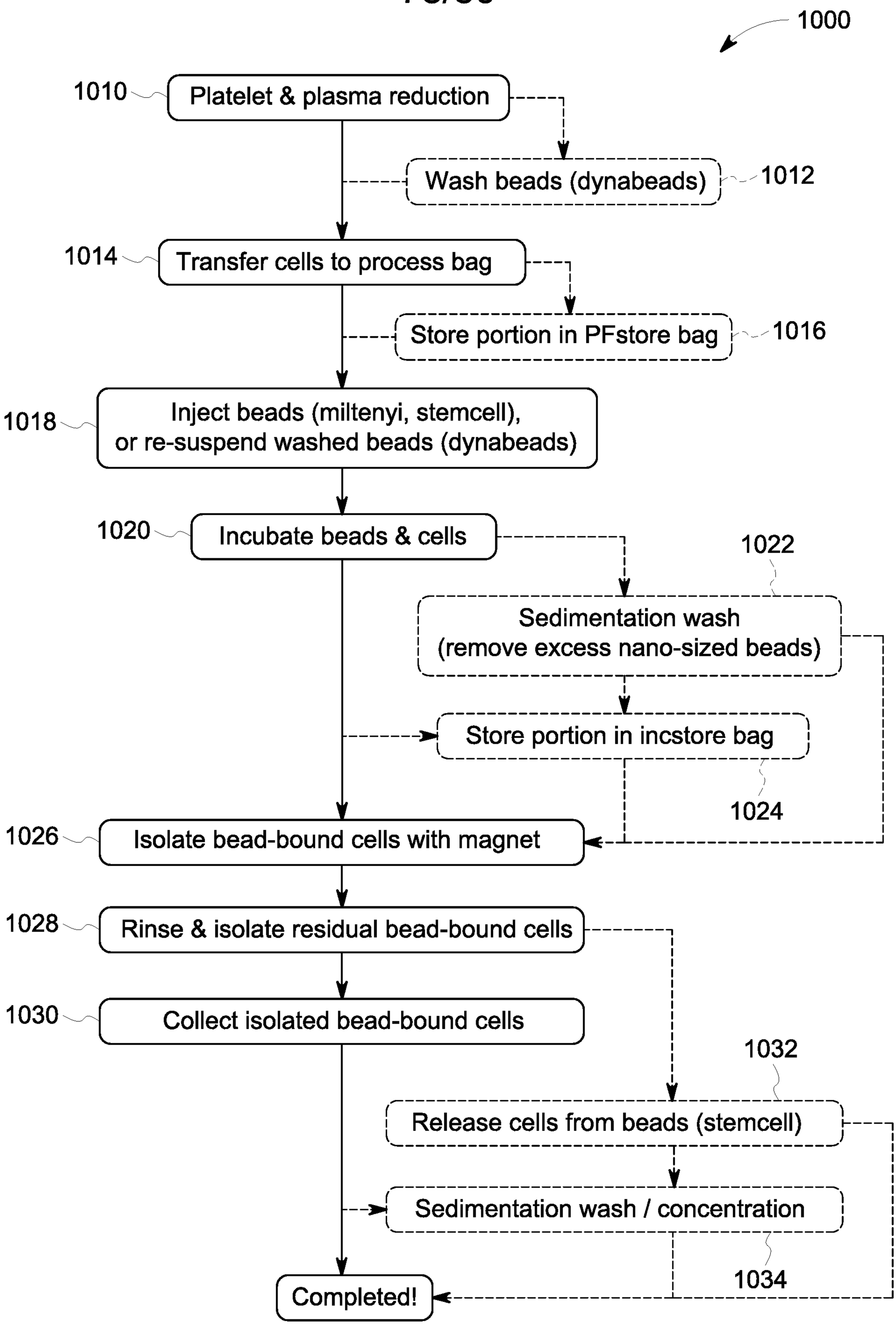
1000
1010
Platelet & plasma reduction
Wash beads (dynabeads)
1012
1014
Transfer cells to process bag
Store portion in PFstore bag
1016
1018
Inject beads (miltenyi, stemcell),
or re-suspend washed beads (dynabeads)
1020
Incubate beads & cells
1022
Sedimentation wash
(remove excess nano-sized beads)
Store portion in incstore bag
1024
1026
Isolate bead-bound cells with magnet
1028
Rinse & isolate residual bead-bound cells
1030
Collect isolated bead-bound cells
1032
Release cells from beads (stemcell)
Sedimentation wash / concentration
1034
Completed!

FIG. 79

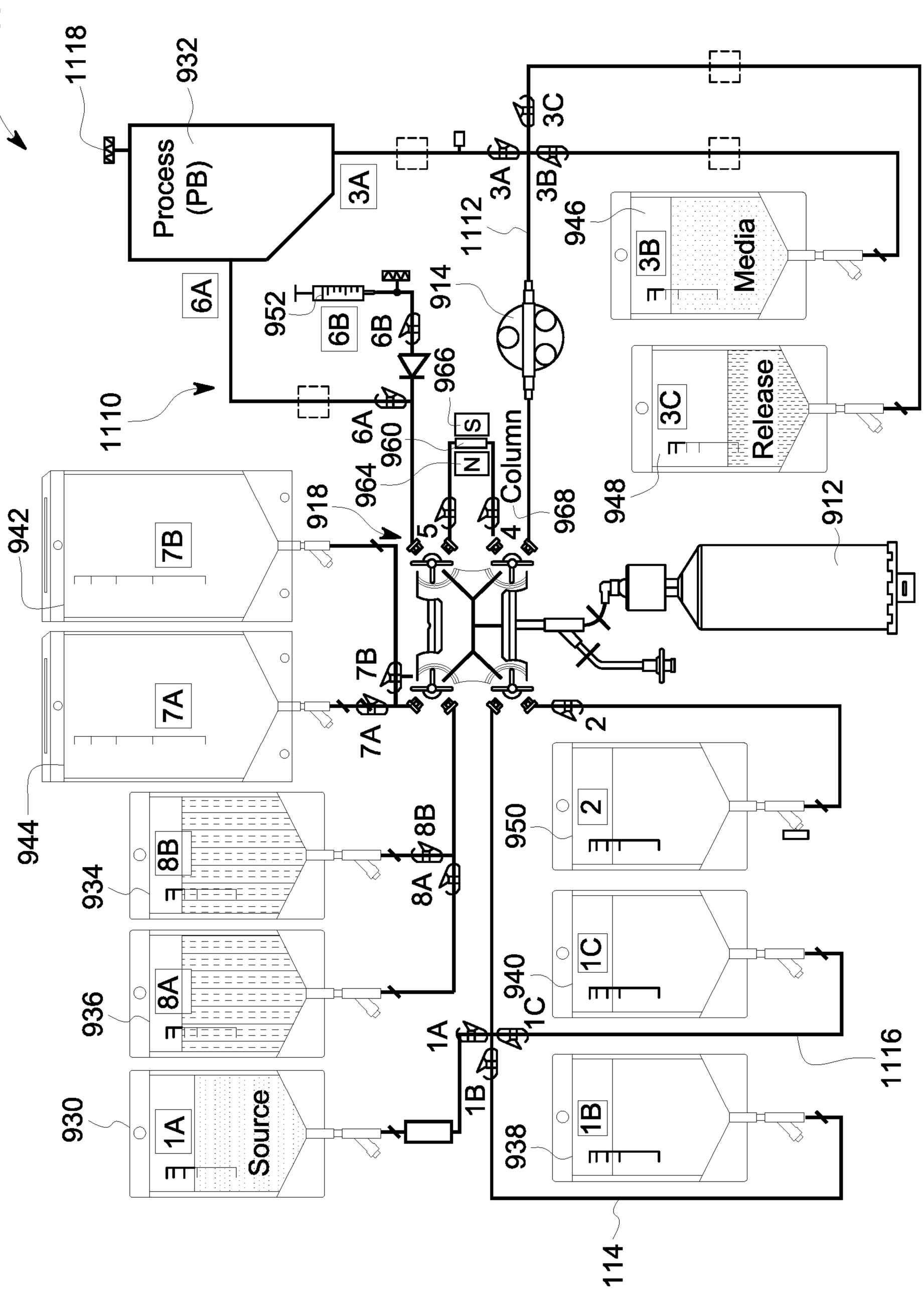
1100
1118
932
Process (PB)
3A
6A
6B
952
914
1112
946
Media
3B
3C
Release
966
1110
960
964
Column
968
948
912
942
7B
918
5
4
7A
2
944
8B
934
8A
936
1A
930
Source
1B
950
1C
940
938
1116
1114

FIG. 80

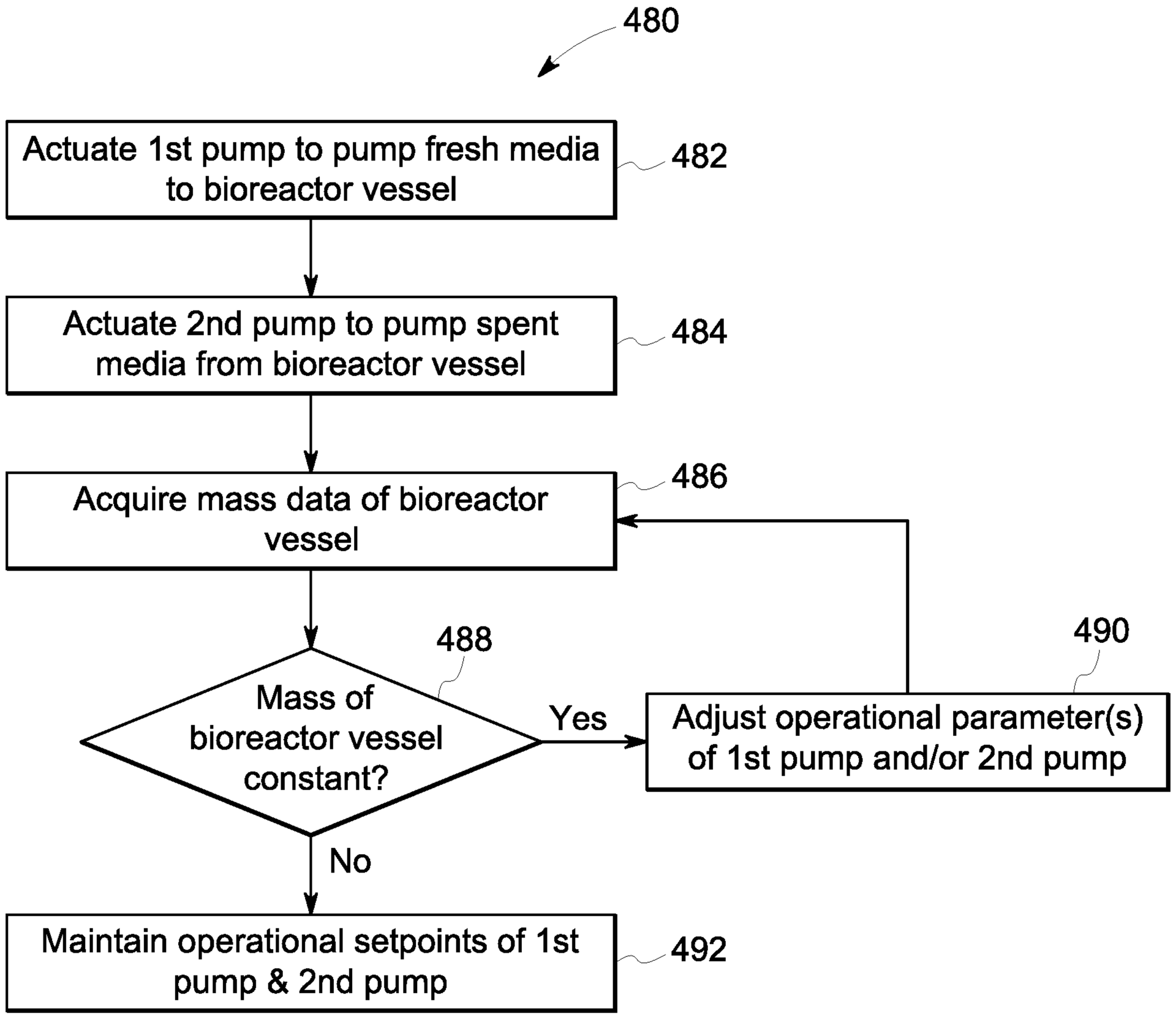
480
Actuate 1st pump to pump fresh media to bioreactor vessel
482
Actuate 2nd pump to pump spent media from bioreactor vessel
484
Acquire mass data of bioreactor vessel
486
488
Mass of bioreactor vessel constant?
Yes
No
490
Adjust operational parameter(s) of 1st pump and/or 2nd pump
Maintain operational setpoints of 1st pump & 2nd pump
492

FIG. 81