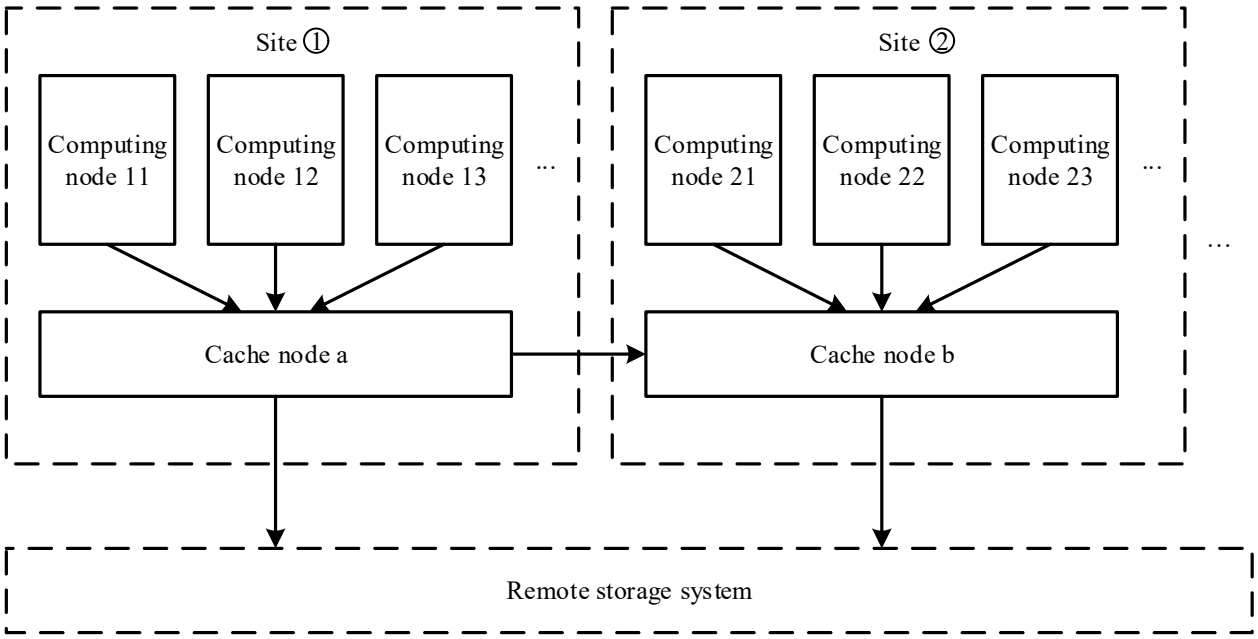
Site ①
Computing node 11
Computing node 12
Computing node 13
...
Site ②
Computing node 21
Computing node 22
Computing node 23
...
...
Cache node a
Cache node b
Remote storage system

FIG. 1

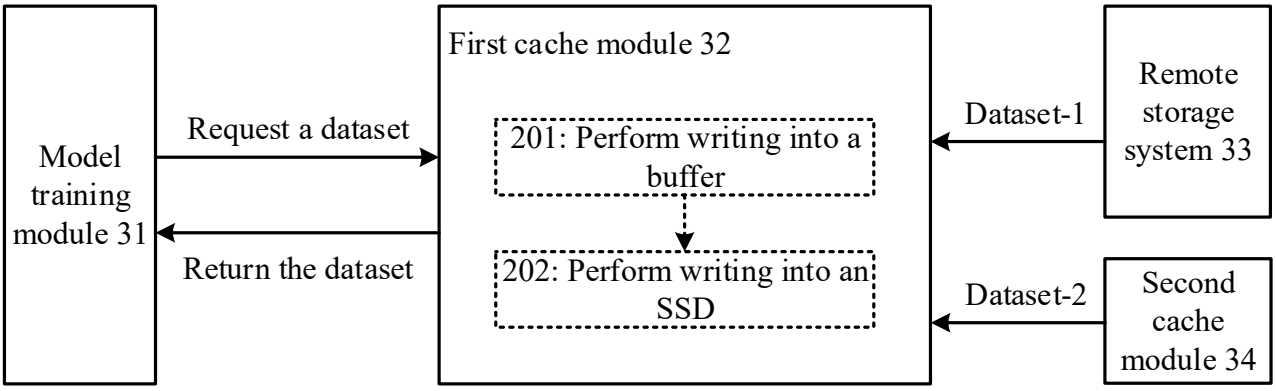
Model training module 31
Request a dataset
Return the dataset
First cache module 32
201: Perform writing into a buffer
202: Perform writing into an SSD
Dataset-1
Dataset-2
Remote storage system 33
Second cache module 34

FIG. 2

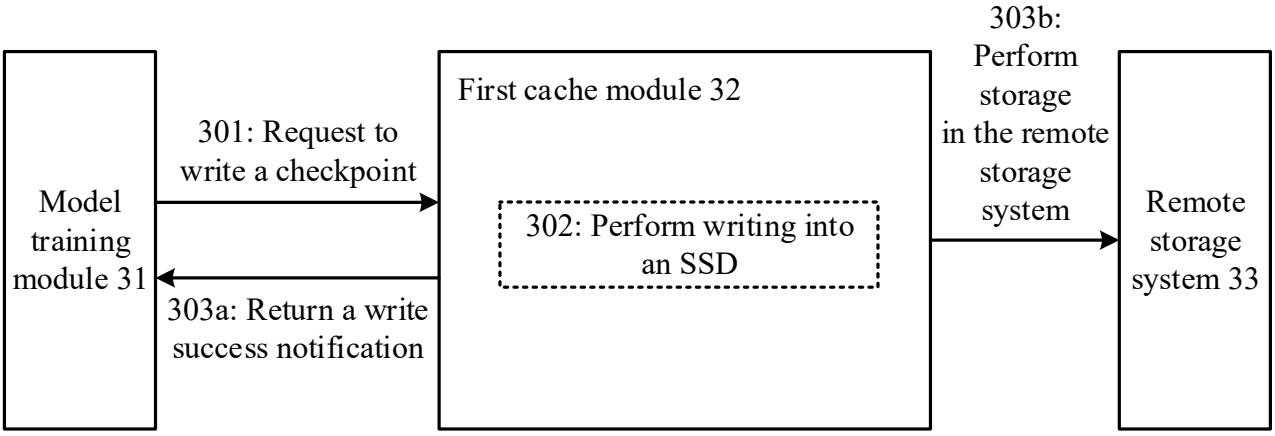

FIG. 3

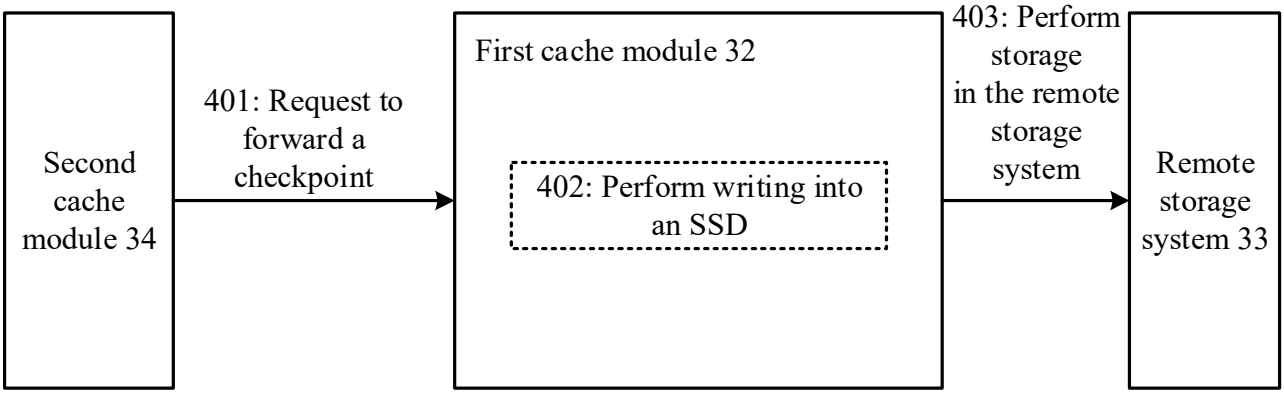

FIG. 4

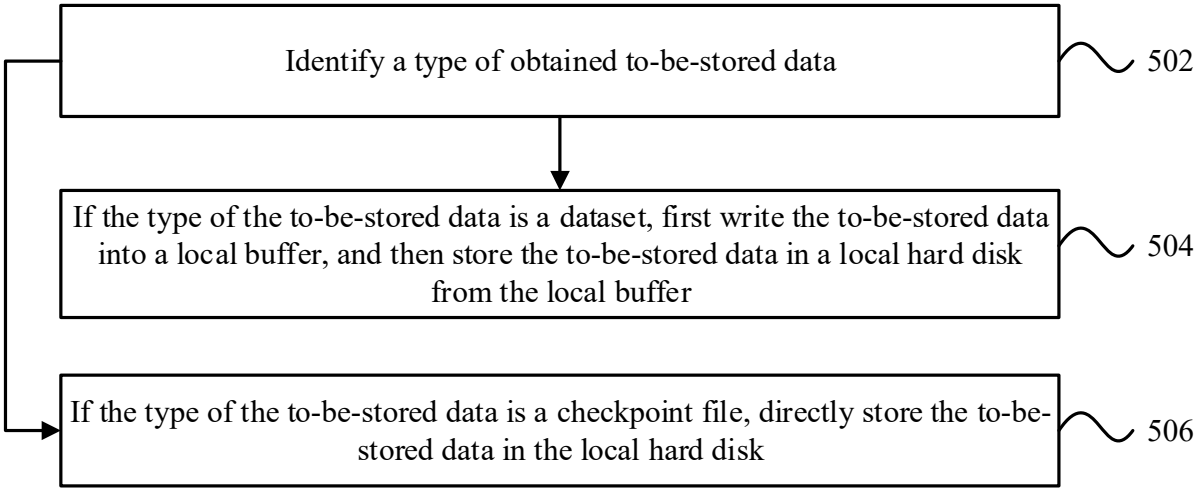

FIG. 5

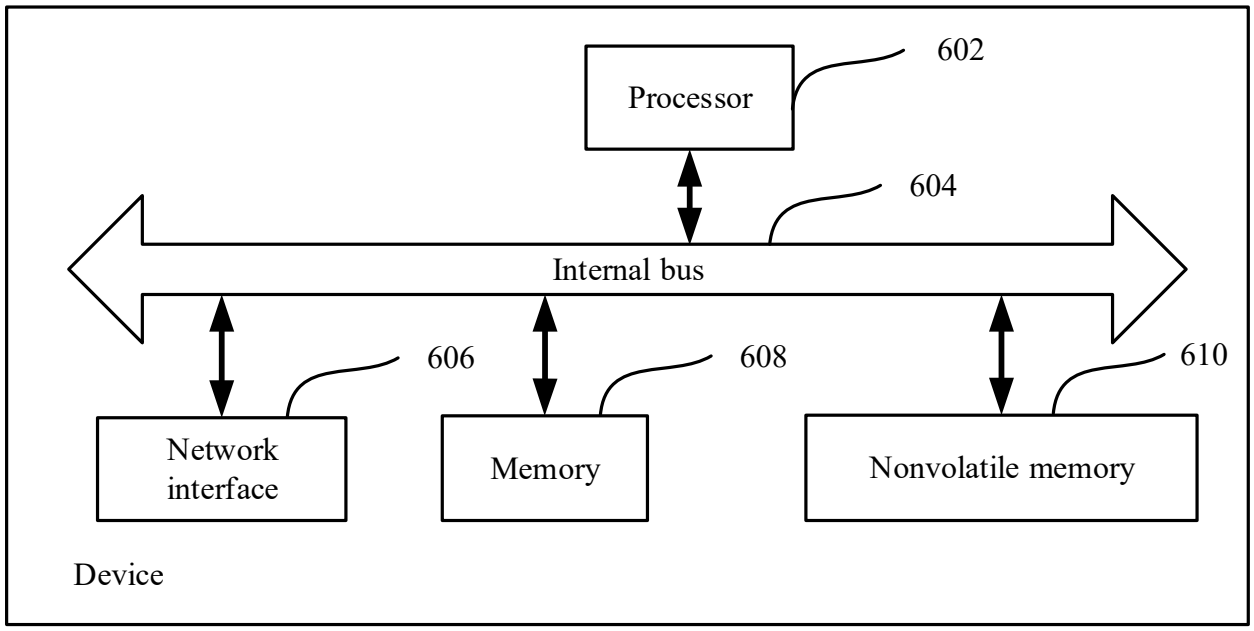
Processor
602
604
Internal bus
606
608
610
Network interface
Memory
Nonvolatile memory
Device

FIG. 6

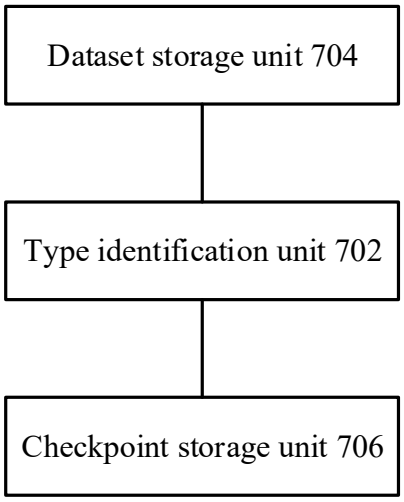
Dataset storage unit 704
Type identification unit 702
Checkpoint storage unit 706

FIG. 7