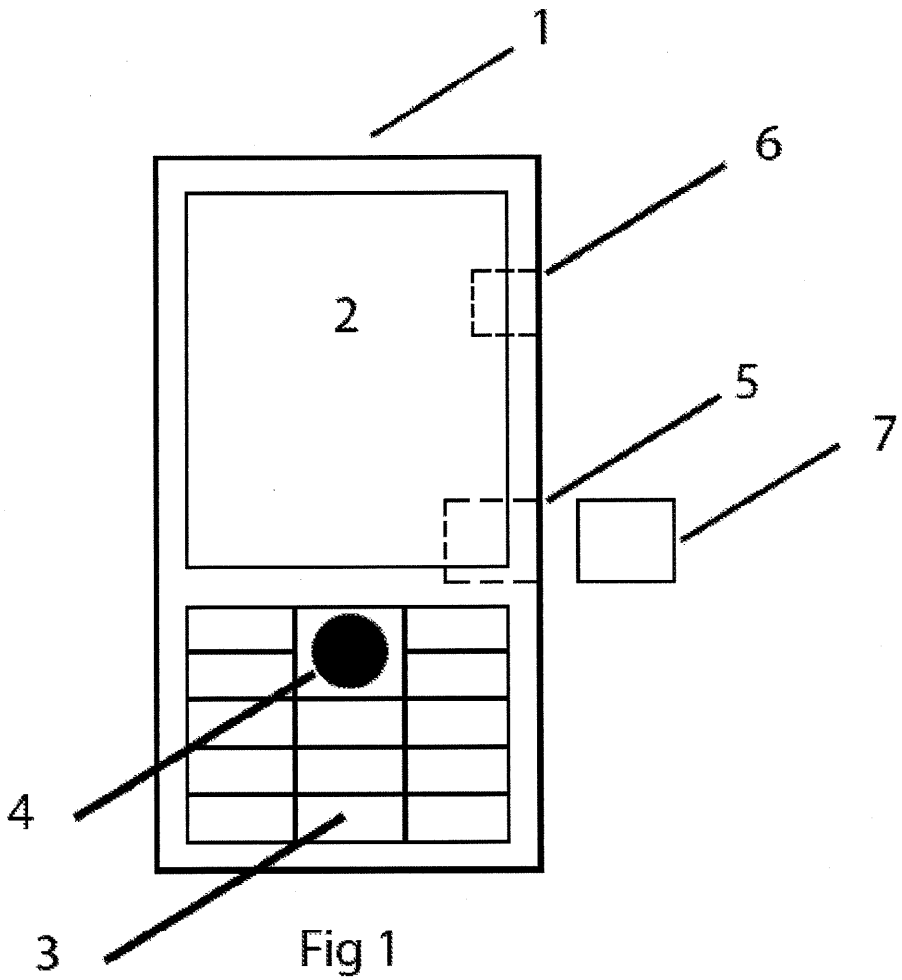

Fig 1

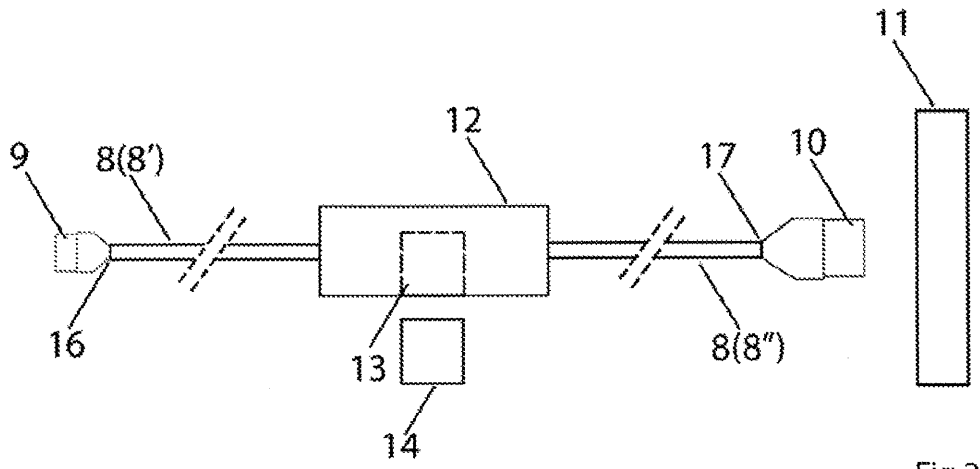

Fig 2

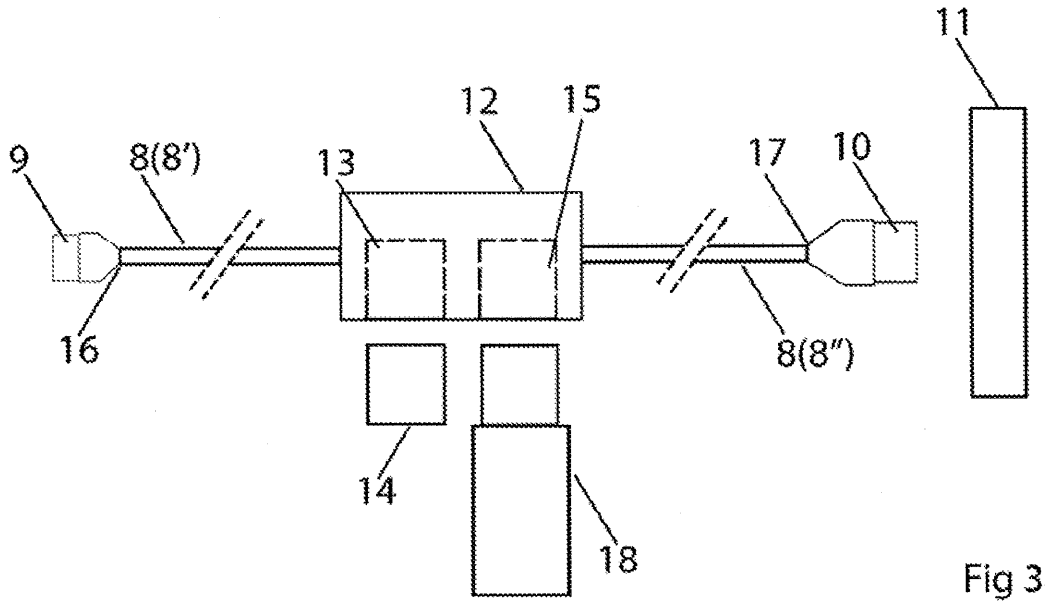

Fig 3