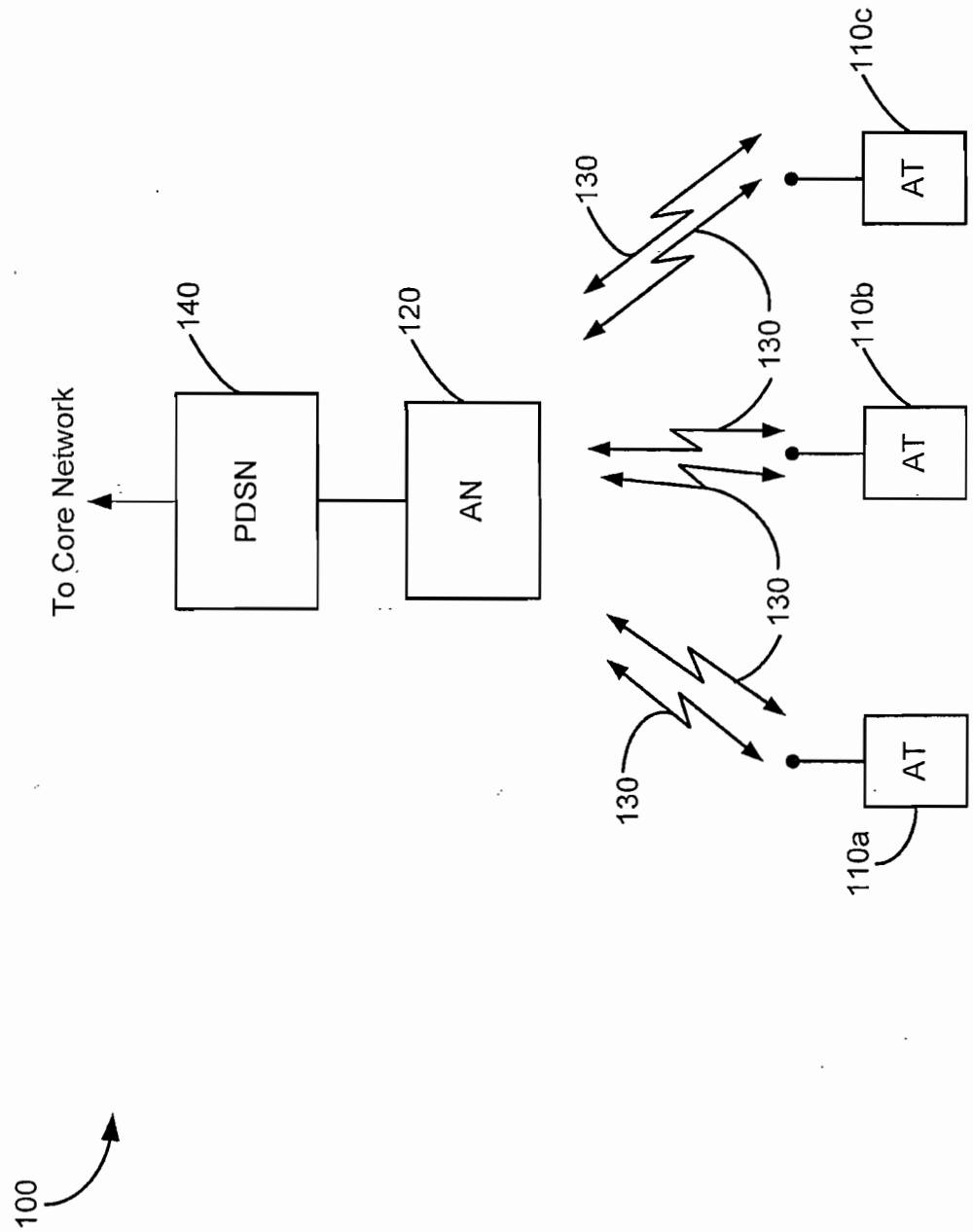
100
To Core Network
140
PDSN
120
AN
130
130
130
130
110a
AT
110b
AT
110c
AT

FIG. 1

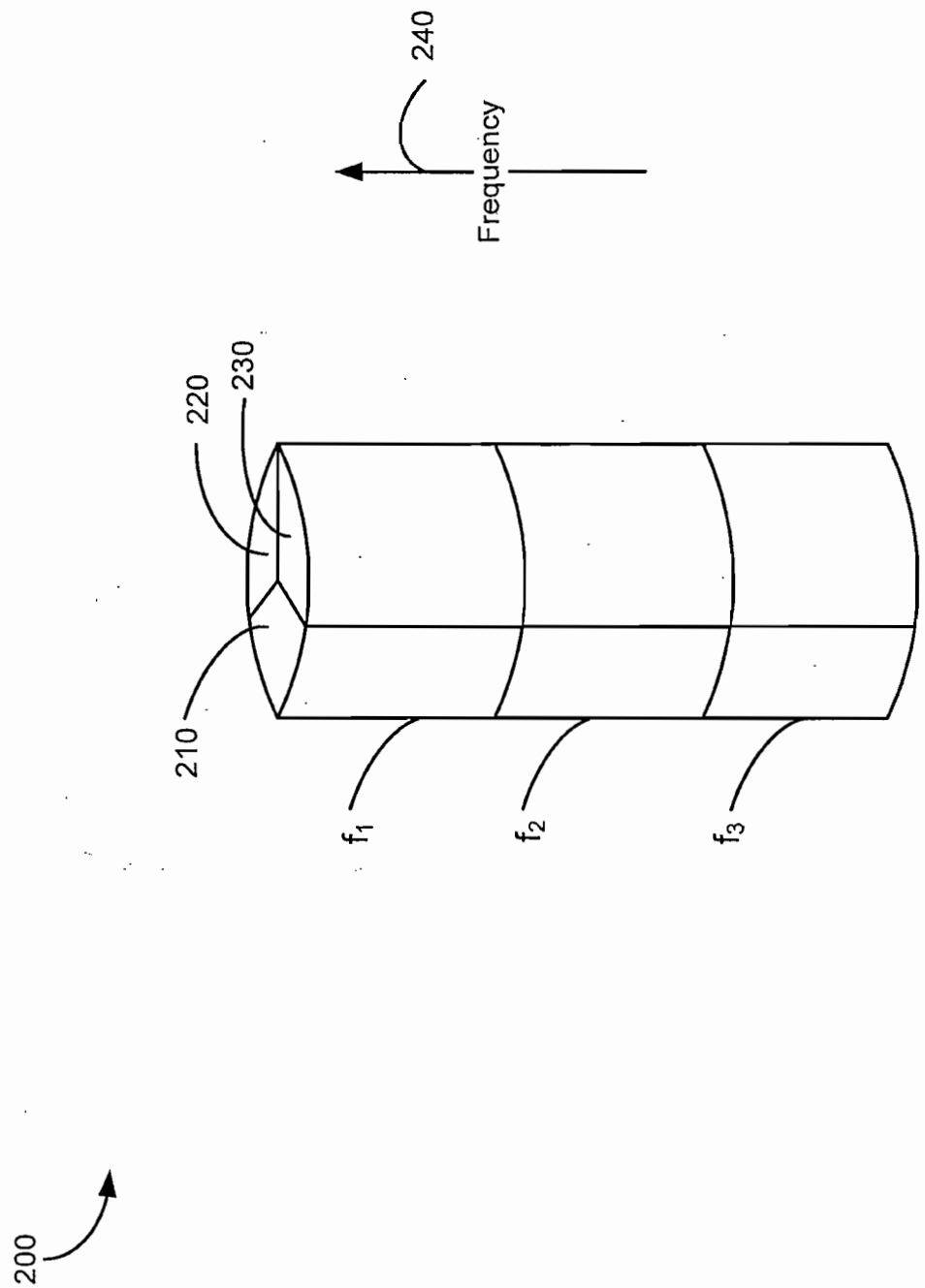

FIG. 2

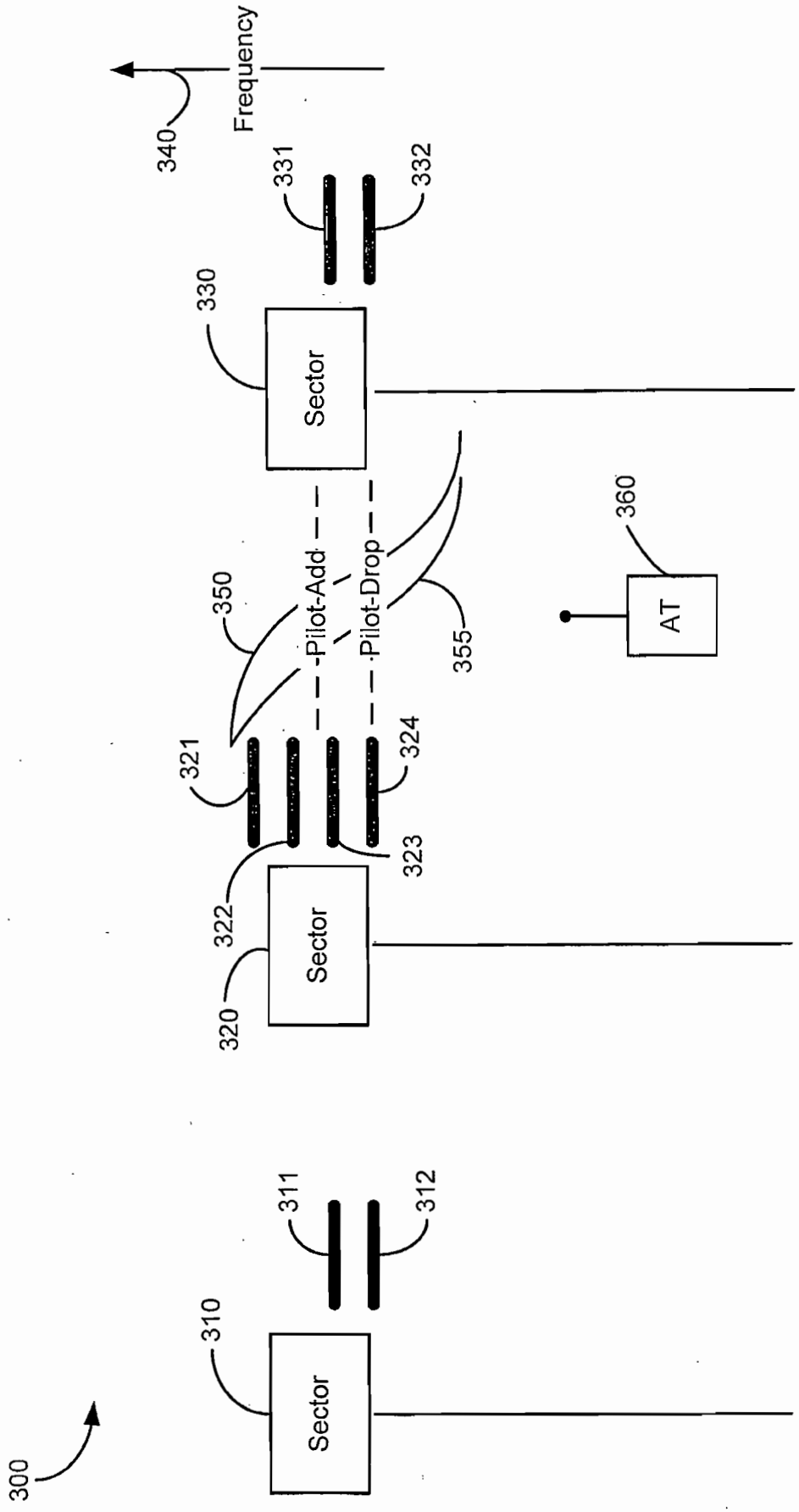
300
Sector
310
311
312
Sector
320
322
321
323
324
Pilot-Add
Pilot-Drop
350
355
AT
360
Sector
330
331
332
340
Frequency

FIG. 3

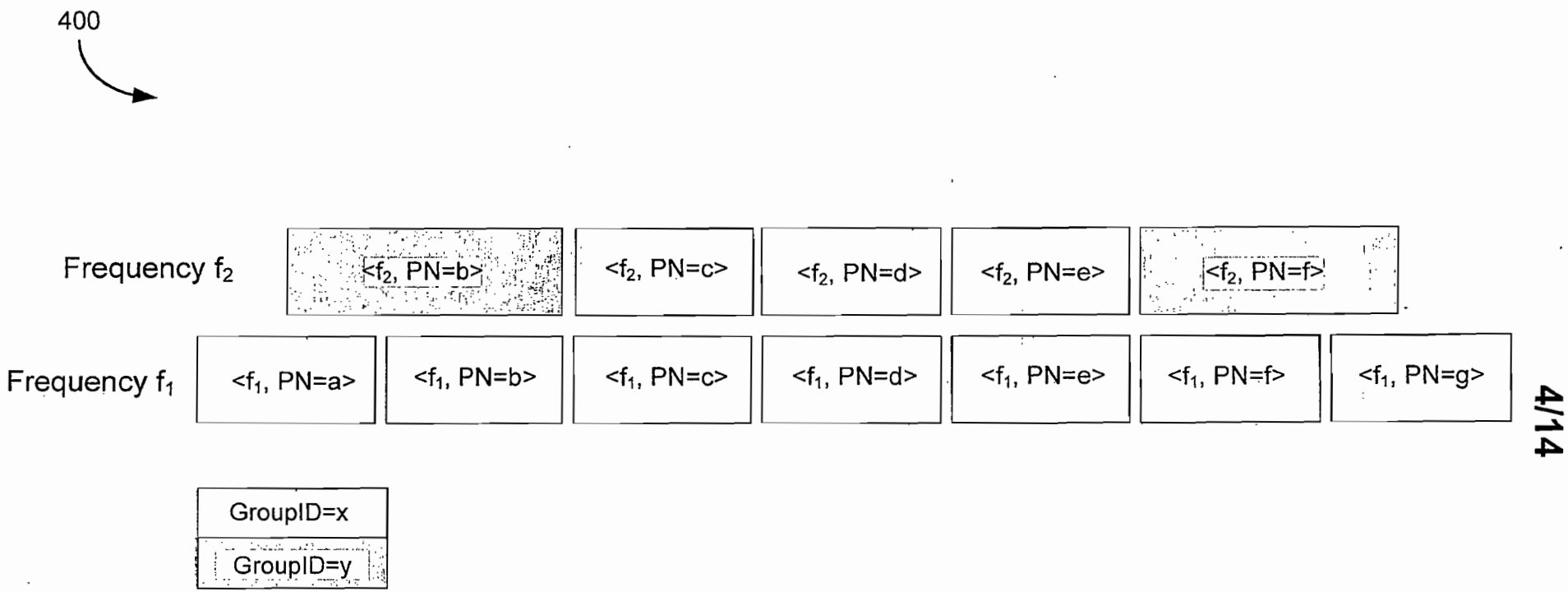
400
Frequency f_2
<f_2, PN=b>
<f_2, PN=c>
<f_2, PN=d>
<f_2, PN=e>
<f_2, PN=f>
Frequency f_1
<f_1, PN=a>
<f_1, PN=b>
<f_1, PN=c>
<f_1, PN=d>
<f_1, PN=e>
<f_1, PN=f>
<f_1, PN=g>
GroupID=x
GroupID=y

FIG. 4

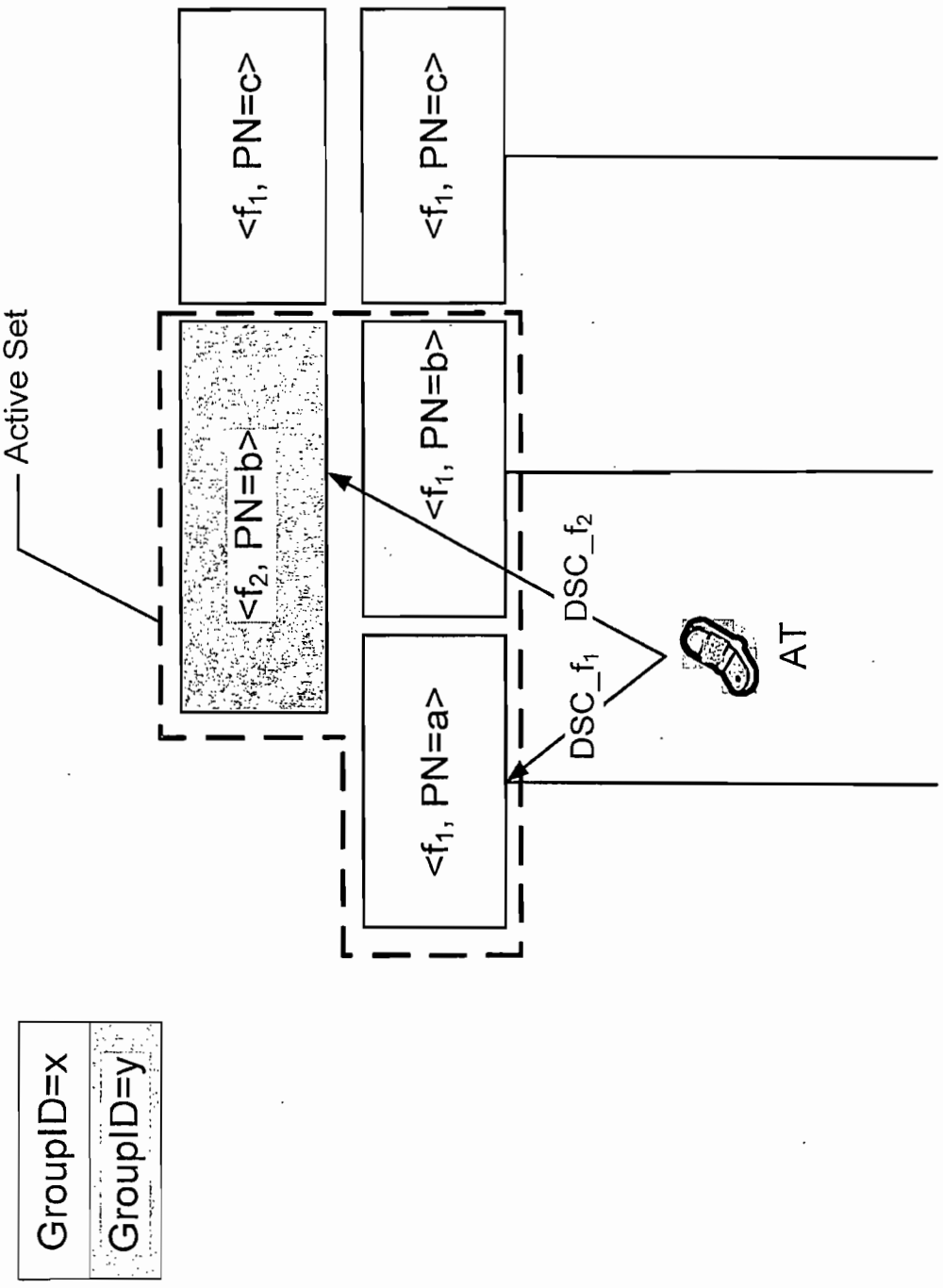
GroupID=x
GroupID=y
Active Set
<f1, PN=c>
<f2, PN=b>
<f1, PN=c>
<f1, PN=b>
<f1, PN=a>
DSC_f2
DSC_f1
AT

FIG. 5

FIG. 6A

610

Active Set

"PN offsetIGroup ID"	Frequency
x	f_1
x	f_2
y	f_1
y	f_2

Candidate Set 630

"PN offsetIGroup ID"	Frequency
z	f_2

FIG. 6B

610

Active Set

"PN offsetIGroup ID"	Frequency
x	f_1
x	f_2
y	f_1
y	f_2
z	f_1

Candidate Set 620

"PN offsetIGroup ID"	Frequency

FIG. 6C

610

Active Set

"PN offsetIGroup ID"	Frequency
x	f_1
y	f_1
y	f_2

Candidate Set 620

"PN offsetIGroup ID"	Frequency
z	f_2

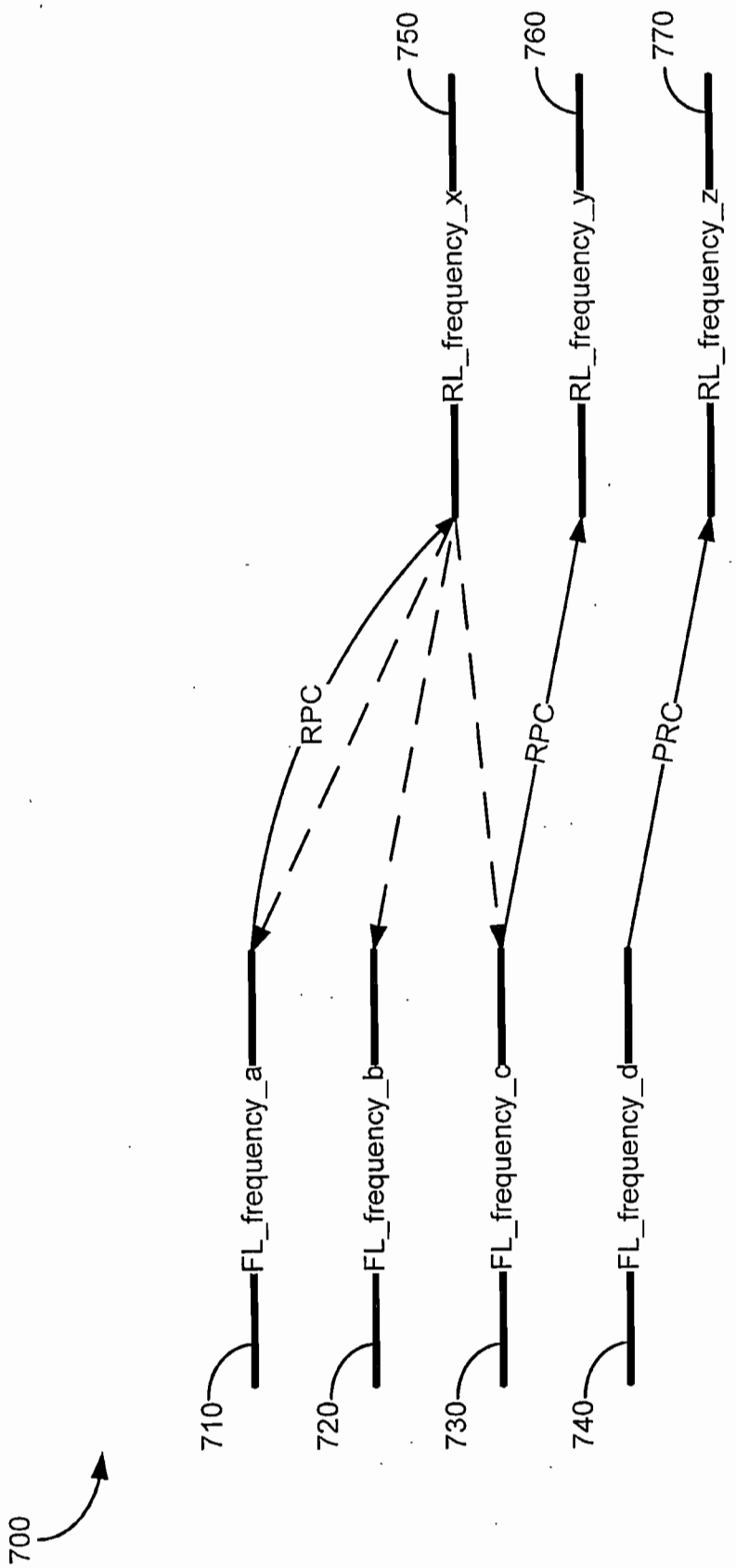
700
710
720
730
740
750
760
770
FL_frequency_a
FL_frequency_b
FL_frequency_c
FL_frequency_d
RL_frequency_x
RL_frequency_y
RL_frequency_z
RPC
RPC
RPC

FIG. 7

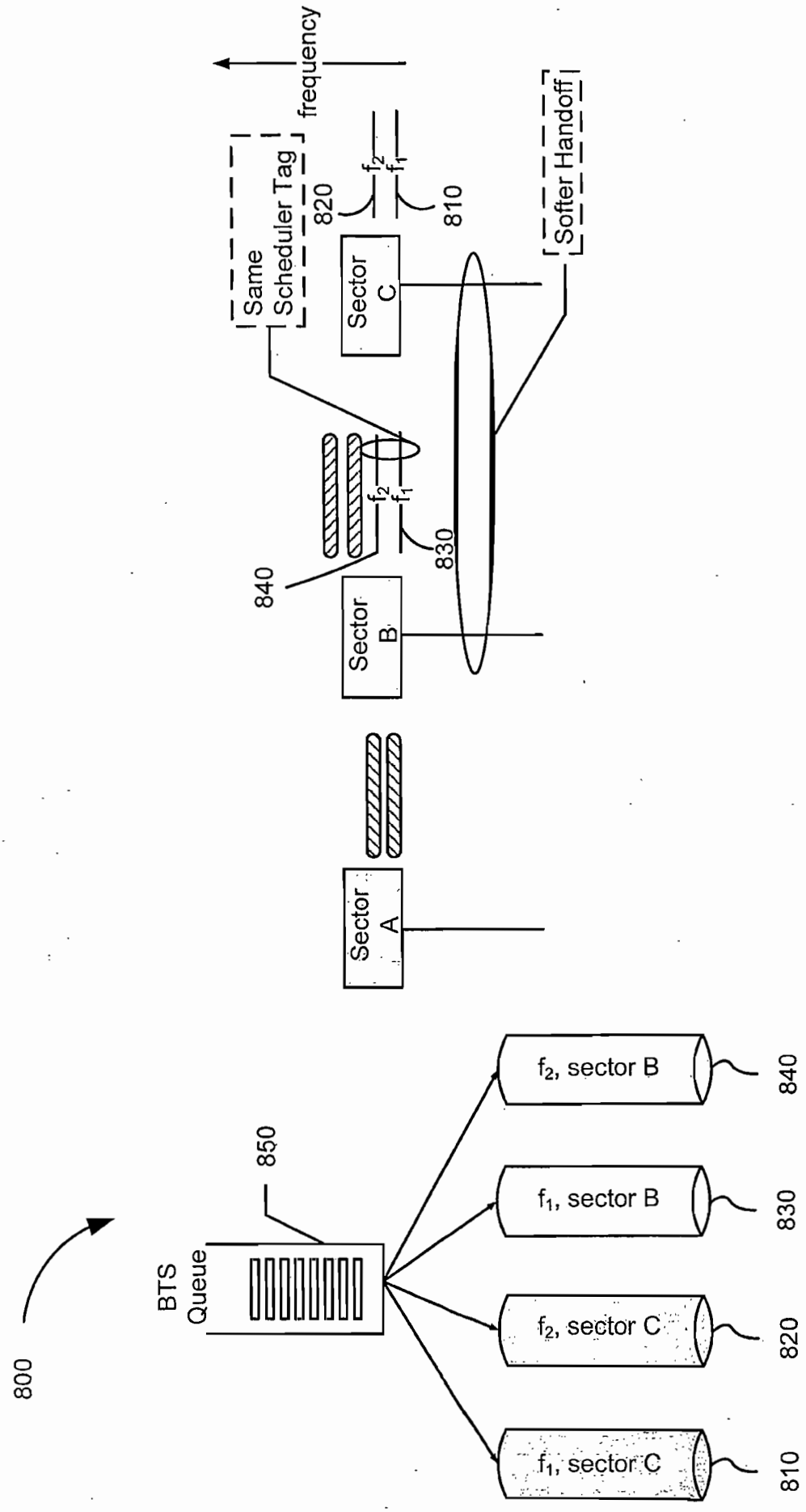
800
BTS Queue
850
f_2, sector B
840
f_1, sector B
830
f_2, sector C
820
f_1, sector C
810
Sector A
Sector B
Sector C
f_2
f_1
840
830
820
810
Same Scheduler Tag
Softer Handoff
frequency

FIG. 8

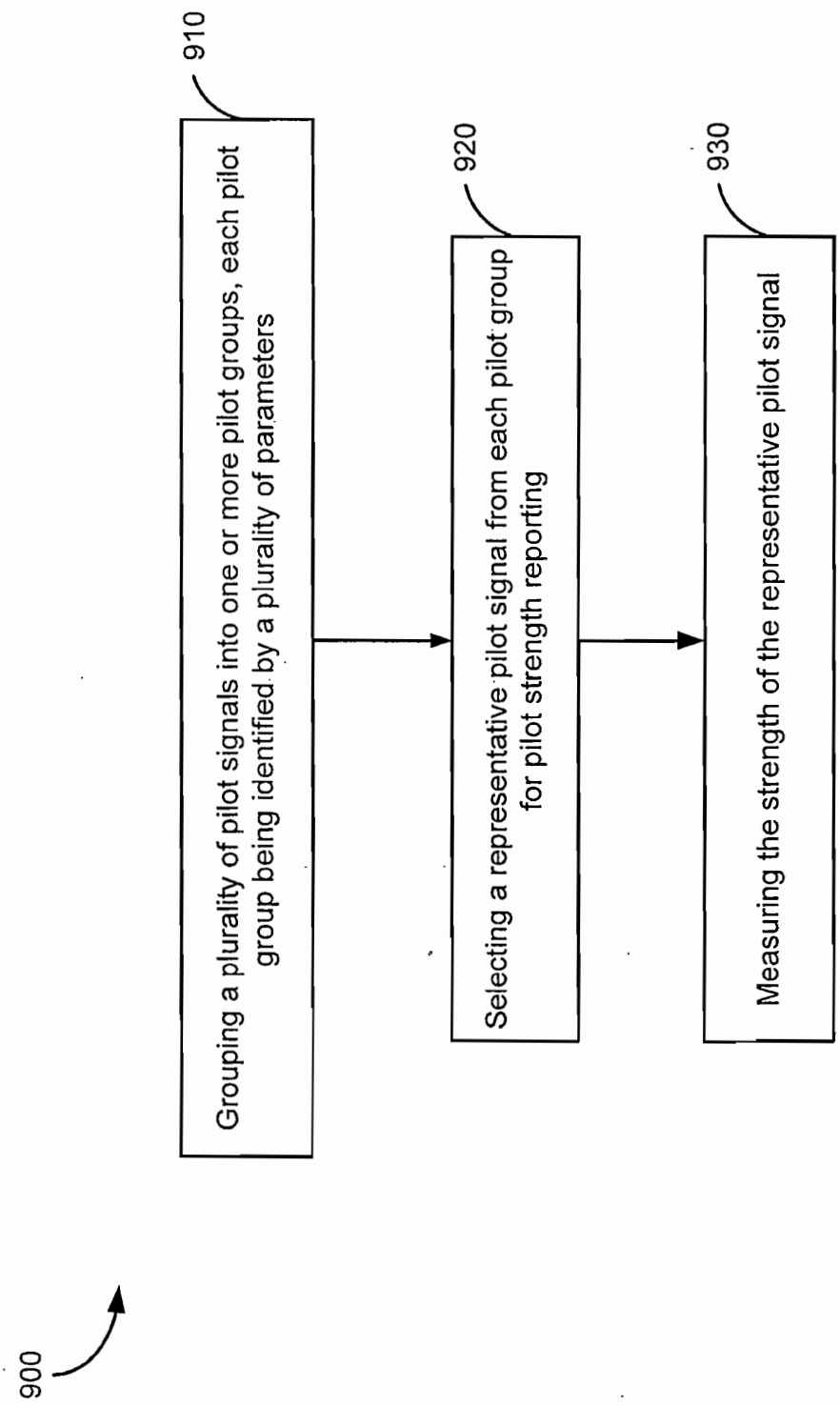
900
910
Grouping a plurality of pilot signals into one or more pilot groups, each pilot group being identified by a plurality of parameters
920
Selecting a representative pilot signal from each pilot group for pilot strength reporting
930
Measuring the strength of the representative pilot signal

FIG. 9

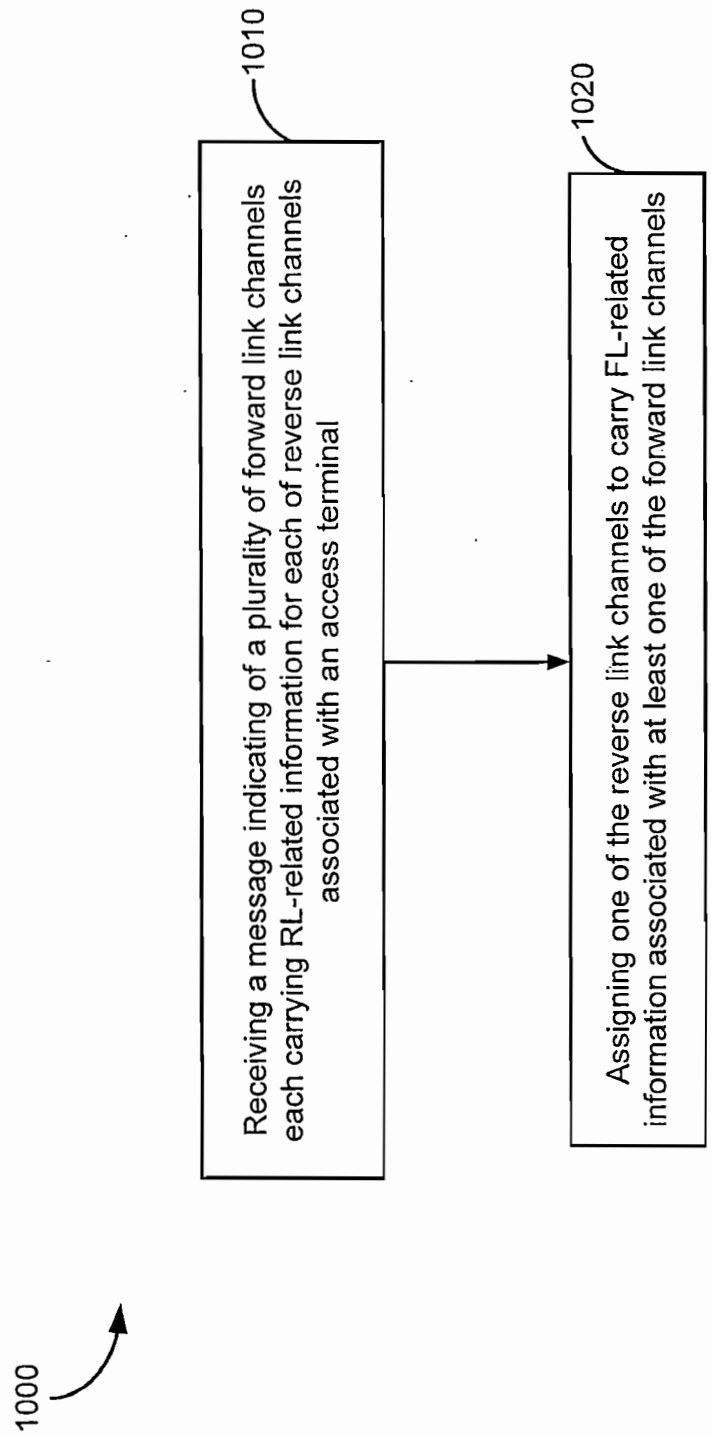
1000
1010
Receiving a message indicating of a plurality of forward link channels each carrying RL-related information for each of reverse link channels associated with an access terminal
1020
Assigning one of the reverse link channels to carry FL-related information associated with at least one of the forward link channels

FIG. 10

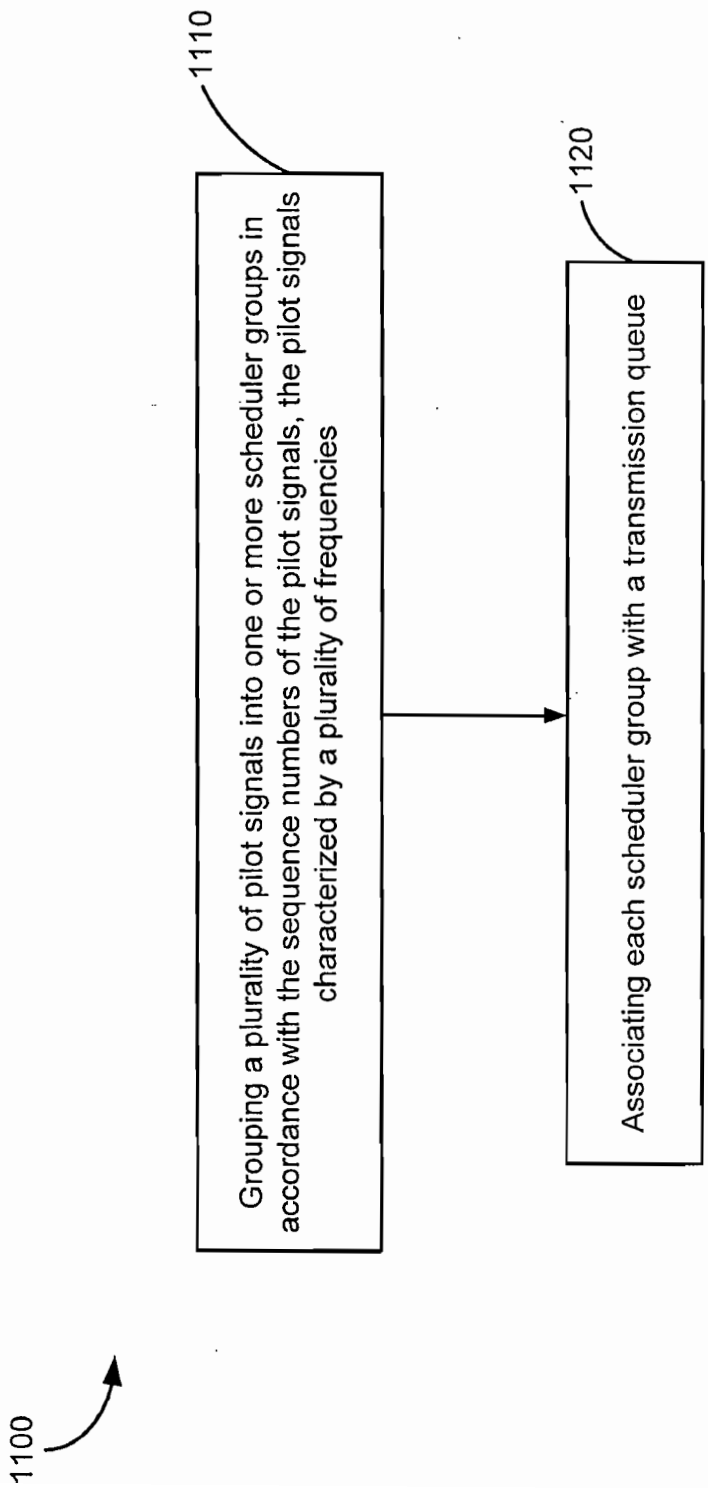
1100
1110
Grouping a plurality of pilot signals into one or more scheduler groups in accordance with the sequence numbers of the pilot signals, the pilot signals characterized by a plurality of frequencies
1120
Associating each scheduler group with a transmission queue

FIG. 11

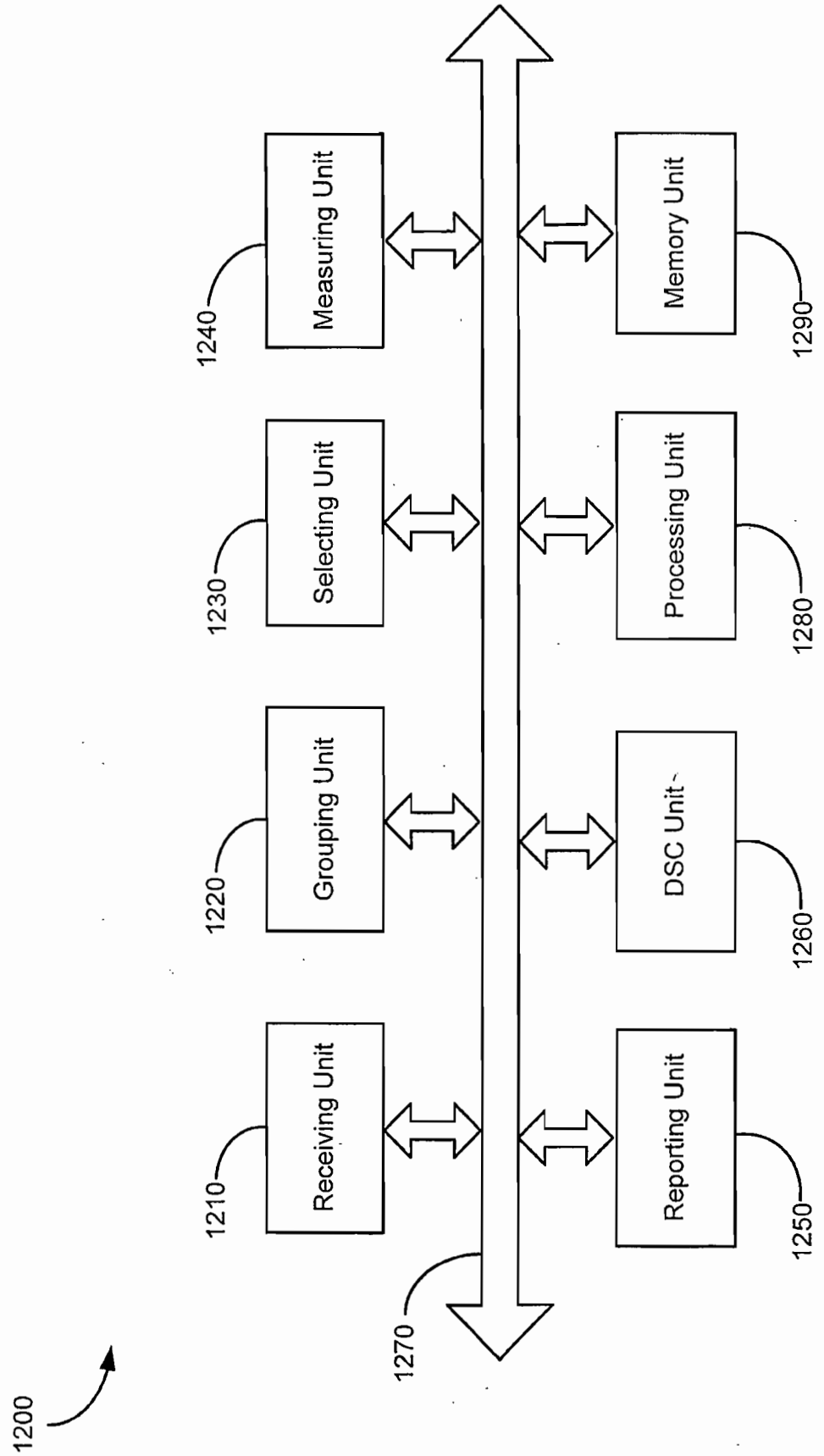
1200
1270
1210
Receiving Unit
1220
Grouping Unit
1230
Selecting Unit
1240
Measuring Unit
1250
Reporting Unit
1260
DSC Unit
1280
Processing Unit
1290
Memory Unit

FIG. 12

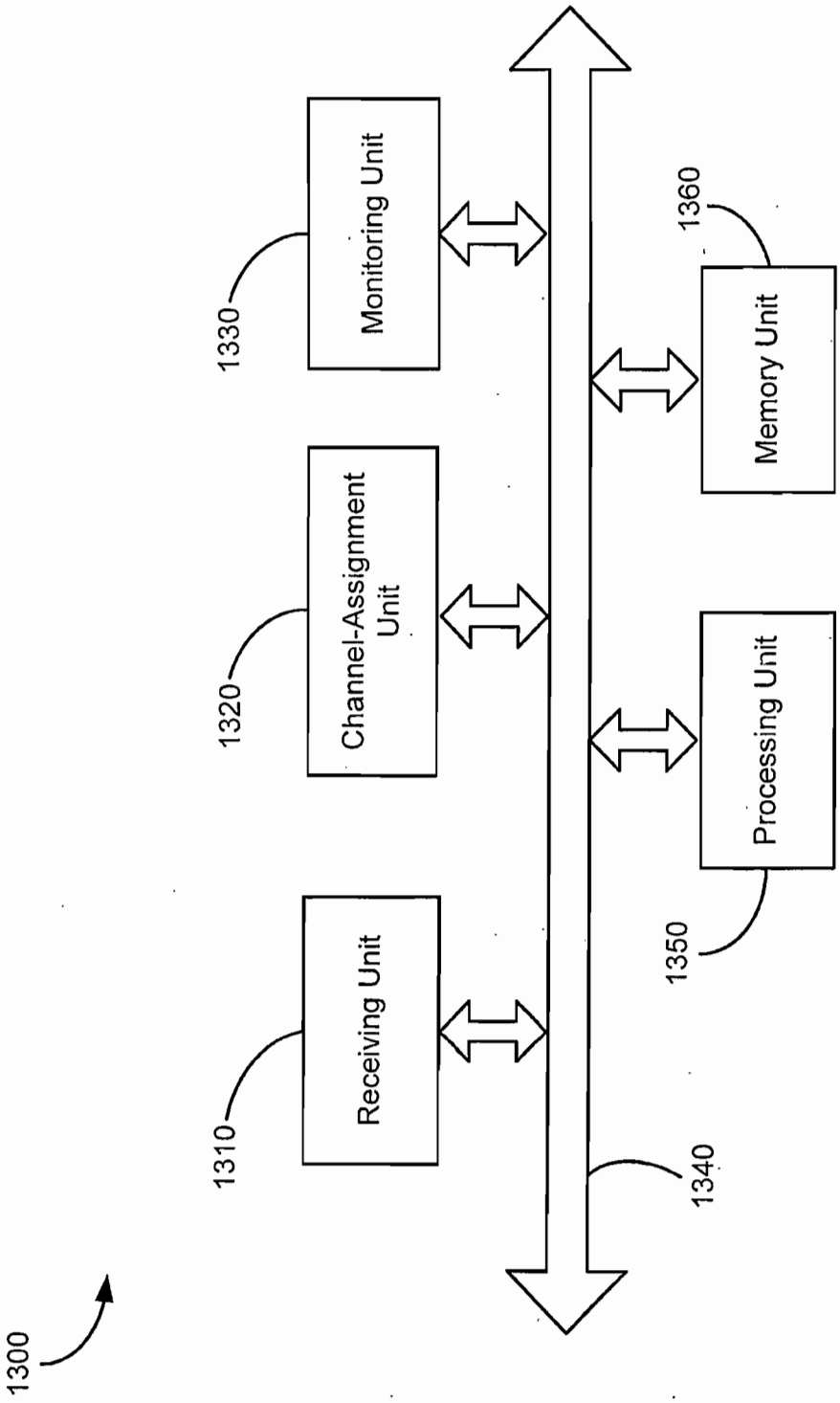
1300
1310
Receiving Unit
1320
Channel-Assignment Unit
1330
Monitoring Unit
1340
1350
Processing Unit
1360
Memory Unit

FIG. 13

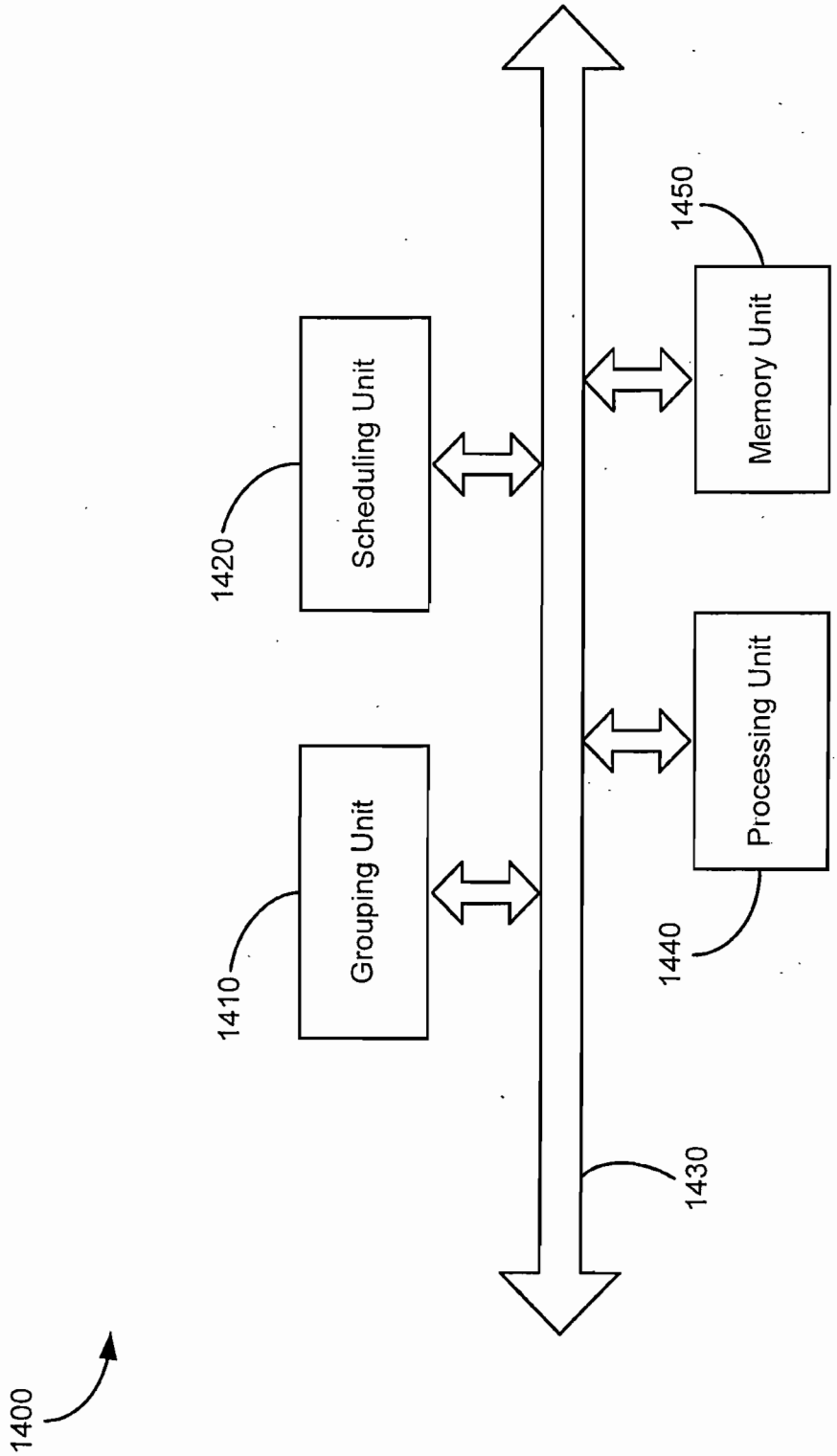
1400
1410
Grouping Unit
1420
Scheduling Unit
1430
1440
Processing Unit
1450
Memory Unit

FIG. 14