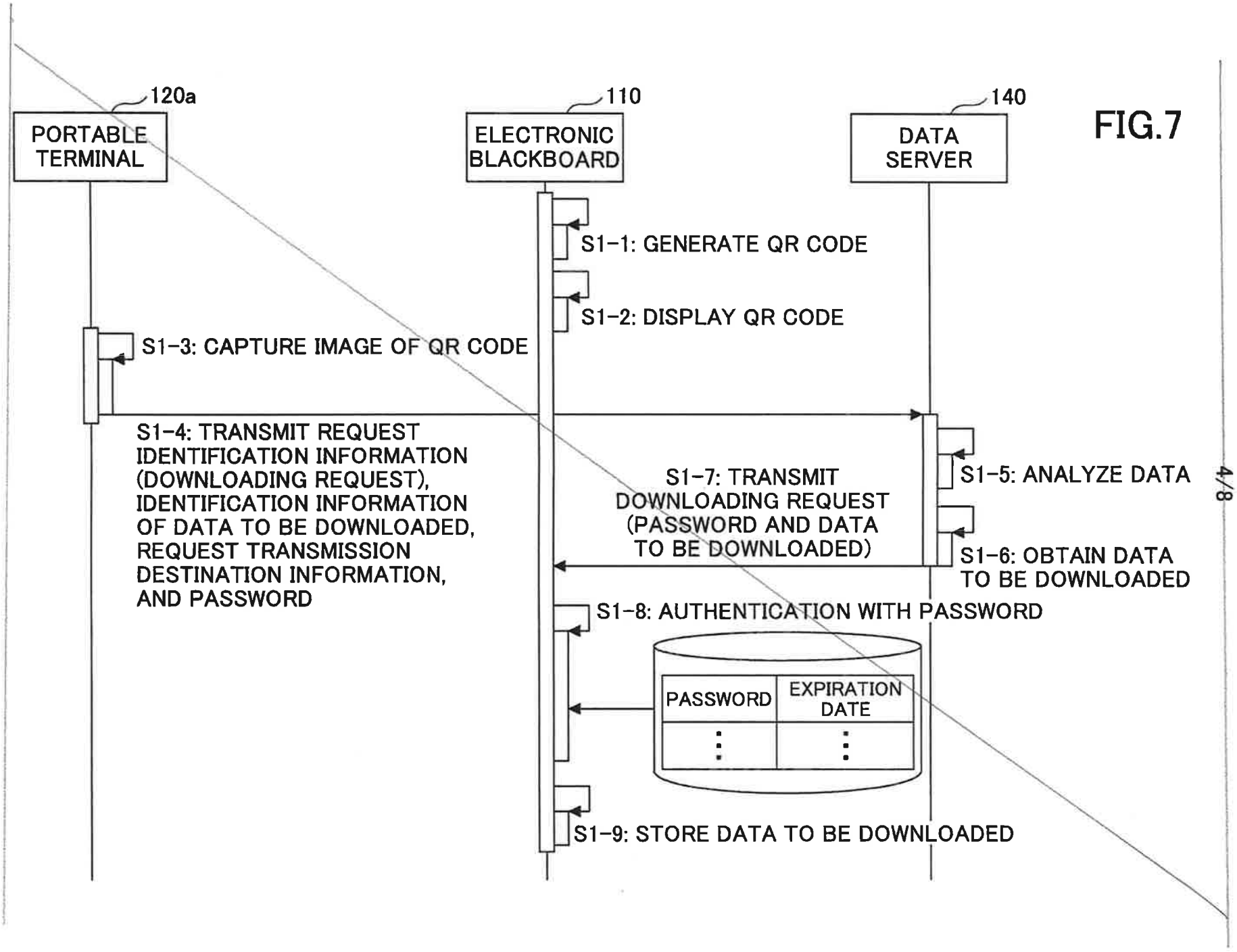
120a
PORTABLE TERMINAL
110
ELECTRONIC BLACKBOARD
140
DATA SERVER
S1-1: GENERATE QR CODE
S1-2: DISPLAY QR CODE
S1-3: CAPTURE IMAGE OF QR CODE
S1-4: TRANSMIT REQUEST IDENTIFICATION INFORMATION (DOWNLOADING REQUEST), IDENTIFICATION INFORMATION OF DATA TO BE DOWNLOADED, REQUEST TRANSMISSION DESTINATION INFORMATION, AND PASSWORD
S1-5: ANALYZE DATA
S1-6: OBTAIN DATA TO BE DOWNLOADED
S1-7: TRANSMIT DOWNLOADING REQUEST (PASSWORD AND DATA TO BE DOWNLOADED)
S1-8: AUTHENTICATION WITH PASSWORD
PASSWORD
EXPIRATION DATE
S1-9: STORE DATA TO BE DOWNLOADED

FIG.7

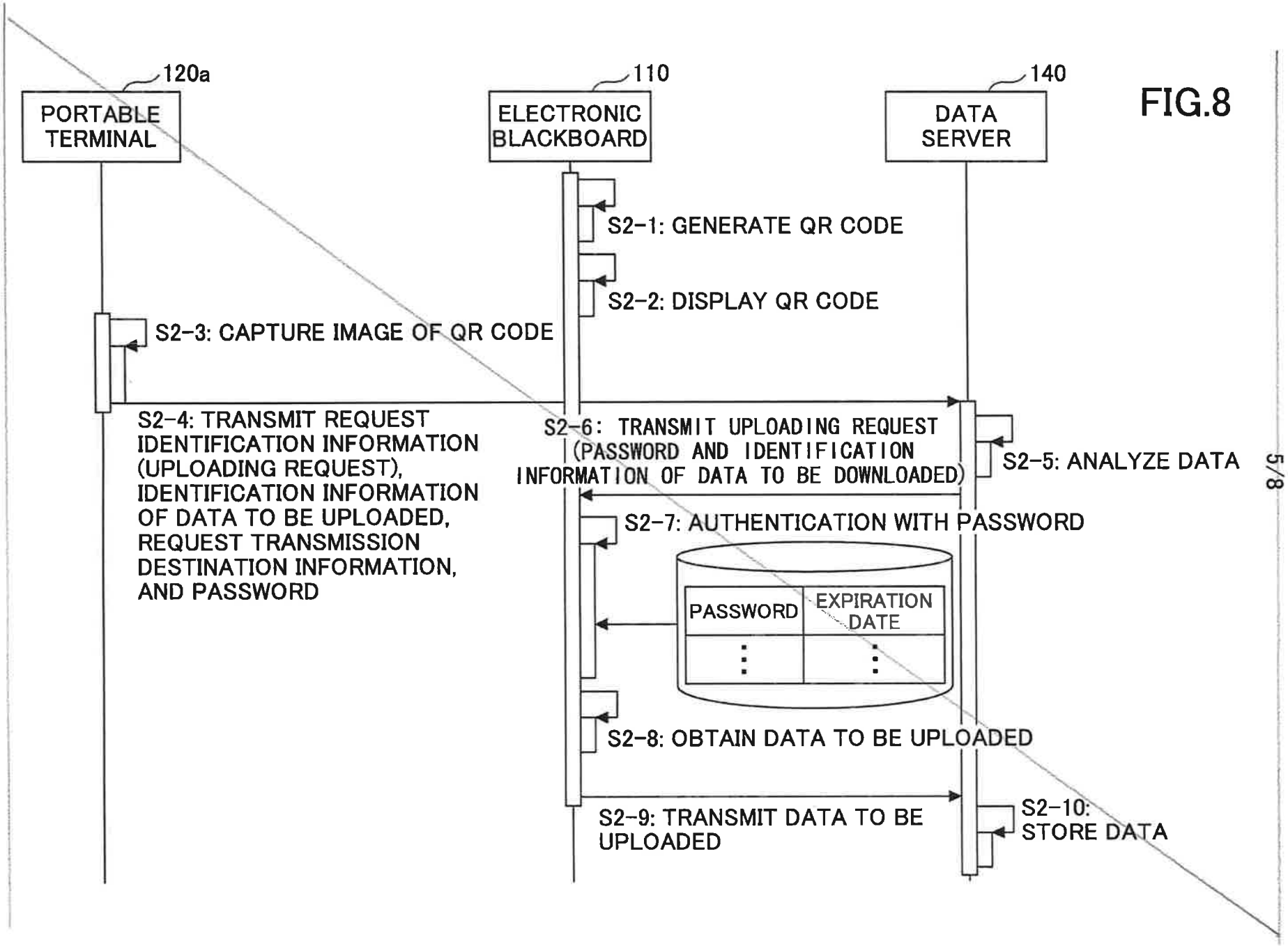
120a
PORTABLE TERMINAL
110
ELECTRONIC BLACKBOARD
140
DATA SERVER
S2-1: GENERATE QR CODE
S2-2: DISPLAY QR CODE
S2-3: CAPTURE IMAGE OF QR CODE
S2-4: TRANSMIT REQUEST IDENTIFICATION INFORMATION (UPLOADING REQUEST), IDENTIFICATION INFORMATION OF DATA TO BE UPLOADED, REQUEST TRANSMISSION DESTINATION INFORMATION, AND PASSWORD
S2-6: TRANSMIT UPLOADING REQUEST (PASSWORD AND IDENTIFICATION INFORMATION OF DATA TO BE DOWNLOADED)
S2-5: ANALYZE DATA
S2-7: AUTHENTICATION WITH PASSWORD
PASSWORD
EXPIRATION DATE
S2-8: OBTAIN DATA TO BE UPLOADED
S2-9: TRANSMIT DATA TO BE UPLOADED
S2-10: STORE DATA

FIG.8

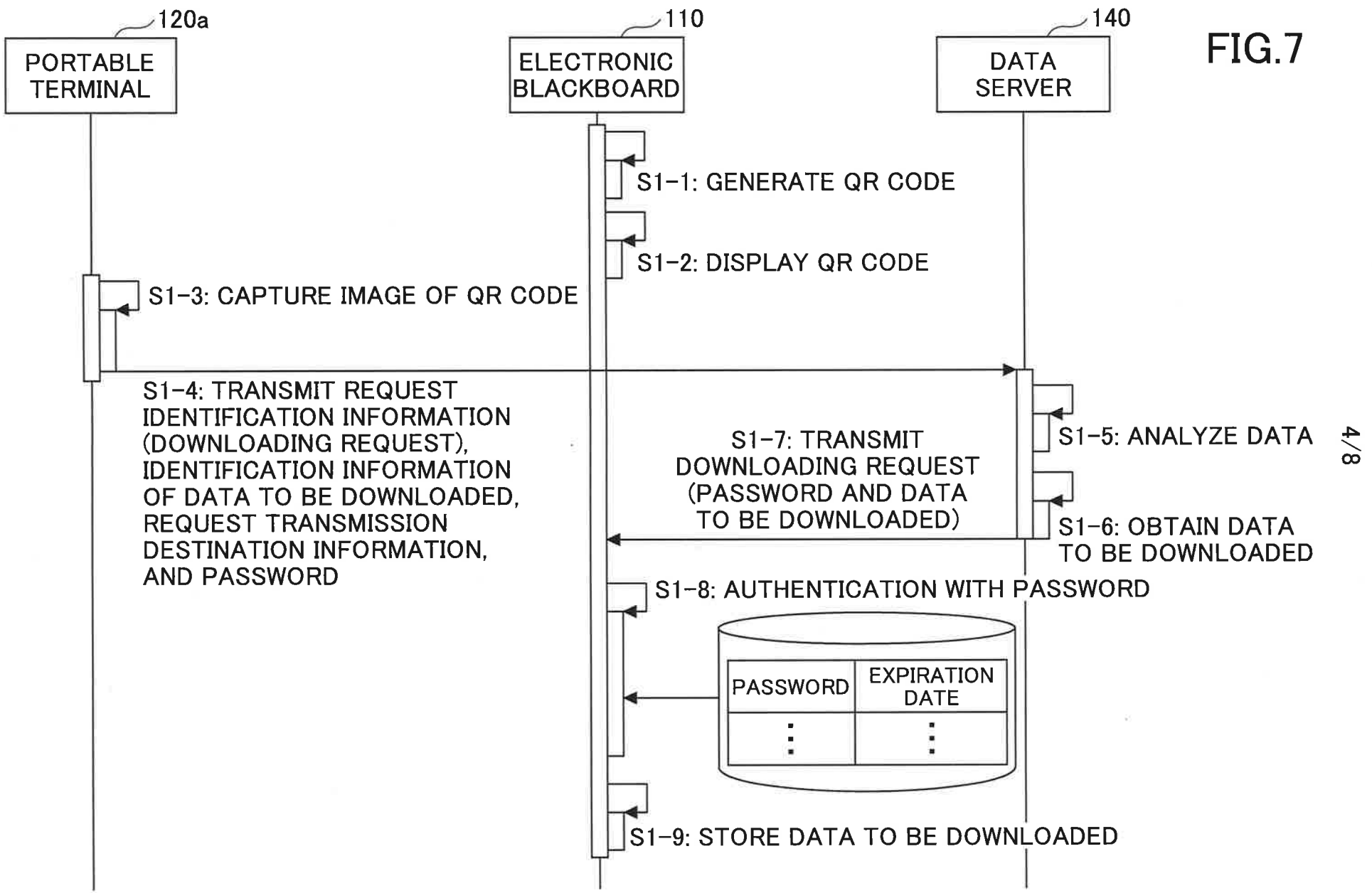
120a
PORTABLE TERMINAL
110
ELECTRONIC BLACKBOARD
140
DATA SERVER
S1-1: GENERATE QR CODE
S1-2: DISPLAY QR CODE
S1-3: CAPTURE IMAGE OF QR CODE
S1-4: TRANSMIT REQUEST IDENTIFICATION INFORMATION (DOWNLOADING REQUEST), IDENTIFICATION INFORMATION OF DATA TO BE DOWNLOADED, REQUEST TRANSMISSION DESTINATION INFORMATION, AND PASSWORD
S1-5: ANALYZE DATA
S1-7: TRANSMIT DOWNLOADING REQUEST (PASSWORD AND DATA TO BE DOWNLOADED)
S1-6: OBTAIN DATA TO BE DOWNLOADED
S1-8: AUTHENTICATION WITH PASSWORD
PASSWORD
EXPIRATION DATE
S1-9: STORE DATA TO BE DOWNLOADED

FIG.7

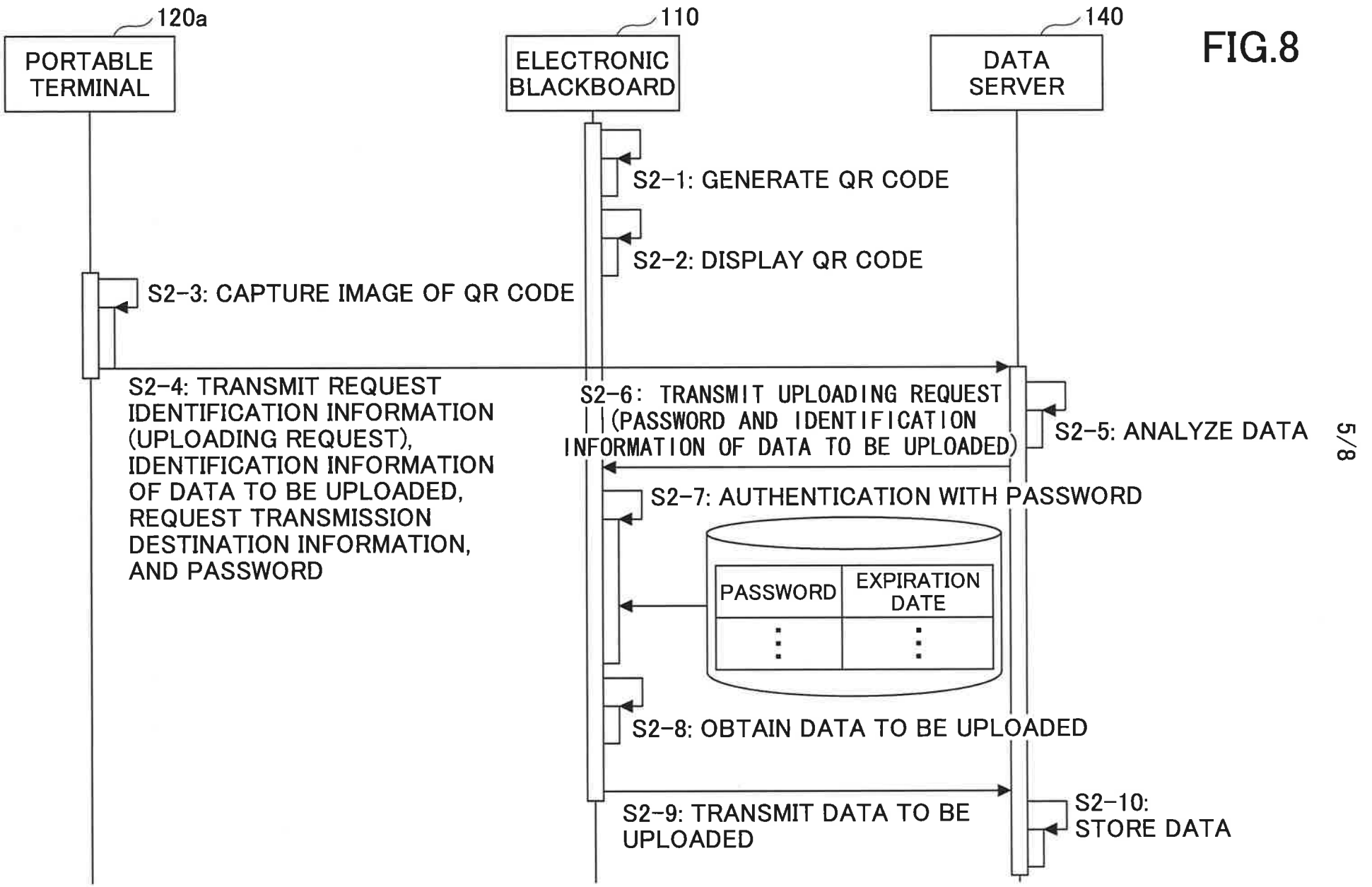
120a
PORTABLE TERMINAL
110
ELECTRONIC BLACKBOARD
140
DATA SERVER
S2-1: GENERATE QR CODE
S2-2: DISPLAY QR CODE
S2-3: CAPTURE IMAGE OF QR CODE
S2-4: TRANSMIT REQUEST IDENTIFICATION INFORMATION (UPLOADING REQUEST), IDENTIFICATION INFORMATION OF DATA TO BE UPLOADED, REQUEST TRANSMISSION DESTINATION INFORMATION, AND PASSWORD
S2-6: TRANSMIT UPLOADING REQUEST (PASSWORD AND IDENTIFICATION INFORMATION OF DATA TO BE UPLOADED)
S2-5: ANALYZE DATA
S2-7: AUTHENTICATION WITH PASSWORD
PASSWORD
EXPIRATION DATE
S2-8: OBTAIN DATA TO BE UPLOADED
S2-9: TRANSMIT DATA TO BE UPLOADED
S2-10: STORE DATA

FIG.8