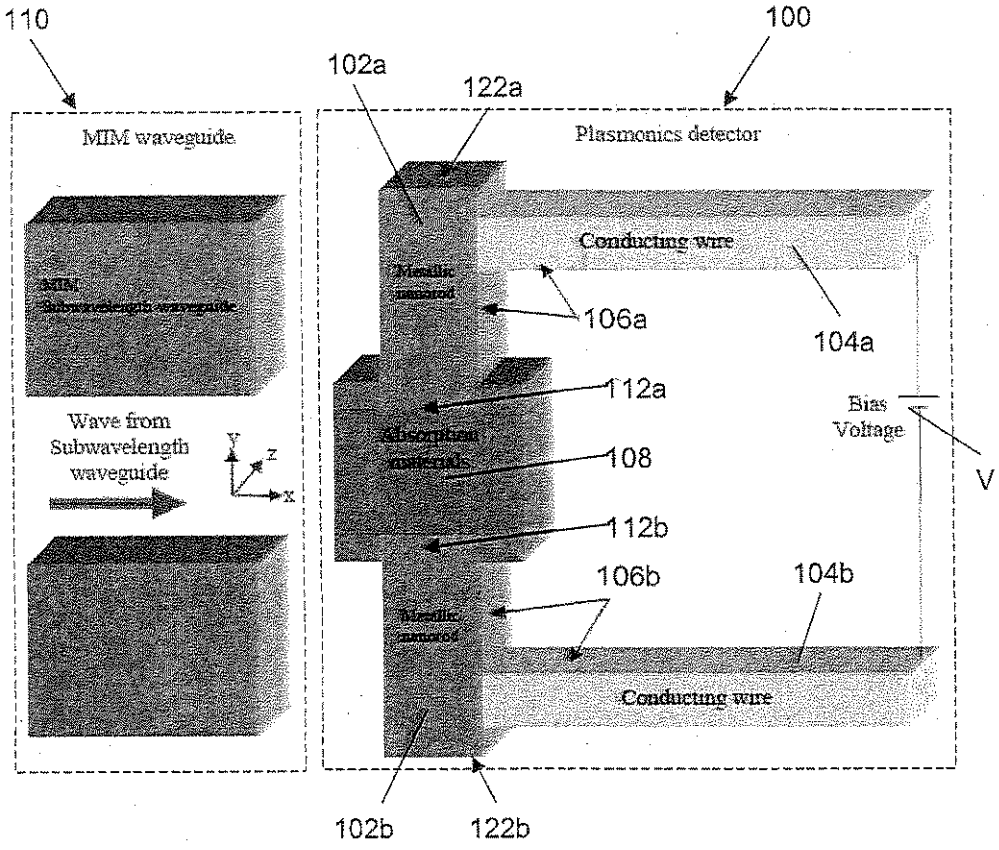
110
100
102a
122a
MIM waveguide
Plasmonics detector
MIM subwavelength waveguide
Metallic nanorod
Conducting wire
106a
104a
112a
Bias Voltage
V
Absorption material
108
Wave from Subwavelength waveguide
112b
106b
104b
Metallic nanorod
Conducting wire
102b
122b

Figure 1

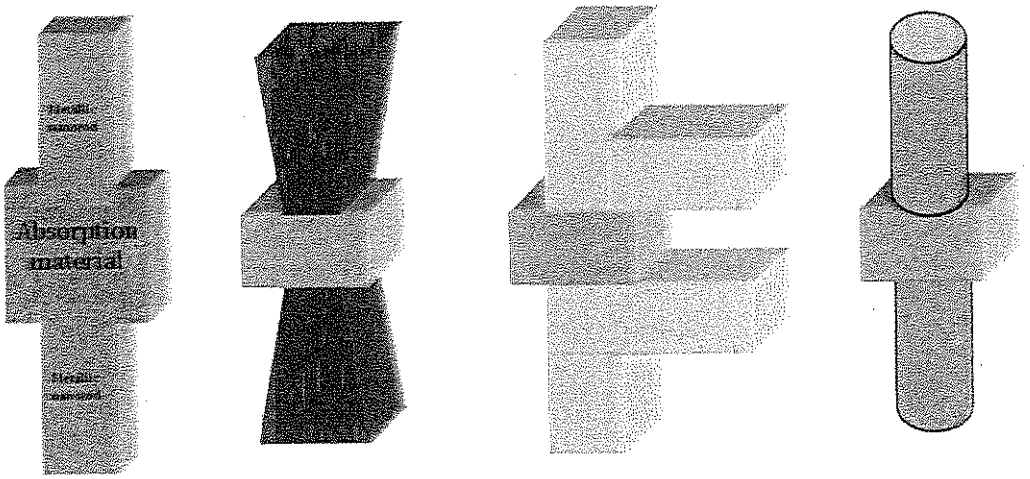

Figure 2

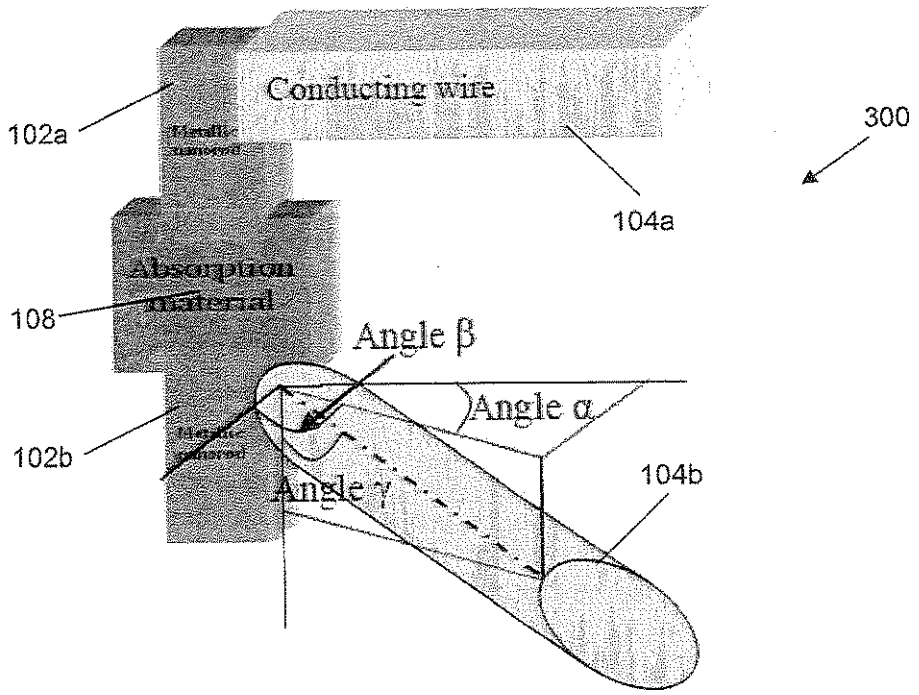

Figure 3

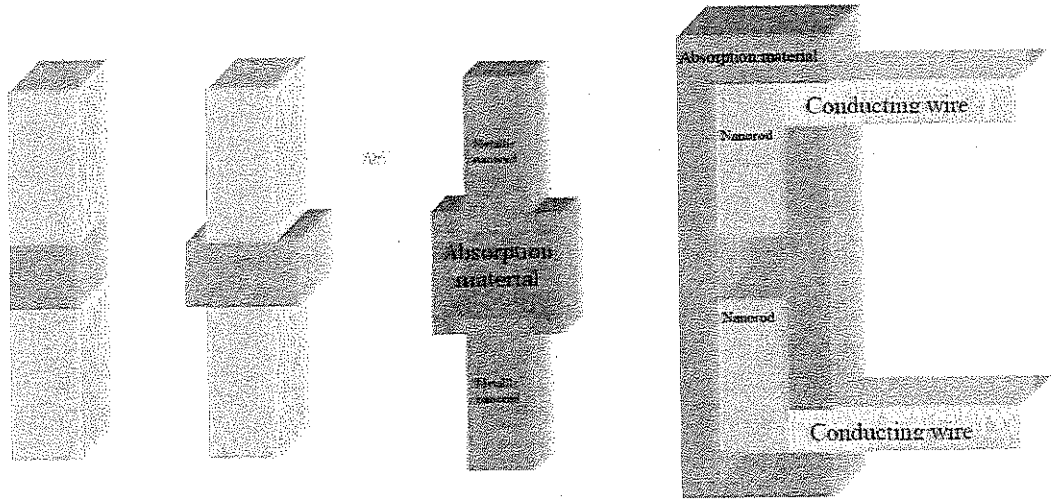

(a) (b) (c) (d)

Figure 4

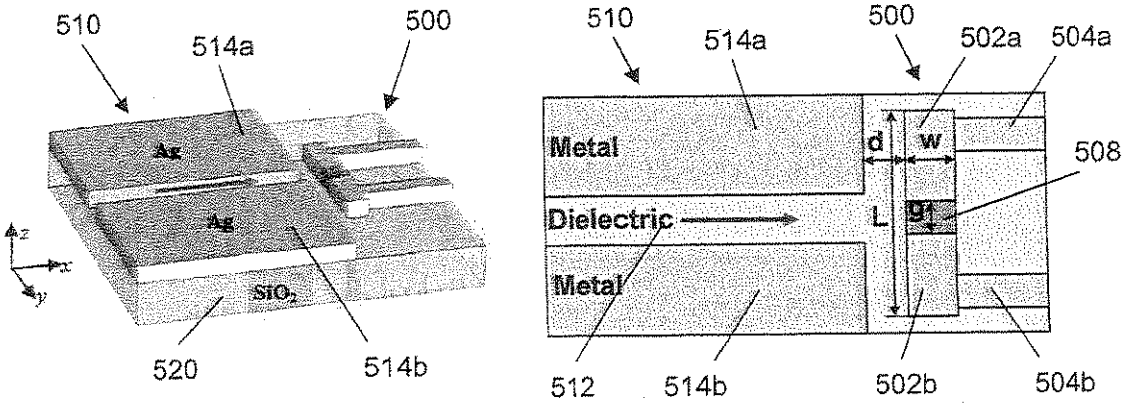

(a) (b)

Figure 5

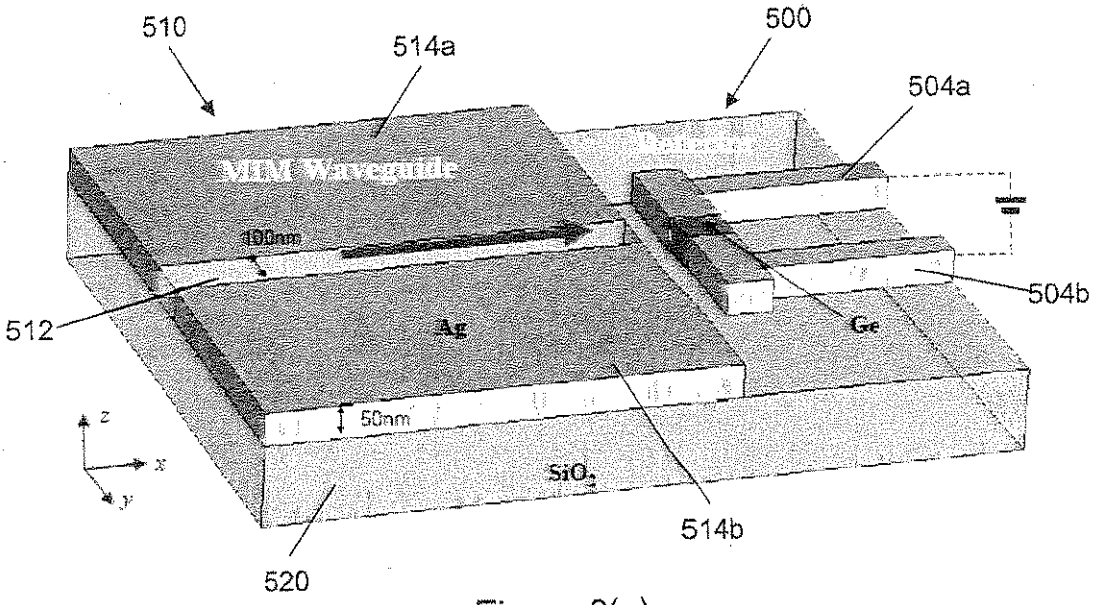

Figure 6(a)

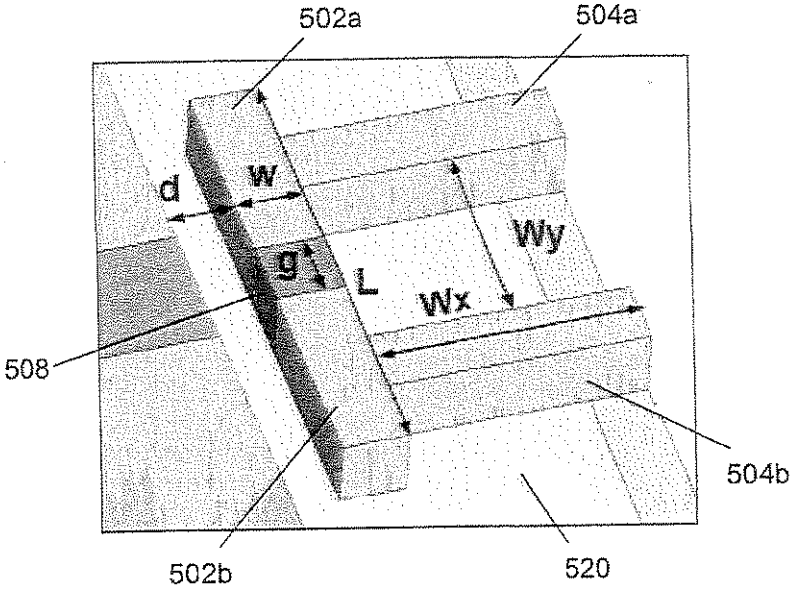

Figure 6(b)

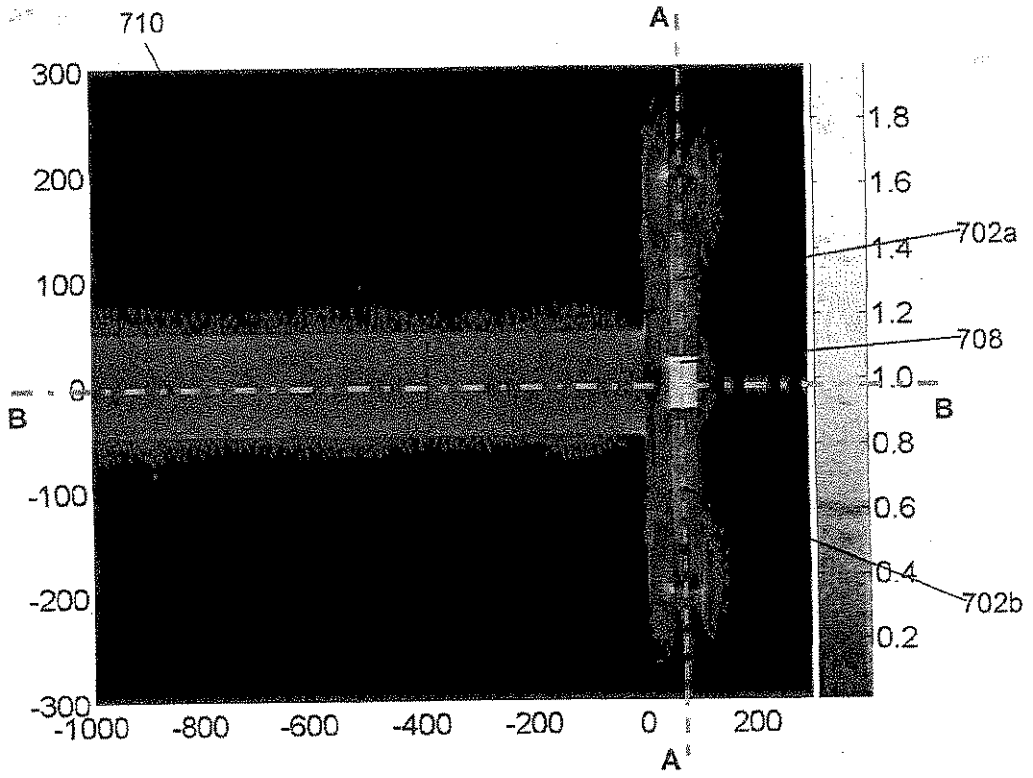

Figure 7(a)

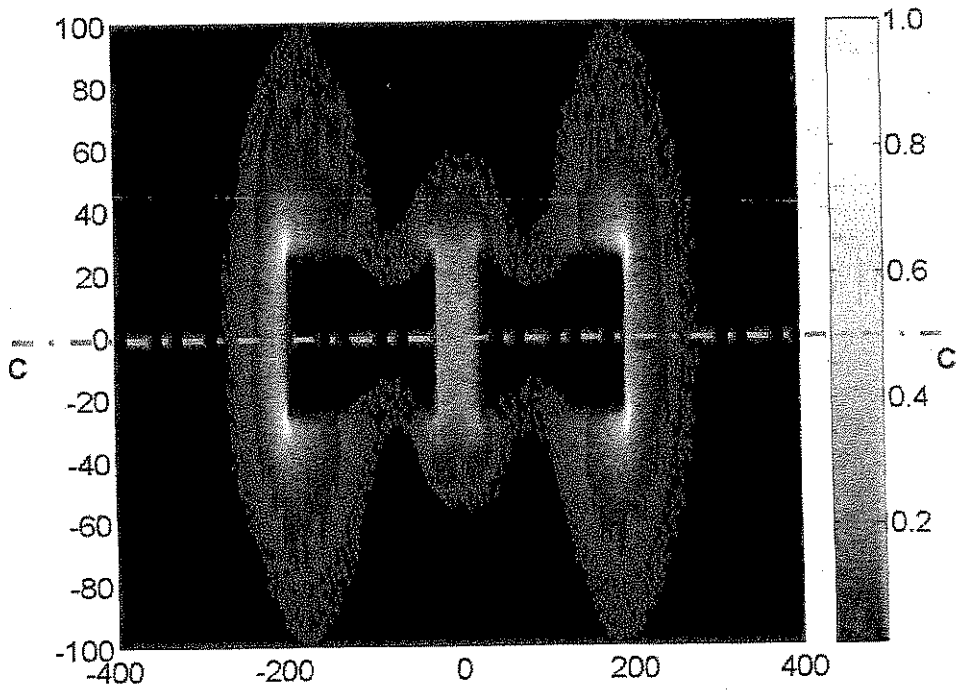

Figure 7(b)

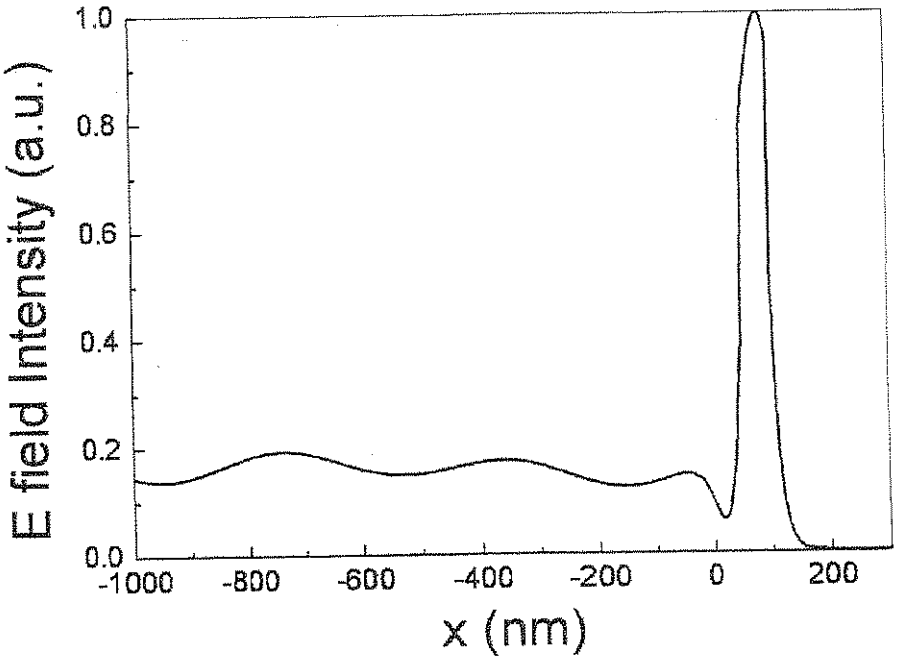

Figure 7(c)

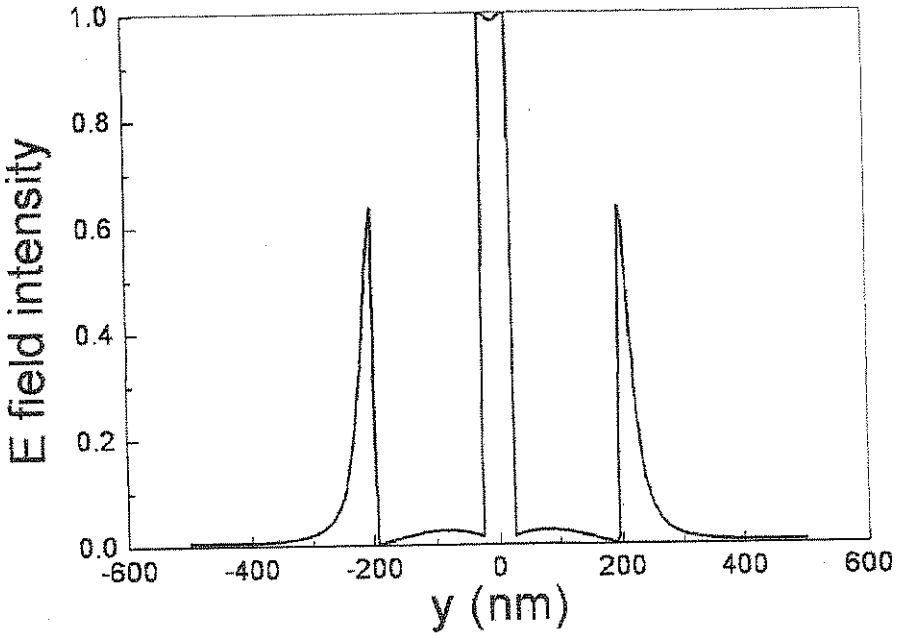

Figure 7(d)

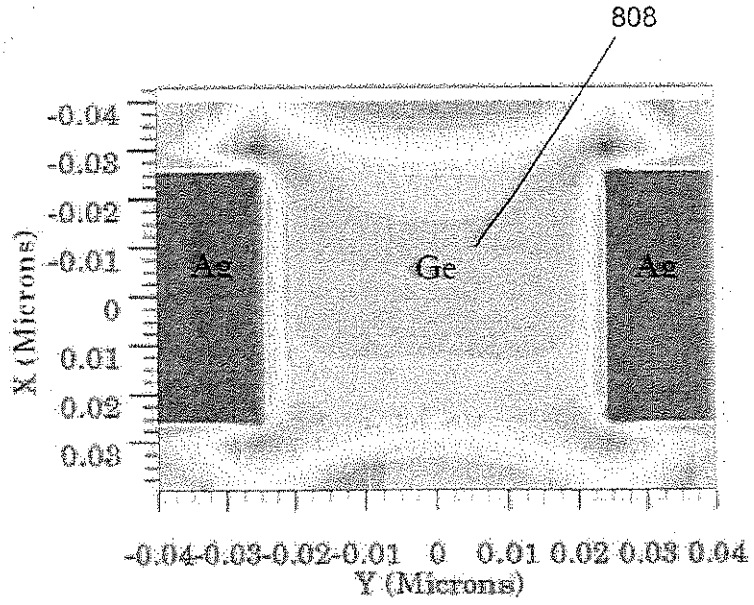

Figure 8

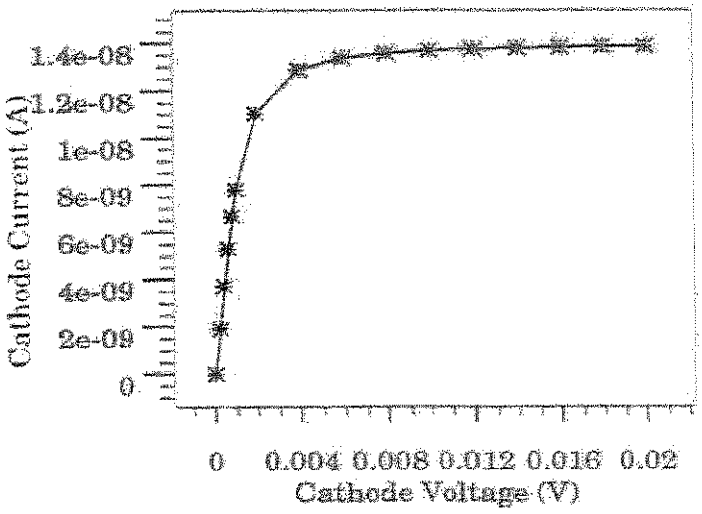

Figure 9

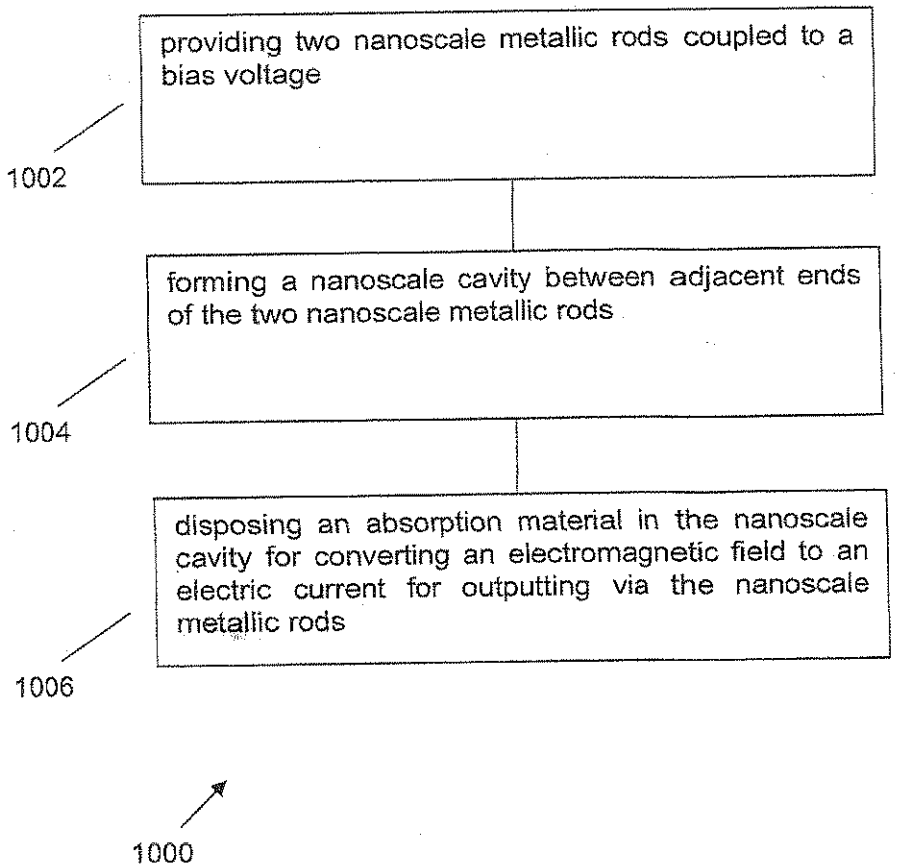
providing two nanoscale metallic rods coupled to a bias voltage
1002
forming a nanoscale cavity between adjacent ends of the two nanoscale metallic rods
1004
disposing an absorption material in the nanoscale cavity for converting an electromagnetic field to an electric current for outputting via the nanoscale metallic rods
1006
1000

Figure 10