PCT WORLD INTELLECTUAL PROPERTY ORGANIZATION
International Bureau

INTERNATIONAL APPLICATION PUBLISHED UNDER THE PATENT COOPERATION TREATY (PCT)

(51) International Patent Classification 6 :
B60R 13/01, 7/00, B62D 29/00, 21/00, E04C 2/00, 2/32, B29C 1/26, 43/10, 47/00, 65/00, B32B 31/06, 7/04, 7/08

A1

(11) International Publication Number: **WO 00/09362**

(43) International Publication Date: 24 February 2000 (24.02.00)

(21) International Application Number: PCT/US99/18163

(22) International Filing Date: 11 August 1999 (11.08.99)

(30) Priority Data:
60/096,075 11 August 1998 (11.08.98) US

(71) Applicant *(for all designated States except US)*: DAIMLER-CHRYSLER AG [DE/DE]; Epplestrasse 225, D-70567 Stuttgart (DE).

(72) Inventor; and
(75) Inventor/Applicant *(for US only)*: BELACK, Kevin, P. [US/US]; 304 Grandview Drive, Pittsburgh, PA 15317-3037 (US).

(74) Agents: ORKIN, Russell, D. et al.; Webb Ziesenheim Logsdon Orkin & Hanson, P.C., 700 Koppers Building, 436 Seventh Avenue, Pittsburgh, PA 15219-1818 (US).

(81) Designated States: AE, AL, AM, AT, AT (Utility model), AU, AZ, BA, BB, BG, BR, BY, CA, CH, CN, CR, CU, CZ, CZ (Utility model), DE, DE (Utility model), DK, DK (Utility model), DM, EE, EE (Utility model), ES, FI, FI (Utility model), GB, GD, GE, GH, GM, HR, HU, ID, IL, IN, IS, JP, KE, KG, KP, KR, KZ, LC, LK, LR, LS, LT, LU, LV, MD, MG, MK, MN, MW, MX, NO, NZ, PL, PT, RO, RU, SD, SE, SG, SI, SK, SK (Utility model), SL, TJ, TM, TR, TT, UA, UG, US, UZ, VN, YU, ZA, ZW, ARIPO patent (GH, GM, KE, LS, MW, SD, SL, SZ, UG, ZW), Eurasian patent (AM, AZ, BY, KG, KZ, MD, RU, TJ, TM), European patent (AT, BE, CH, CY, DE, DK, ES, FI, FR, GB, GR, IE, IT, LU, MC, NL, PT, SE), OAPI patent (BF, BJ, CF, CG, CI, CM, GA, GN, GW, ML, MR, NE, SN, TD, TG).

Published
With international search report.

(54) Title: PEOPLE MOVER CARSHELLS

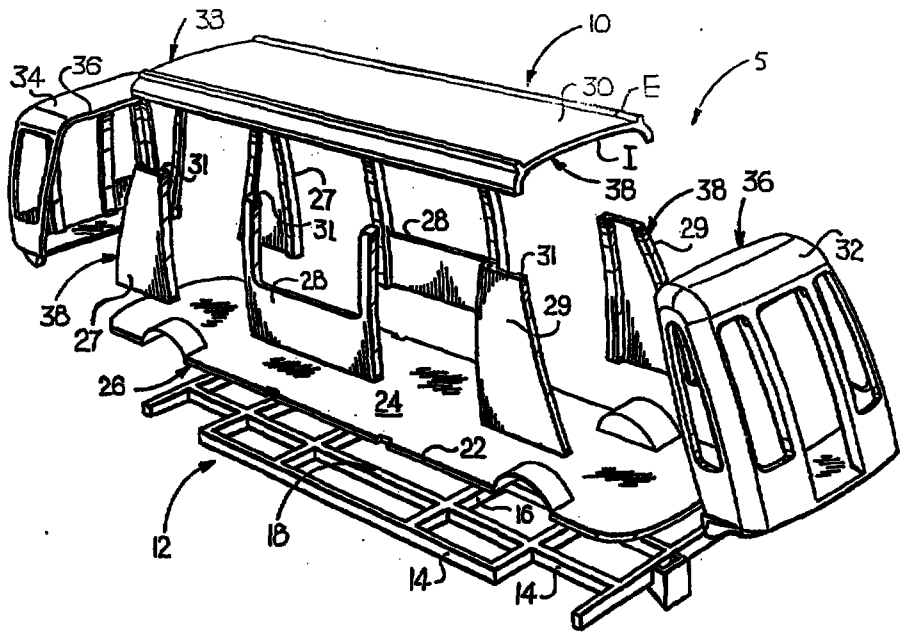

(57) Abstract

People mover carshells (10), which include a plurality of body panels which are secured to each other through an adhesive. Mechanical fasteners may also be used to prevent peeling of the body panels. The panels are formed from a composite that includes an instumescent fabric layer resulting in a fireproof panel.