(12) INTERNATIONAL APPLICATION PUBLISHED UNDER THE PATENT COOPERATION TREATY (PCT)

(19) World Intellectual Property Organization
International Bureau

(43) International Publication Date
20 November 2008 (20.11.2008)

PCT

(10) International Publication Number
WO 2008/140541 A1

(51) International Patent Classification:
H01L 21/60 (2006.01) *H01L 21/00* (2006.01)
B23K 20/00 (2006.01)

(21) International Application Number:
PCT/US2007/080533

(22) International Filing Date: 5 October 2007 (05.10.2007)

(25) Filing Language: English

(26) Publication Language: English

(30) Priority Data:
60/938,274 16 May 2007 (16.05.2007) US

(71) Applicant *(for all designated States except US)*: **KULICKE AND SOFFA INDUSTRIES, INC.** [US/US]; 1005 Virginia Drive, Fort Washington, PA 19034 (US).

(72) Inventors; and
(75) Inventors/Applicants *(for US only)*: **HU, Chunlong** [CN/US]; 812 High Ridge Road, Stamford, CT 06905 (US). **MOLNAR, John, David** [US/US]; 500 Vestry Drive, Ambler, PA 19002 (US). **SOOD, Deepak** [US/US]; 240 Willow Wood Drive, New Britain, PA 18901 (US). **QIN, Wei** [US/US]; 4 Andrew Lane, Lansdale, PA 19446 (US). **FRASCH, Eugene, Walter** [US/US]; 1012 E. Creamery Road, Perkasie, PA 18944 (US). **AHMAD, Ziauddin** [PK/US]; 700 Woodfield Road, Villanova, PA 19085 (US).

(74) Agent: **SPLETZER, Christopher, M.**; Kulicke and Soffa Industries, Inc., 1005 Virginia Drive, Fort Washington, PA 19034 (US).

(81) Designated States *(unless otherwise indicated, for every kind of national protection available)*: AE, AG, AL, AM, AT, AU, AZ, BA, BB, BG, BH, BR, BW, BY, BZ, CA, CH, CN, CO, CR, CU, CZ, DE, DK, DM, DO, DZ, EC, EE, EG, ES, FI, GB, GD, GE, GH, GM, GT, HN, HR, HU, ID, IL, IN, IS, JP, KE, KG, KM, KN, KP, KR, KZ, LA, LC, LK, LR, LS, LT, LU, LY, MA, MD, ME, MG, MK, MN, MW, MX, MY, MZ, NA, NG, NI, NO, NZ, OM, PG, PH, PL,

[Continued on next page]

(54) Title: WIRE BONDING METHODS AND BONDING FORCE CALIBRATION

(57) Abstract: A method of applying bonding energy to form a bond between a portion of a wire and a contact of a bonding location using a wire bonding machine is provided. The method includes: (1) moving a bonding tool towards the contact; (2) detecting when a portion of the contact (100a) is pressed against a device supporting surface (112) of the wire bonding machine; and (3) applying bonding energy to the portion of the contact such that a bond is formed between the contact and the portion of wire.

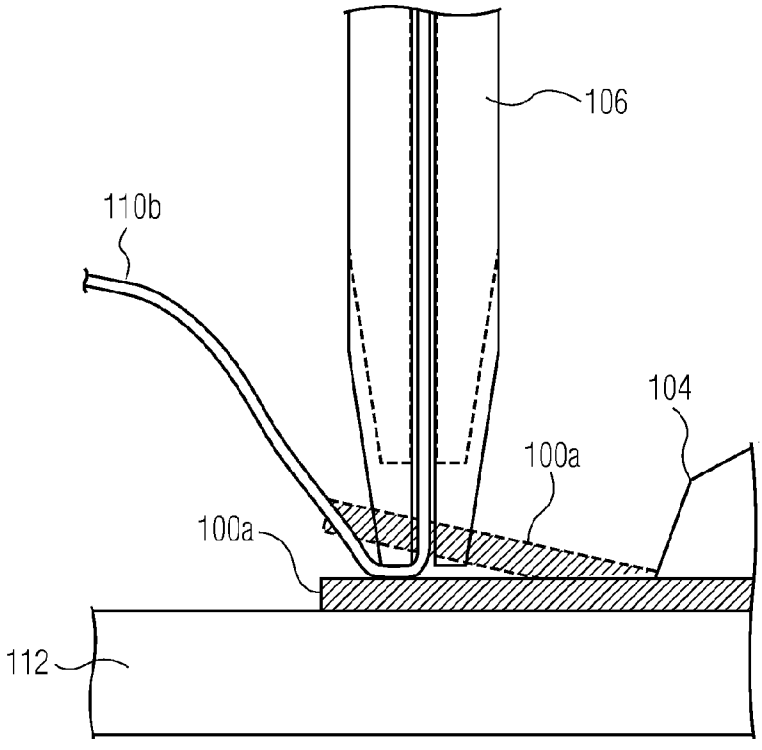

FIG. 1B

WO 2008/140541 A1

PT, RO, RS, RU, SC, SD, SE, SG, SK, SL, SM, SV, SY, TJ, TM, TN, TR, TT, TZ, UA, UG, US, UZ, VC, VN, ZA, ZM, ZW.

(84) **Designated States** *(unless otherwise indicated, for every kind of regional protection available)*: ARIPO (BW, GH, GM, KE, LS, MW, MZ, NA, SD, SL, SZ, TZ, UG, ZM, ZW), Eurasian (AM, AZ, BY, KG, KZ, MD, RU, TJ, TM), European (AT, BE, BG, CH, CY, CZ, DE, DK, EE, ES, FI, FR, GB, GR, HU, IE, IS, IT, LT, LU, LV, MC, MT, NL, PL, PT, RO, SE, SI, SK, TR), OAPI (BF, BJ, CF, CG, CI, CM, GA, GN, GQ, GW, ML, MR, NE, SN, TD, TG).

Declaration under Rule 4.17:

— *of inventorship (Rule 4.17(iv))*

Published:

— *with international search report*

— *with amended claims*