(12) INTERNATIONAL APPLICATION PUBLISHED UNDER THE PATENT COOPERATION TREATY (PCT)

(19) World Intellectual Property Organization
International Bureau

(43) International Publication Date
14 June 2007 (14.06.2007)

PCT

(10) International Publication Number
WO 2007/067395 A2

(51) International Patent Classification:
B08B 7/00 (2006.01) *B08B 3/00* (2006.01)

(21) International Application Number:
PCT/US2006/045659

(22) International Filing Date:
30 November 2006 (30.11.2006)

(25) Filing Language: English

(26) Publication Language: English

(30) Priority Data:
11/294,921 5 December 2005 (05.12.2005) US

(71) Applicant *(for all designated States except US)*: **SEMITOOL, INC.** [US/US]; 655 West Reserve Drive, Kalispell, MT 59901 (US).

(72) Inventors; and
(75) Inventors/Applicants *(for US only)*: **DAVIS, Jeffry, Alan** [US/US]; 3040 Hwy. 2 East, Kalispell, MT 59901 (US). **HARRIS, Randy, A.** [US/US]; 32 Hillcrest Drive, Kalispell, MT 59901 (US).

(74) Agent: **OHRINER, Kenneth, H.**; P.O. BOX 1208, Seattle, WA 98111-1208 (US).

(81) Designated States *(unless otherwise indicated, for every kind of national protection available)*: AE, AG, AL, AM, AT, AU, AZ, BA, BB, BG, BR, BW, BY, BZ, CA, CH, CN, CO, CR, CU, CZ, DE, DK, DM, DZ, EC, EE, EG, ES, FI, GB, GD, GE, GH, GM, GT, HN, HR, HU, ID, IL, IN, IS, JP, KE, KG, KM, KN, KP, KR, KZ, LA, LC, LK, LR, LS, LT, LU, LV, LY, MA, MD, MG, MK, MN, MW, MX, MY, MZ, NA, NG, NI, NO, NZ, OM, PG, PH, PL, PT, RO, RS, RU, SC, SD, SE, SG, SK, SL, SM, SV, SY, TJ, TM, TN, TR, TT, TZ, UA, UG, US, UZ, VC, VN, ZA, ZM, ZW.

(84) Designated States *(unless otherwise indicated, for every kind of regional protection available)*: ARIPO (BW, GH, GM, KE, LS, MW, MZ, NA, SD, SL, SZ, TZ, UG, ZM, ZW), Eurasian (AM, AZ, BY, KG, KZ, MD, RU, TJ, TM), European (AT, BE, BG, CH, CY, CZ, DE, DK, EE, ES, FI, FR, GB, GR, HU, IE, IS, IT, LT, LU, LV, MC, NL, PL, PT, RO, SE, SI, SK, TR), OAPI (BF, BJ, CF, CG, CI, CM, GA, GN, GQ, GW, ML, MR, NE, SN, TD, TG).

Published:
— *without international search report and to be republished upon receipt of that report*

For two-letter codes and other abbreviations, refer to the "Guidance Notes on Codes and Abbreviations" appearing at the beginning of each regular issue of the PCT Gazette.

(54) **Title:** APPARATUS AND METHOD FOR CLEANING AND DRYING A CONTAINER FOR SEMICONDUCTOR WORKPIECES

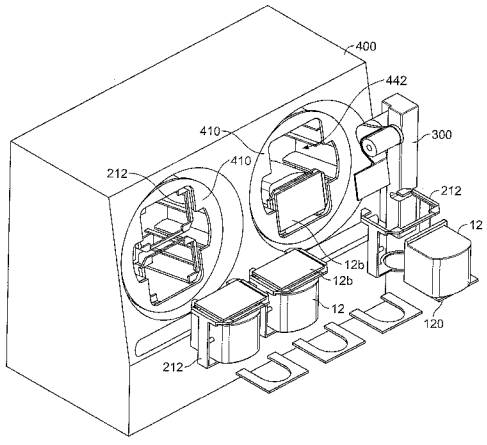

(57) **Abstract:** Apparatus for cleaning and drying a semiconductor wafer container includes a load port with a fixture that receives a dirty container and delivers it to a deck assembly. A carrier receives the container for further handling. A robot with a first end effector removes the container door and places it on a portion of the carrier. The robot includes a second end effector that engages the carrier and elevates the carrier and container for insertion into a process chamber. The process chamber includes a rotor with at least one receptacle. The spinning rotor creates both high pressure and low pressure regions. A processing fluid is provided onto the container and carrier. After a rinse stage and while the rotor is rotating, the container and carrier are dried. The robot then removes both the container and the carrier from the process chamber and reassembles the door to the container.

WO 2007/067395 A2