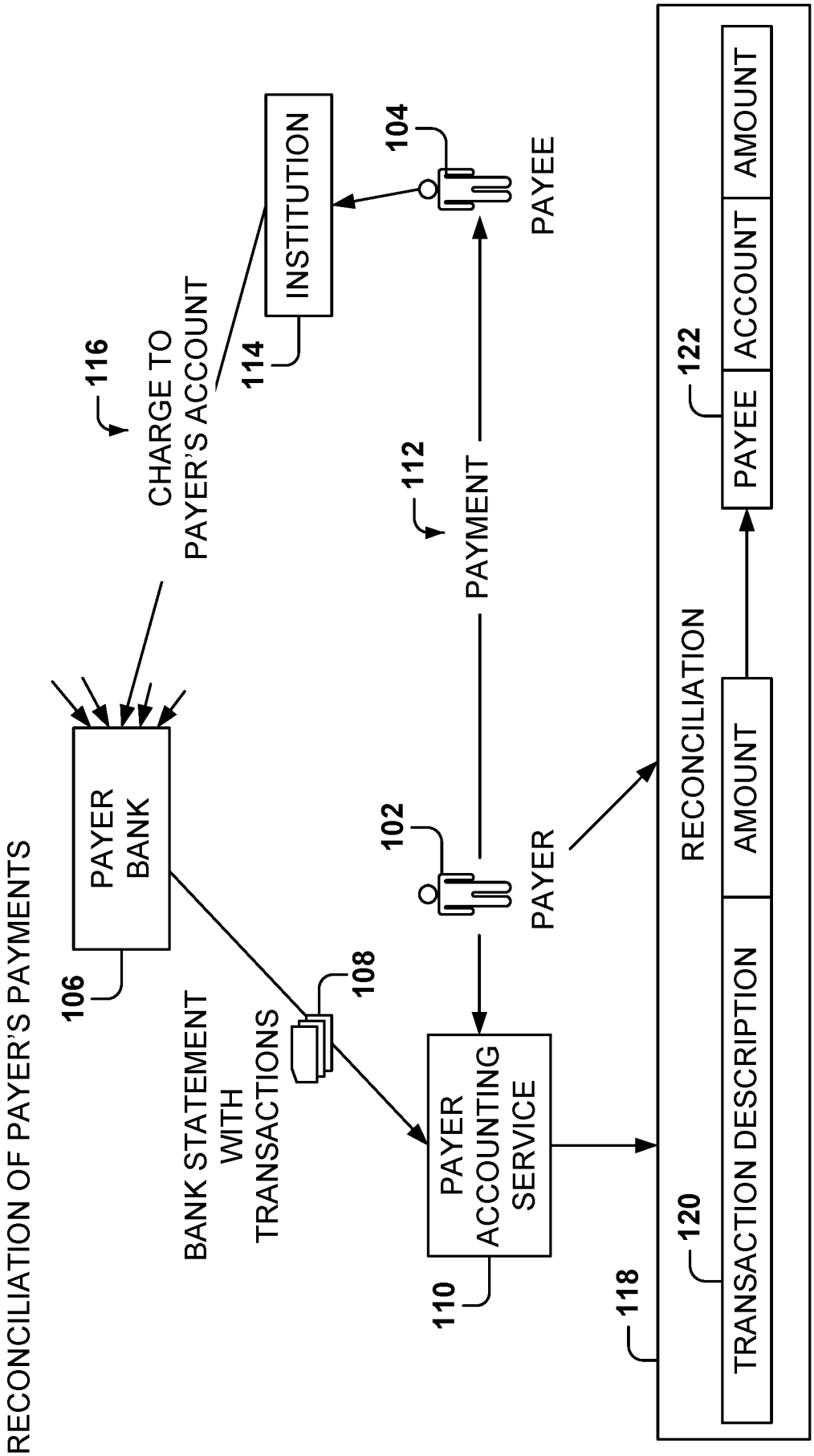
RECONCILIATION OF PAYER'S PAYMENTS
PAYER BANK
106
BANK STATEMENT WITH TRANSACTIONS
108
PAYER ACCOUNTING SERVICE
110
PAYER
102
PAYMENT
112
PAYEE
104
INSTITUTION
114
CHARGE TO PAYER'S ACCOUNT
116
RECONCILIATION
118
TRANSACTION DESCRIPTION
120
AMOUNT
PAYEE
122
ACCOUNT
AMOUNT
RECONCILE EACH TRANSACTION TO IDENTIFY PAYEE, ACCOUNT

Fig. 1

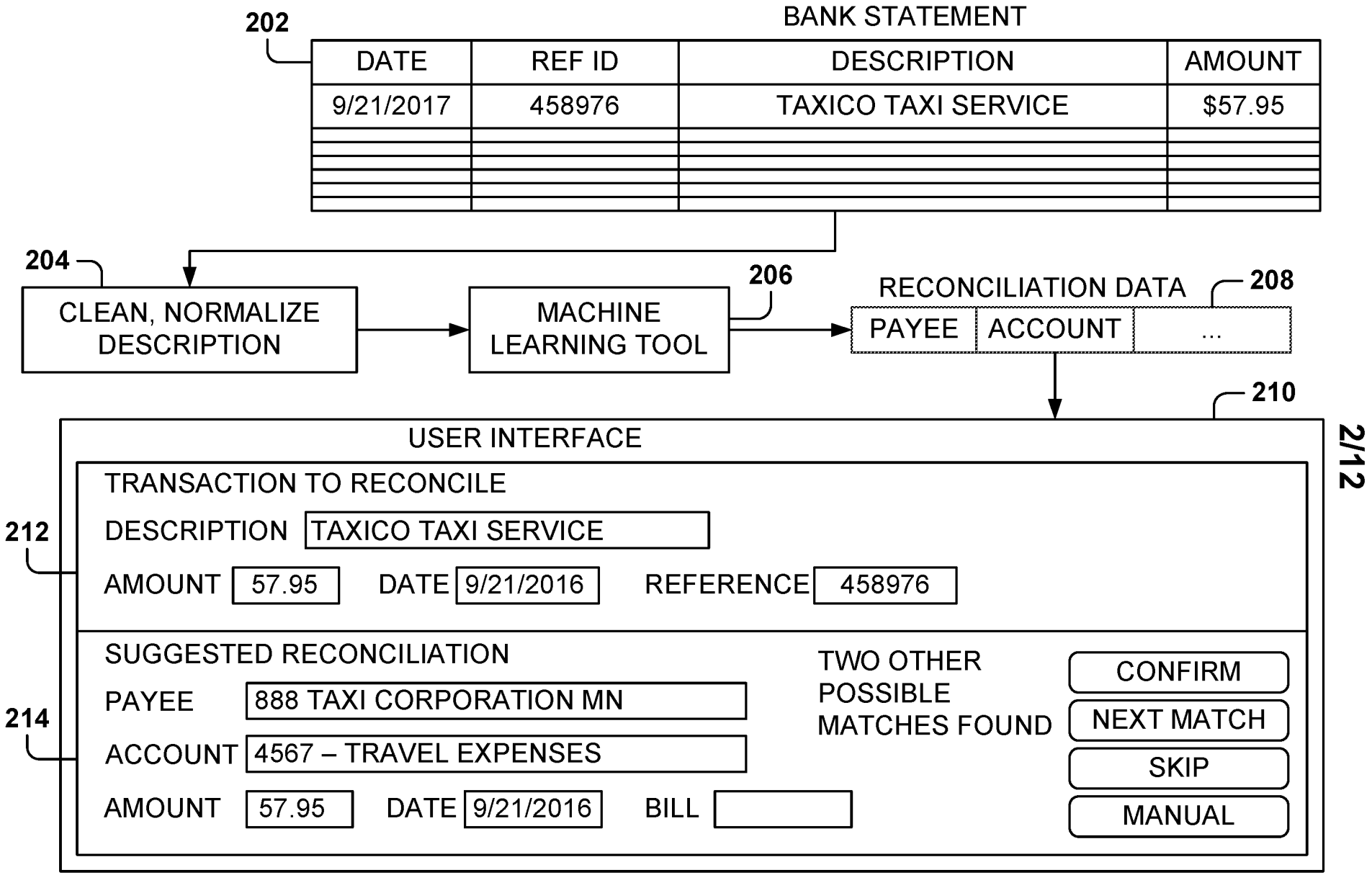
202
BANK STATEMENT
DATE
REF ID
DESCRIPTION
AMOUNT
9/21/2017
458976
TAXICO TAXI SERVICE
$57.95
204
CLEAN, NORMALIZE DESCRIPTION
206
MACHINE LEARNING TOOL
RECONCILIATION DATA
208
PAYEE
ACCOUNT
...
210
USER INTERFACE
2/12
TRANSACTION TO RECONCILE
212
DESCRIPTION
TAXICO TAXI SERVICE
AMOUNT
57.95
DATE
9/21/2016
REFERENCE
458976
SUGGESTED RECONCILIATION
214
PAYEE
888 TAXI CORPORATION MN
ACCOUNT
4567 – TRAVEL EXPENSES
AMOUNT
57.95
DATE
9/21/2016
BILL
TWO OTHER POSSIBLE MATCHES FOUND
CONFIRM
NEXT MATCH
SKIP
MANUAL

Fig. 2A

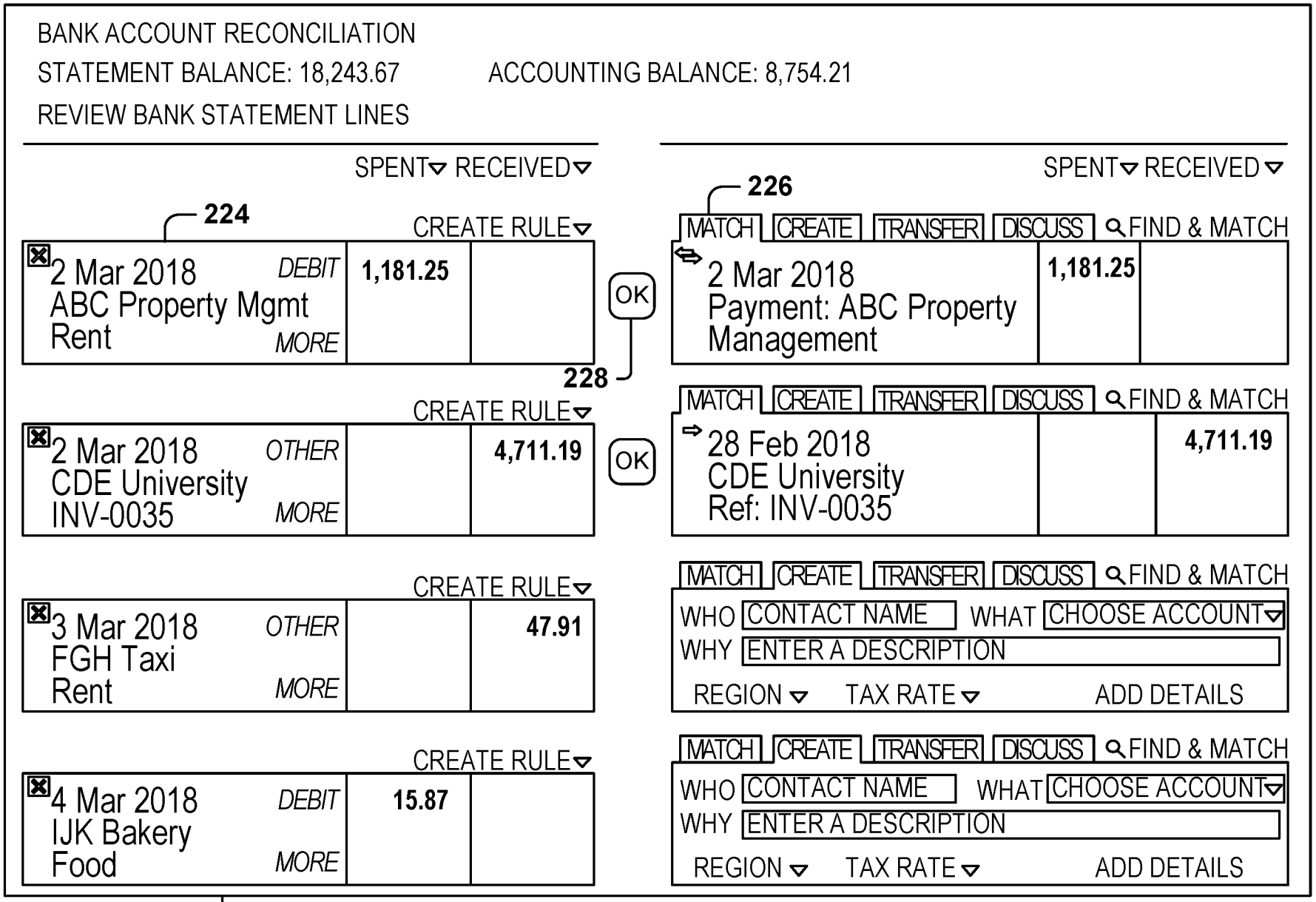
BANK ACCOUNT RECONCILIATION
STATEMENT BALANCE: 18,243.67
ACCOUNTING BALANCE: 8,754.21
REVIEW BANK STATEMENT LINES
SPENT RECEIVED
224
CREATE RULE
2 Mar 2018 DEBIT 1,181.25
ABC Property Mgmt
Rent MORE
OK
228
226
MATCH CREATE TRANSFER DISCUSS FIND & MATCH
2 Mar 2018 1,181.25
Payment: ABC Property Management
CREATE RULE
2 Mar 2018 OTHER 4,711.19
CDE University
INV-0035 MORE
OK
MATCH CREATE TRANSFER DISCUSS FIND & MATCH
28 Feb 2018 4,711.19
CDE University
Ref: INV-0035
CREATE RULE
3 Mar 2018 OTHER 47.91
FGH Taxi
Rent MORE
MATCH CREATE TRANSFER DISCUSS FIND & MATCH
WHO CONTACT NAME WHAT CHOOSE ACCOUNT
WHY ENTER A DESCRIPTION
REGION TAX RATE ADD DETAILS
CREATE RULE
4 Mar 2018 DEBIT 15.87
IJK Bakery
Food MORE
MATCH CREATE TRANSFER DISCUSS FIND & MATCH
WHO CONTACT NAME WHAT CHOOSE ACCOUNT
WHY ENTER A DESCRIPTION
REGION TAX RATE ADD DETAILS
222

Fig. 2B

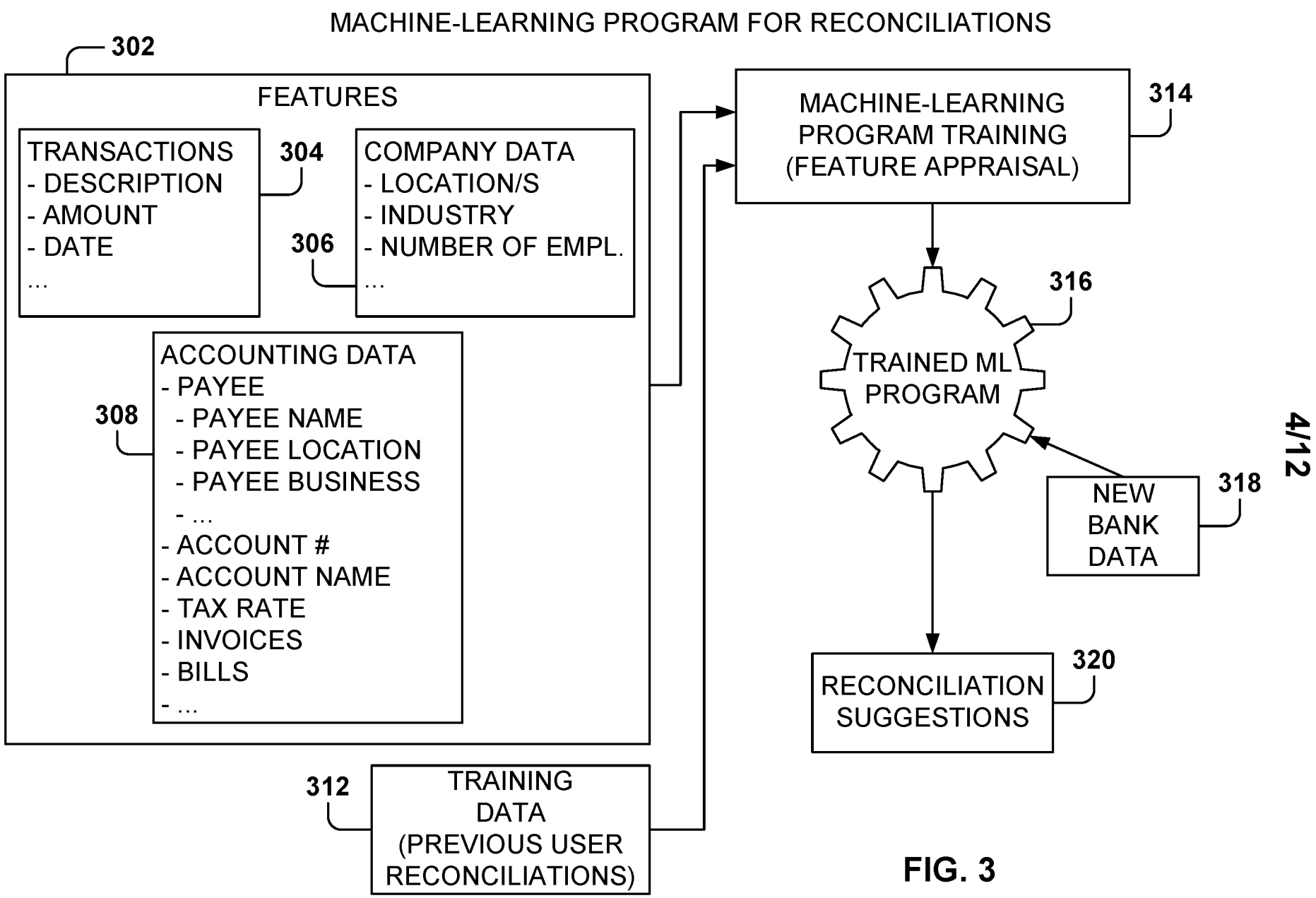
MACHINE-LEARNING PROGRAM FOR RECONCILIATIONS
302
FEATURES
TRANSACTIONS
- DESCRIPTION
- AMOUNT
- DATE
...
304
COMPANY DATA
- LOCATION/S
- INDUSTRY
- NUMBER OF EMPL.
...
306
ACCOUNTING DATA
- PAYEE
- PAYEE NAME
- PAYEE LOCATION
- PAYEE BUSINESS
- ...
- ACCOUNT #
- ACCOUNT NAME
- TAX RATE
- INVOICES
- BILLS
- ...
308
MACHINE-LEARNING PROGRAM TRAINING (FEATURE APPRAISAL)
314
TRAINED ML PROGRAM
316
NEW BANK DATA
318
RECONCILIATION SUGGESTIONS
320
TRAINING DATA (PREVIOUS USER RECONCILIATIONS)
312

FIG. 3

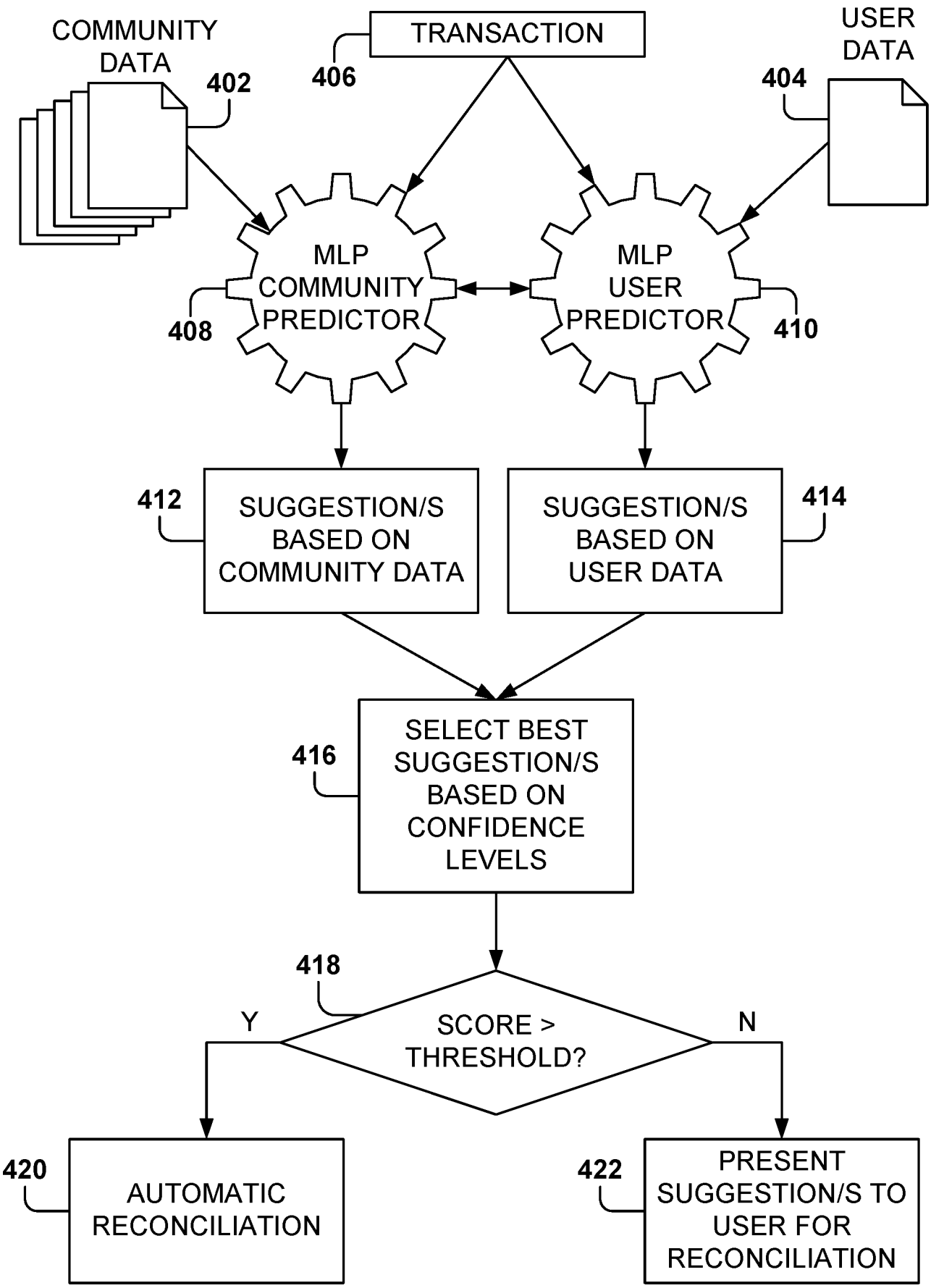
COMMUNITY DATA
402
TRANSACTION
406
USER DATA
404
MLP COMMUNITY PREDICTOR
408
MLP USER PREDICTOR
410
412
SUGGESTION/S BASED ON COMMUNITY DATA
SUGGESTION/S BASED ON USER DATA
414
416
SELECT BEST SUGGESTION/S BASED ON CONFIDENCE LEVELS
418
Y
SCORE > THRESHOLD?
N
420
AUTOMATIC RECONCILIATION
422
PRESENT SUGGESTION/S TO USER FOR RECONCILIATION

Fig. 4

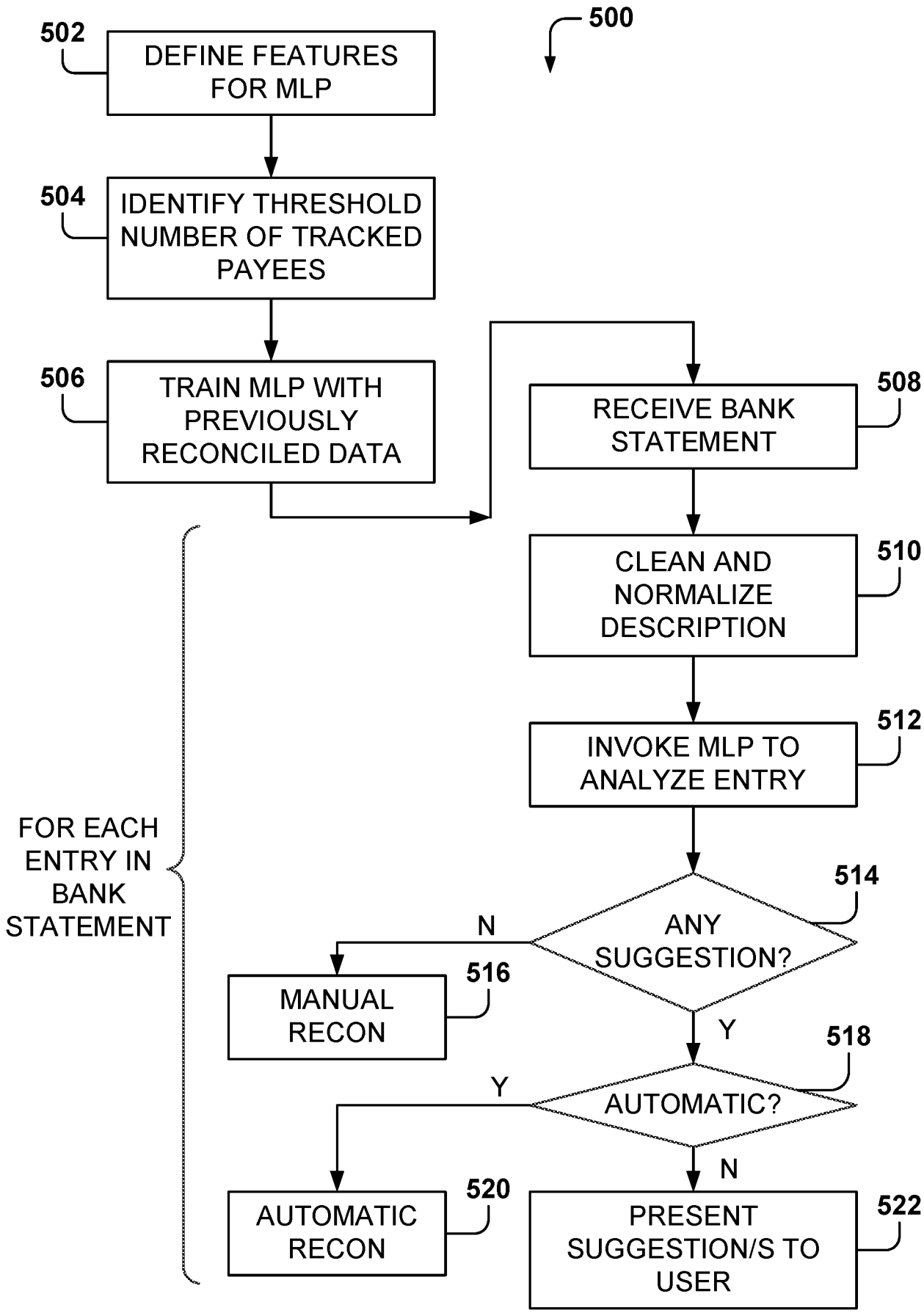
500
502
DEFINE FEATURES FOR MLP
504
IDENTIFY THRESHOLD NUMBER OF TRACKED PAYEES
506
TRAIN MLP WITH PREVIOUSLY RECONCILED DATA
508
RECEIVE BANK STATEMENT
510
CLEAN AND NORMALIZE DESCRIPTION
512
INVOKE MLP TO ANALYZE ENTRY
514
ANY SUGGESTION?
N
516
MANUAL RECON
Y
518
AUTOMATIC?
Y
520
AUTOMATIC RECON
N
522
PRESENT SUGGESTION/S TO USER
FOR EACH ENTRY IN BANK STATEMENT

FIG. 5

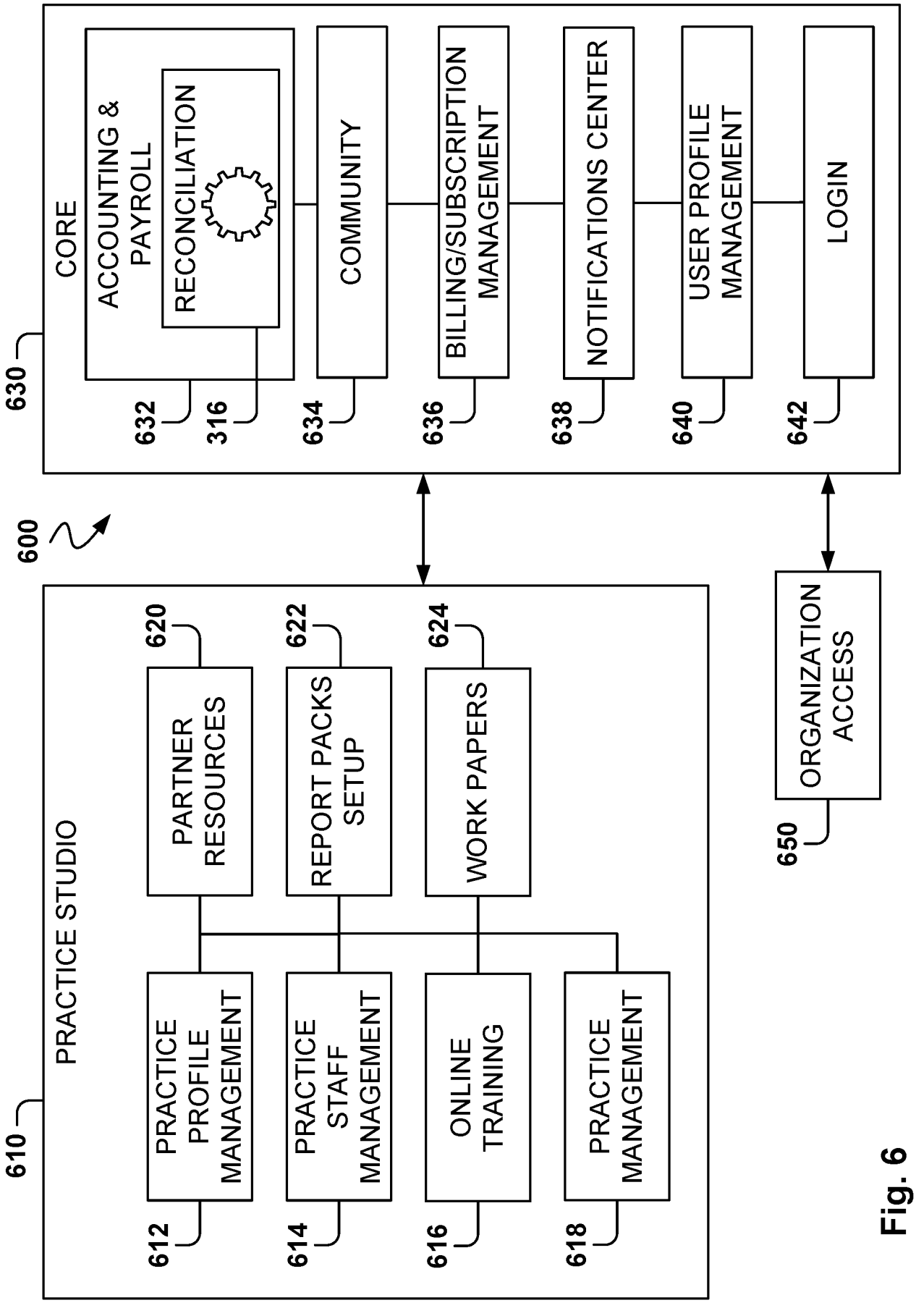
600
630
CORE
ACCOUNTING & PAYROLL
RECONCILIATION
632
316
COMMUNITY
634
BILLING/SUBSCRIPTION MANAGEMENT
636
NOTIFICATIONS CENTER
638
USER PROFILE MANAGEMENT
640
LOGIN
642
610
PRACTICE STUDIO
620
PARTNER RESOURCES
622
REPORT PACKS SETUP
624
WORK PAPERS
PRACTICE PROFILE MANAGEMENT
612
PRACTICE STAFF MANAGEMENT
614
ONLINE TRAINING
616
PRACTICE MANAGEMENT
618
650
ORGANIZATION ACCESS

Fig. 6

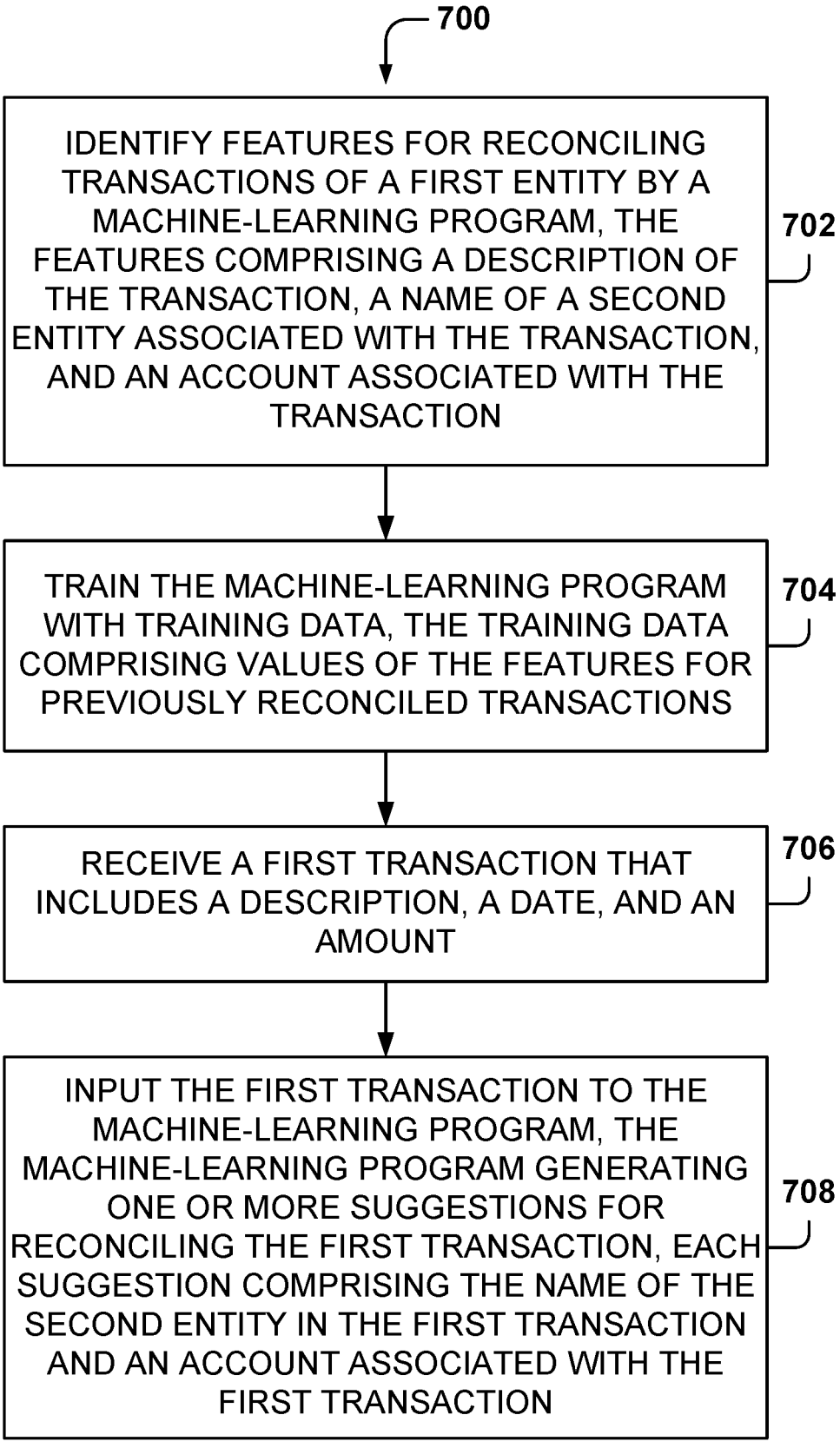
700
IDENTIFY FEATURES FOR RECONCILING TRANSACTIONS OF A FIRST ENTITY BY A MACHINE-LEARNING PROGRAM, THE FEATURES COMPRISING A DESCRIPTION OF THE TRANSACTION, A NAME OF A SECOND ENTITY ASSOCIATED WITH THE TRANSACTION, AND AN ACCOUNT ASSOCIATED WITH THE TRANSACTION
702
TRAIN THE MACHINE-LEARNING PROGRAM WITH TRAINING DATA, THE TRAINING DATA COMPRISING VALUES OF THE FEATURES FOR PREVIOUSLY RECONCILED TRANSACTIONS
704
RECEIVE A FIRST TRANSACTION THAT INCLUDES A DESCRIPTION, A DATE, AND AN AMOUNT
706
INPUT THE FIRST TRANSACTION TO THE MACHINE-LEARNING PROGRAM, THE MACHINE-LEARNING PROGRAM GENERATING ONE OR MORE SUGGESTIONS FOR RECONCILING THE FIRST TRANSACTION, EACH SUGGESTION COMPRISING THE NAME OF THE SECOND ENTITY IN THE FIRST TRANSACTION AND AN ACCOUNT ASSOCIATED WITH THE FIRST TRANSACTION
708

FIG. 7

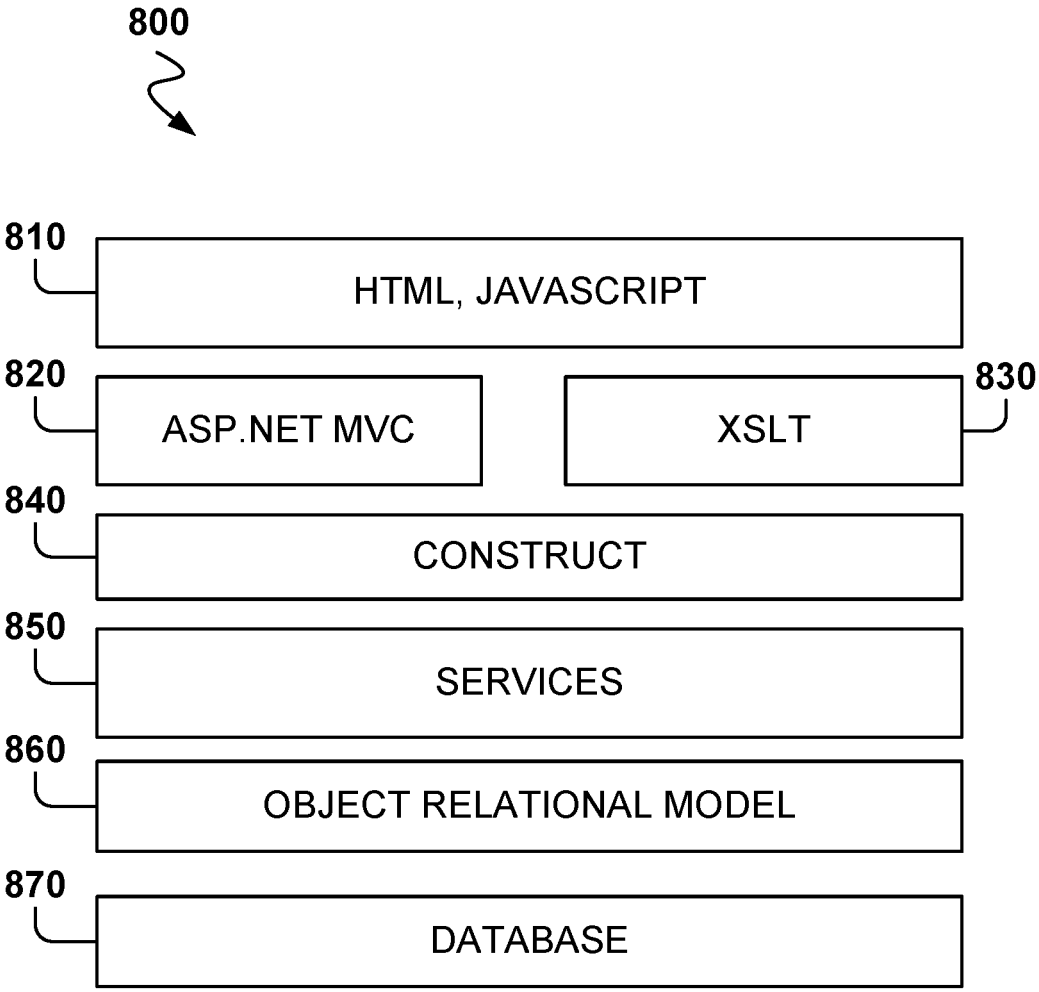
800
810
HTML, JAVASCRIPT
820
ASP.NET MVC
830
XSLT
840
CONSTRUCT
850
SERVICES
860
OBJECT RELATIONAL MODEL
870
DATABASE

Fig. 8

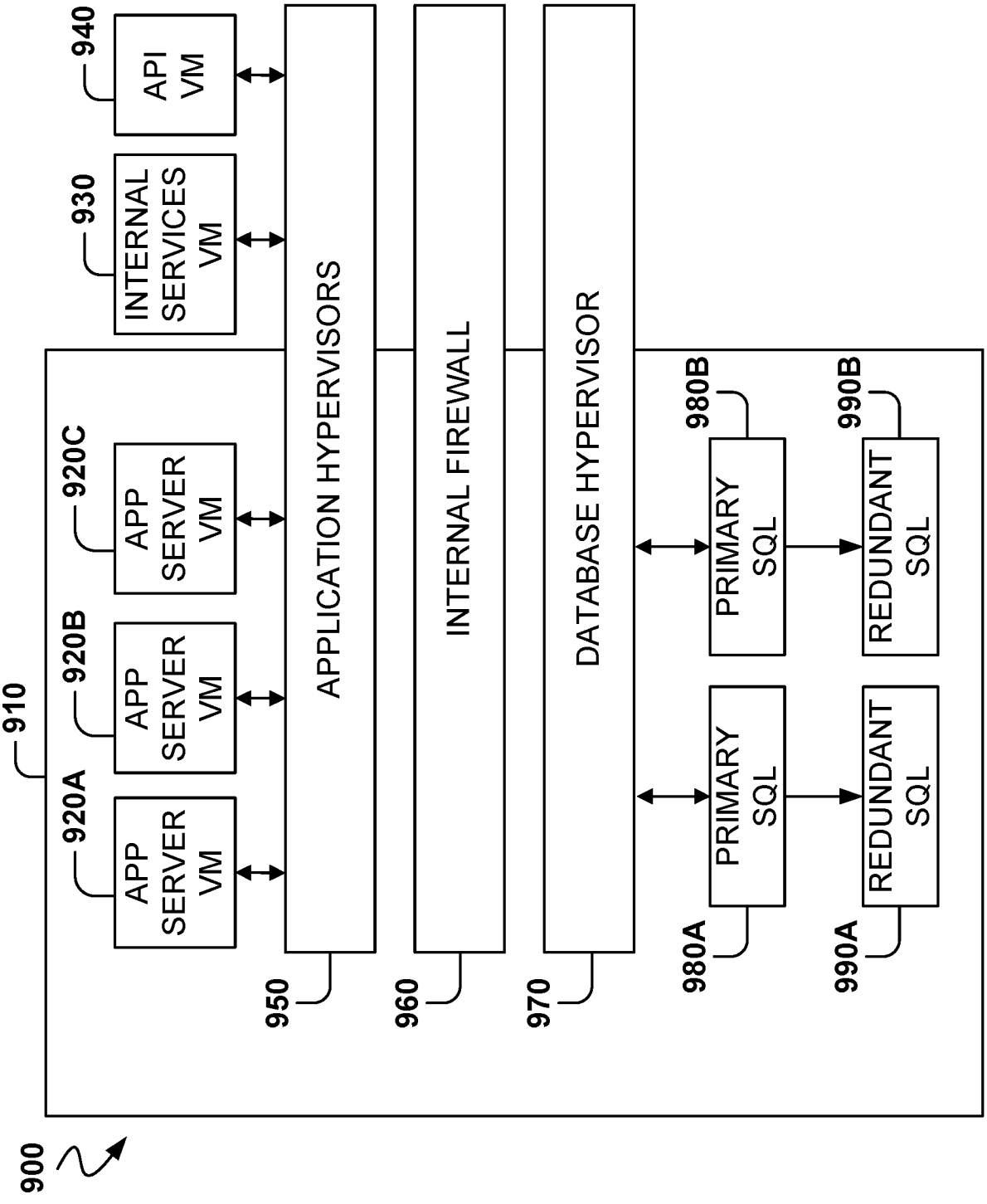
900
910
920A
APP SERVER VM
920B
APP SERVER VM
920C
APP SERVER VM
930
INTERNAL SERVICES VM
940
API VM
950
APPLICATION HYPERVISORS
960
INTERNAL FIREWALL
970
DATABASE HYPERVISOR
980A
PRIMARY SQL
980B
PRIMARY SQL
990A
REDUNDANT SQL
990B
REDUNDANT SQL

Fig. 9

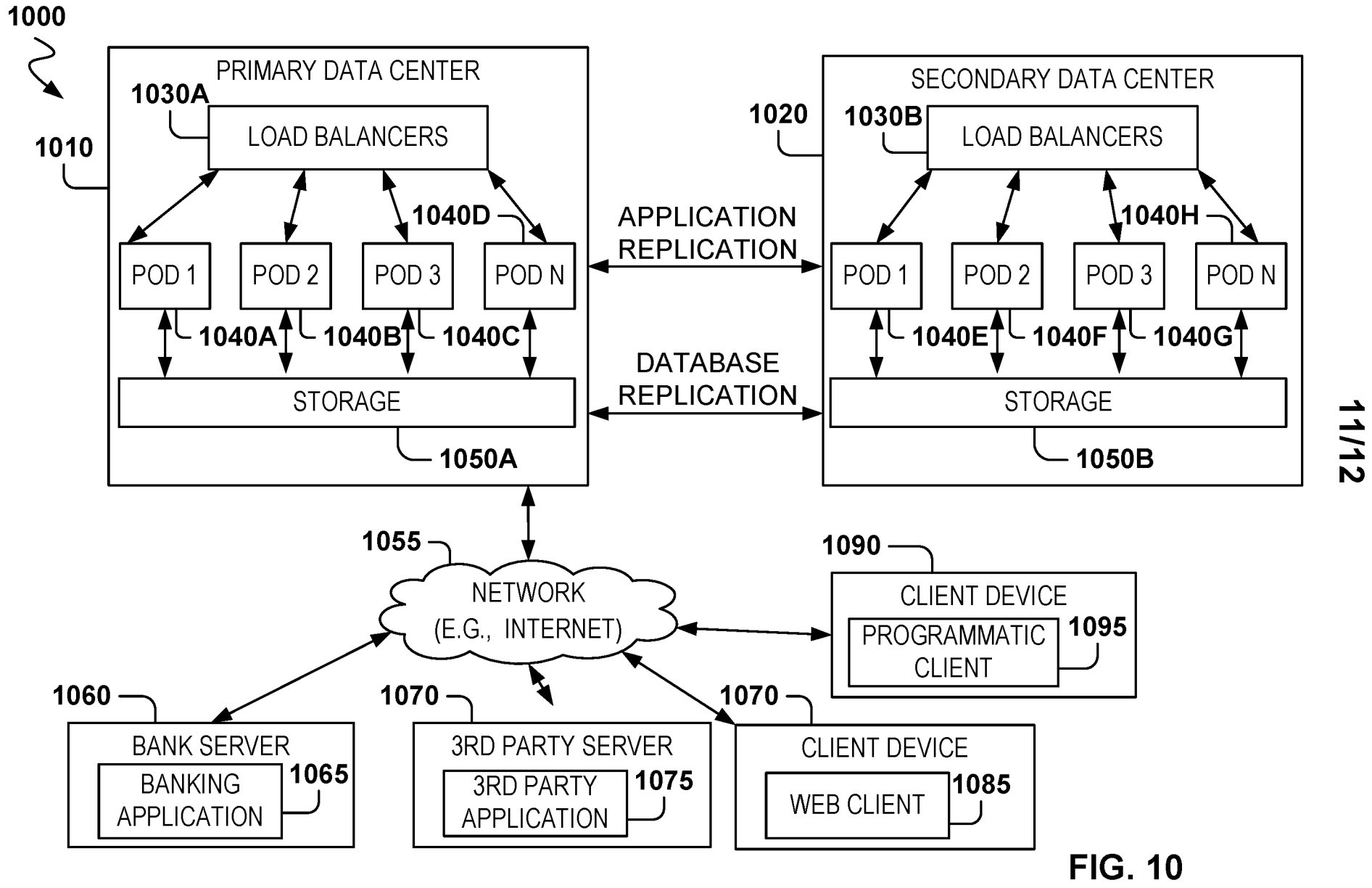
1000
PRIMARY DATA CENTER
1030A
LOAD BALANCERS
1010
1040D
POD 1
POD 2
POD 3
POD N
1040A
1040B
1040C
STORAGE
1050A
APPLICATION REPLICATION
DATABASE REPLICATION
SECONDARY DATA CENTER
1020
1030B
LOAD BALANCERS
1040H
POD 1
POD 2
POD 3
POD N
1040E
1040F
1040G
STORAGE
1050B
1055
NETWORK (E.G., INTERNET)
1090
CLIENT DEVICE
PROGRAMMATIC CLIENT
1095
1060
BANK SERVER
BANKING APPLICATION
1065
1070
3RD PARTY SERVER
3RD PARTY APPLICATION
1075
1070
CLIENT DEVICE
WEB CLIENT
1085

FIG. 10

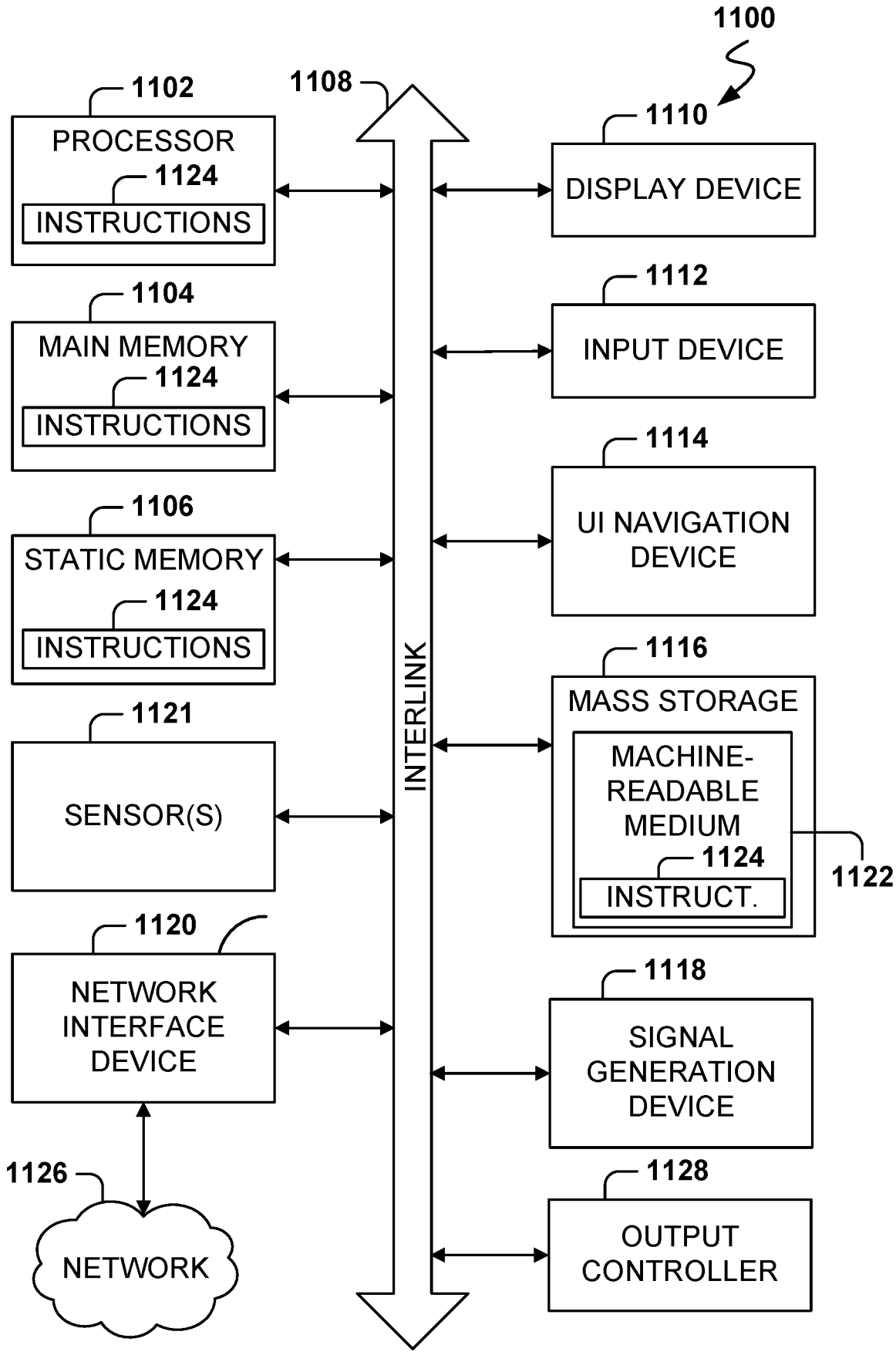
1100
1102
PROCESSOR
1124
INSTRUCTIONS
1104
MAIN MEMORY
1124
INSTRUCTIONS
1106
STATIC MEMORY
1124
INSTRUCTIONS
1121
SENSOR(S)
1120
NETWORK INTERFACE DEVICE
1126
NETWORK
1108
INTERLINK
1110
DISPLAY DEVICE
1112
INPUT DEVICE
1114
UI NAVIGATION DEVICE
1116
MASS STORAGE
MACHINE-READABLE MEDIUM
1124
INSTRUCT.
1122
1118
SIGNAL GENERATION DEVICE
1128
OUTPUT CONTROLLER

FIG. 11