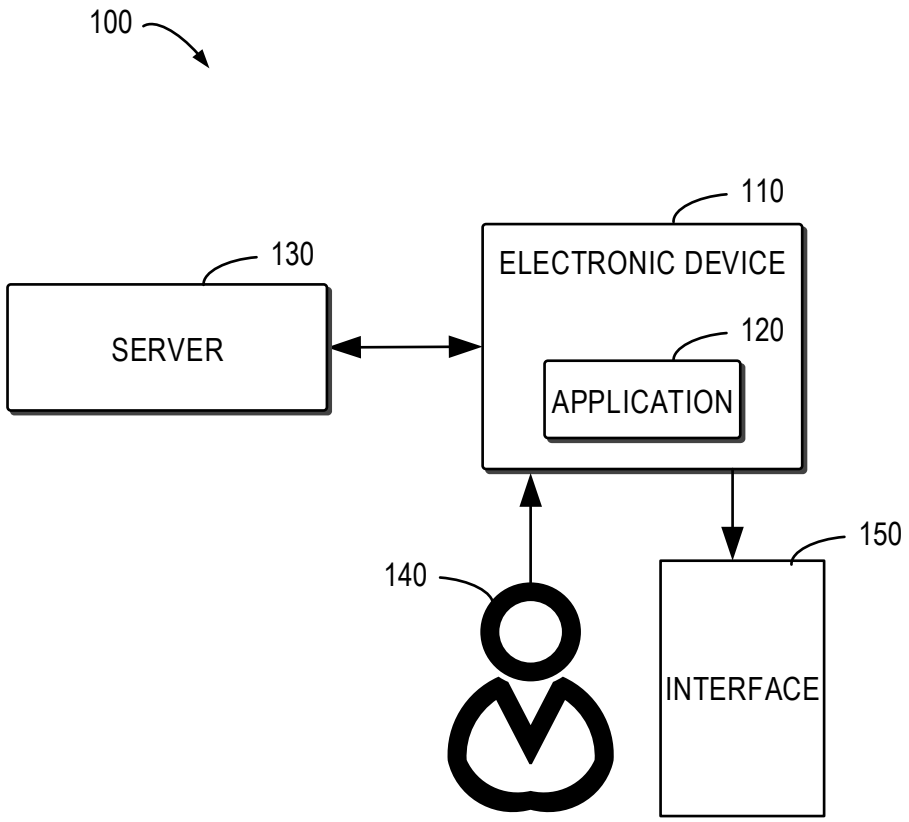
100
110
ELECTRONIC DEVICE
130
SERVER
120
APPLICATION
140
150
INTERFACE

**FIG. 1**

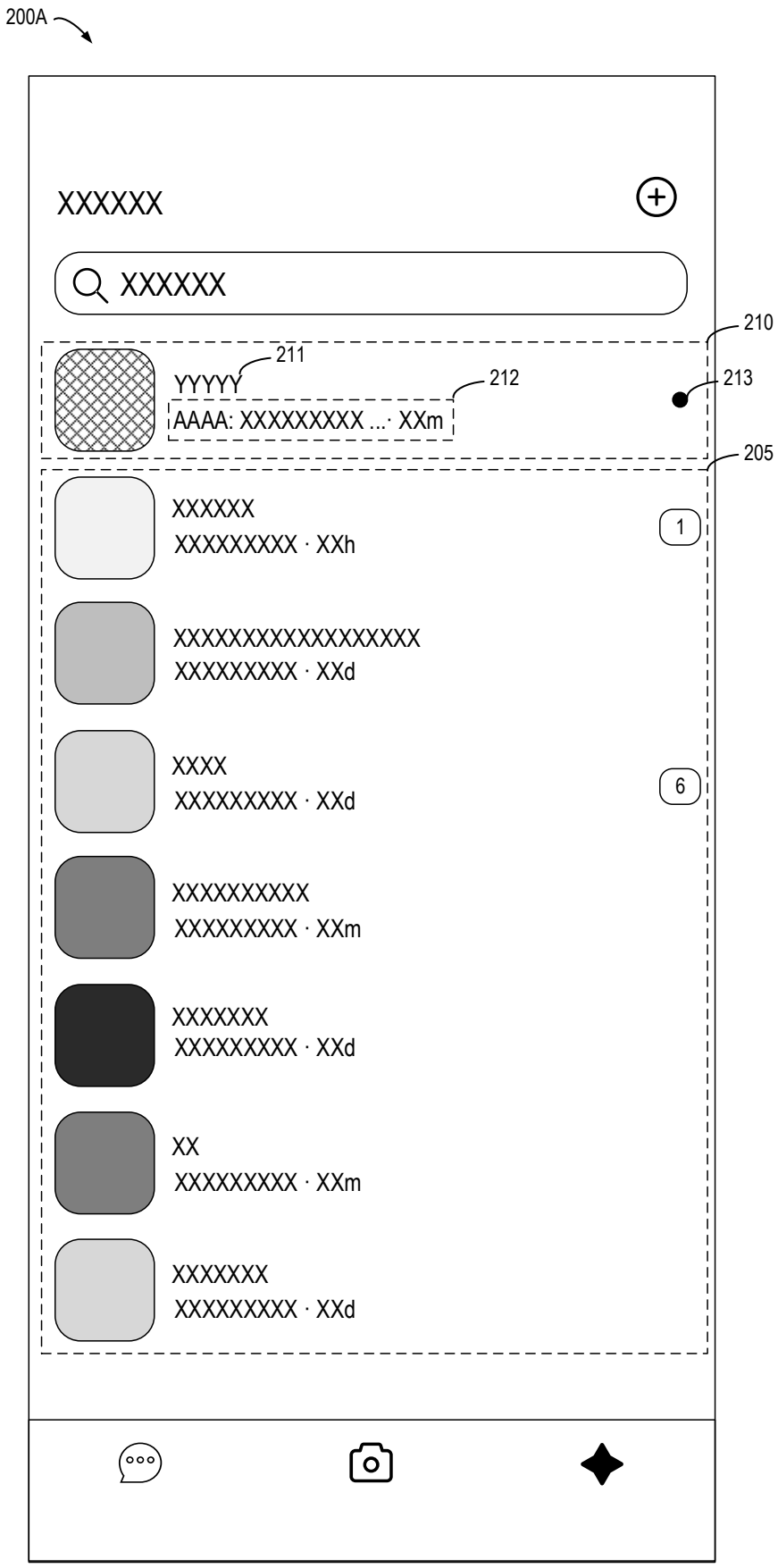
200A
XXXXXX
XXXXXX
210
211
YYYYY
212
213
AAAA: XXXXXXXXX ...· XXm
205
XXXXXX
XXXXXXXXX · XXh
1
XXXXXXXXXXXXXXXXXX
XXXXXXXXX · XXd
XXXX
XXXXXXXXX · XXd
6
XXXXXXXXXX
XXXXXXXXX · XXm
XXXXXXX
XXXXXXXXX · XXd
XX
XXXXXXXXX · XXm
XXXXXXX
XXXXXXXXX · XXd

**FIG. 2A**

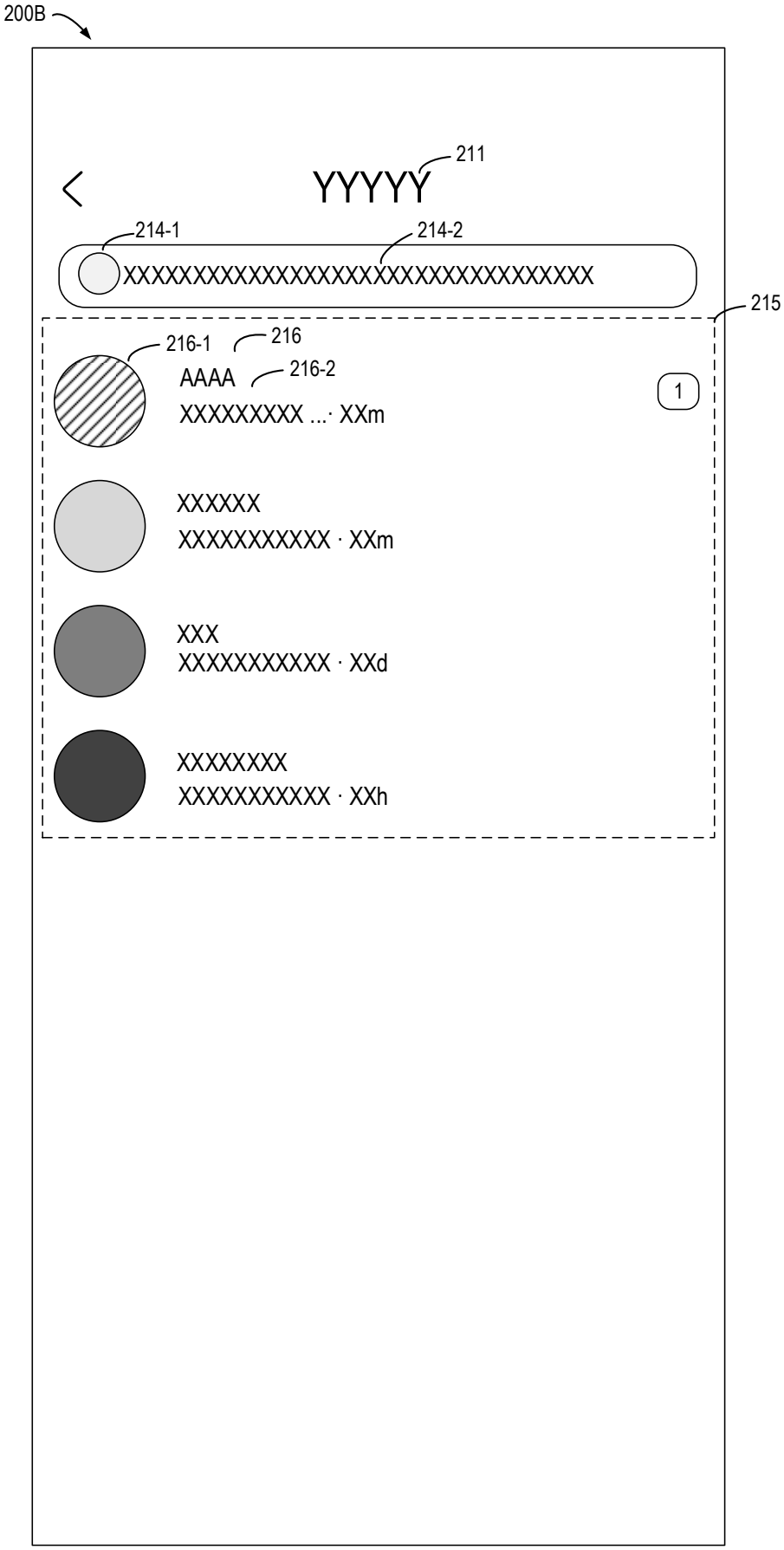
200B
211
YYYYY
214-1
214-2
XXXXXXXXXXXXXXXXXXXXXXXXXXXXXXXX
215
216-1
216
AAAA
216-2
XXXXXXXXX ...· XXm
1
XXXXXX
XXXXXXXXXXX · XXm
XXX
XXXXXXXXXXX · XXd
XXXXXXXX
XXXXXXXXXXX · XXh

**FIG. 2B**

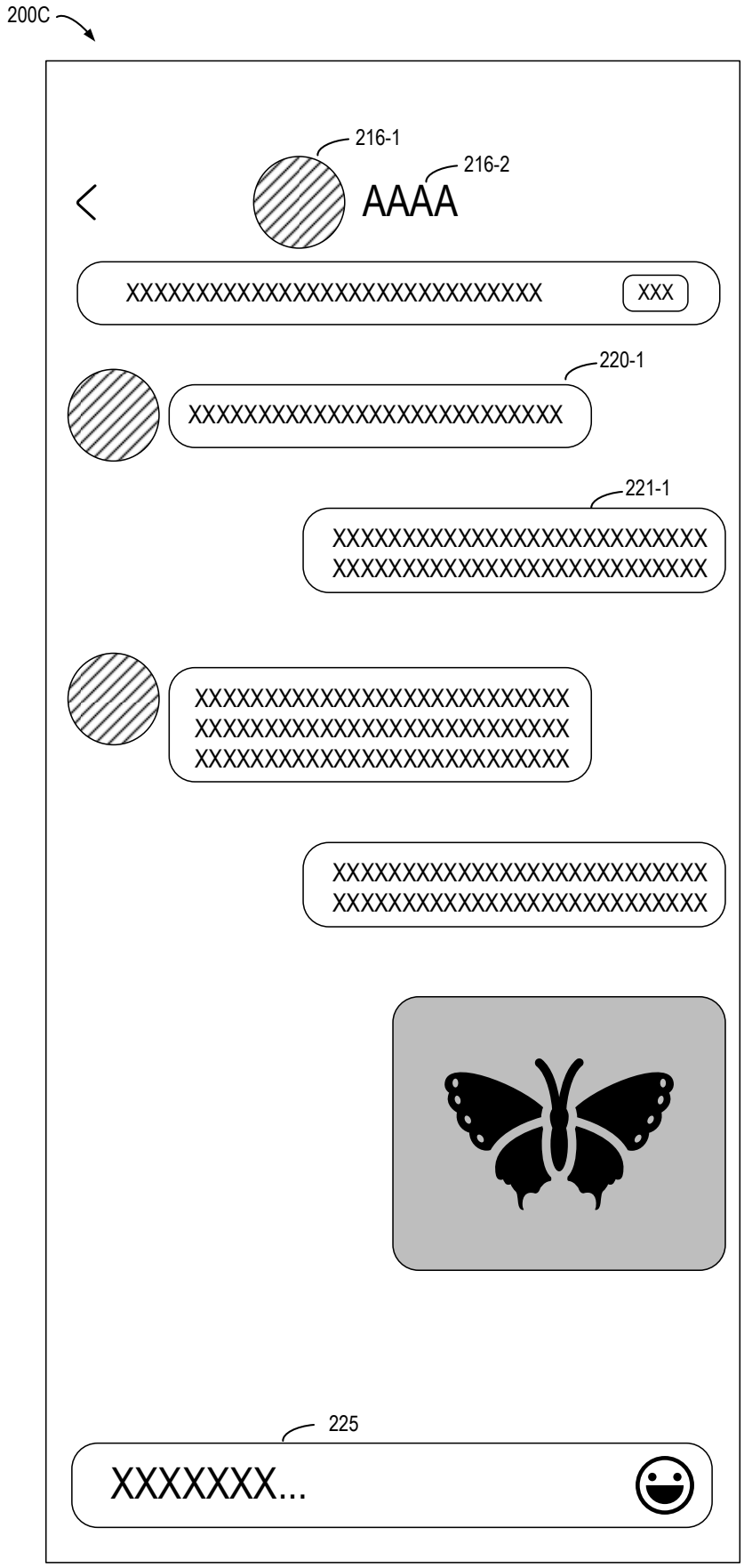
200C
216-1
216-2
AAAA
XXXXXXXXXXXXXXXXXXXXXXXXXXXX
XXX
220-1
XXXXXXXXXXXXXXXXXXXXXXXXXXX
221-1
XXXXXXXXXXXXXXXXXXXXXXXXXXXX
XXXXXXXXXXXXXXXXXXXXXXXXXXXX
XXXXXXXXXXXXXXXXXXXXXXXXXXXX
XXXXXXXXXXXXXXXXXXXXXXXXXXXX
XXXXXXXXXXXXXXXXXXXXXXXXXXXX
XXXXXXXXXXXXXXXXXXXXXXXXXXXX
225
XXXXXXX...

**FIG. 2C**

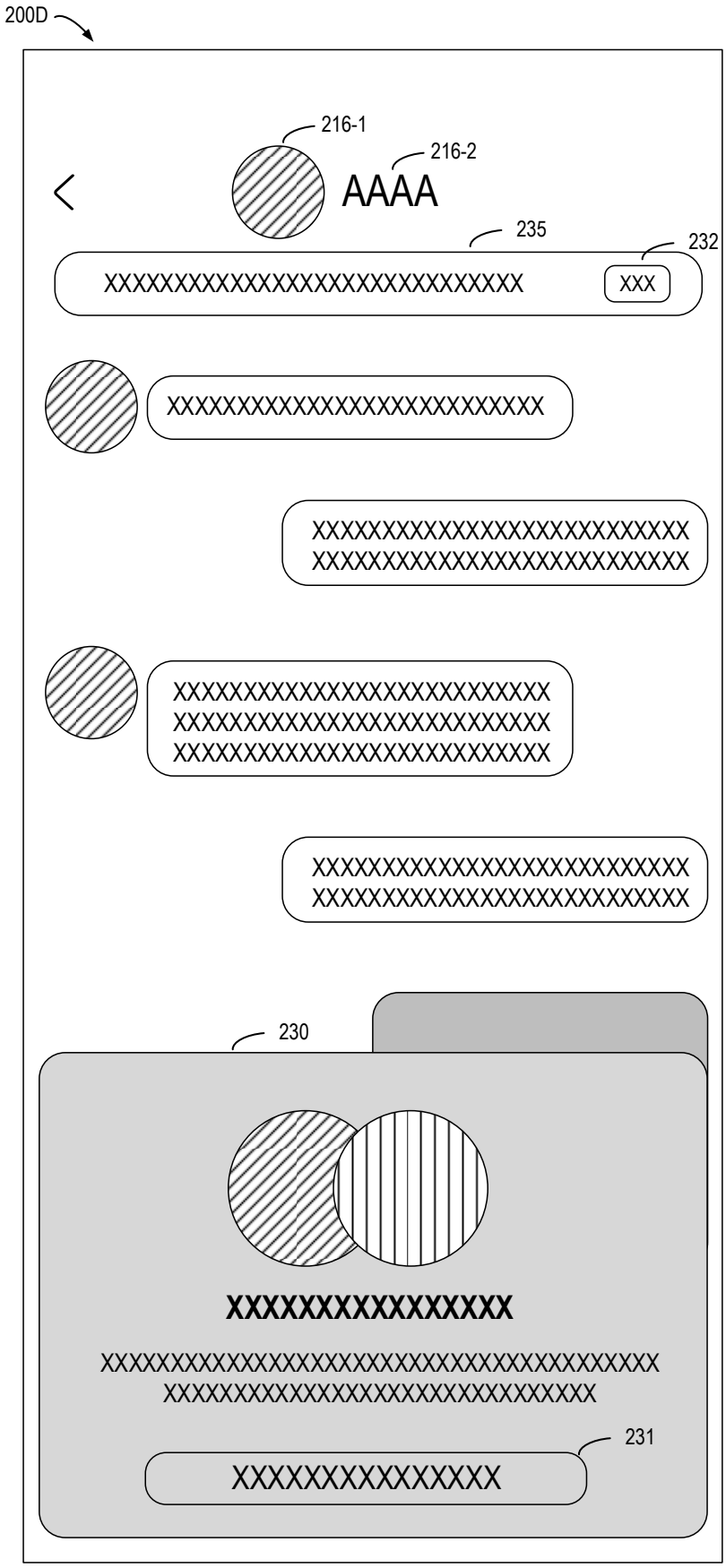
200D
216-1
216-2
AAAA
235
232
XXXXXXXXXXXXXXXXXXXXXXXXXXXX
XXX
XXXXXXXXXXXXXXXXXXXXXXXXXXXX
XXXXXXXXXXXXXXXXXXXXXXXXXXXX
XXXXXXXXXXXXXXXXXXXXXXXXXXXX
XXXXXXXXXXXXXXXXXXXXXXXXXXXX
XXXXXXXXXXXXXXXXXXXXXXXXXXXX
XXXXXXXXXXXXXXXXXXXXXXXXXXXX
230
XXXXXXXXXXXXXXXX
XXXXXXXXXXXXXXXXXXXXXXXXXXXXXXXXXXXXXXXX
XXXXXXXXXXXXXXXXXXXXXXXXXXXXXXXXXXXXXXXX
231
XXXXXXXXXXXXXXX

**FIG. 2D**

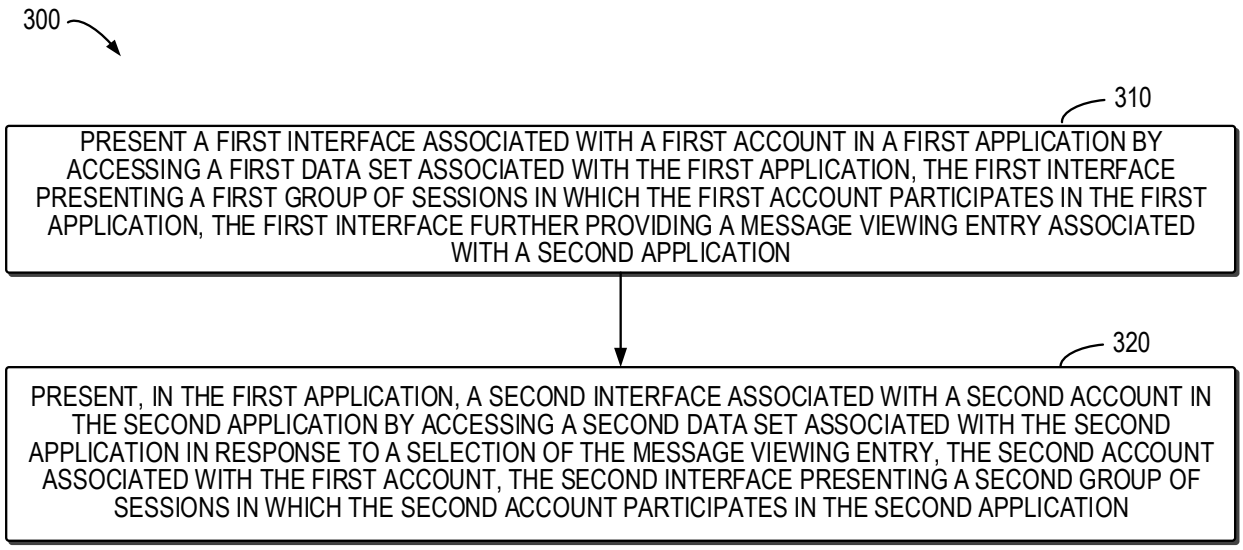
300
310
PRESENT A FIRST INTERFACE ASSOCIATED WITH A FIRST ACCOUNT IN A FIRST APPLICATION BY ACCESSING A FIRST DATA SET ASSOCIATED WITH THE FIRST APPLICATION, THE FIRST INTERFACE PRESENTING A FIRST GROUP OF SESSIONS IN WHICH THE FIRST ACCOUNT PARTICIPATES IN THE FIRST APPLICATION, THE FIRST INTERFACE FURTHER PROVIDING A MESSAGE VIEWING ENTRY ASSOCIATED WITH A SECOND APPLICATION
320
PRESENT, IN THE FIRST APPLICATION, A SECOND INTERFACE ASSOCIATED WITH A SECOND ACCOUNT IN THE SECOND APPLICATION BY ACCESSING A SECOND DATA SET ASSOCIATED WITH THE SECOND APPLICATION IN RESPONSE TO A SELECTION OF THE MESSAGE VIEWING ENTRY, THE SECOND ACCOUNT ASSOCIATED WITH THE FIRST ACCOUNT, THE SECOND INTERFACE PRESENTING A SECOND GROUP OF SESSIONS IN WHICH THE SECOND ACCOUNT PARTICIPATES IN THE SECOND APPLICATION

**FIG. 3**

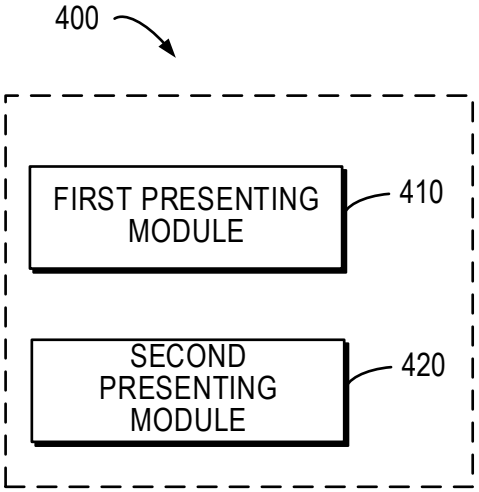
400
FIRST PRESENTING MODULE
410
SECOND PRESENTING MODULE
420

**FIG. 4**

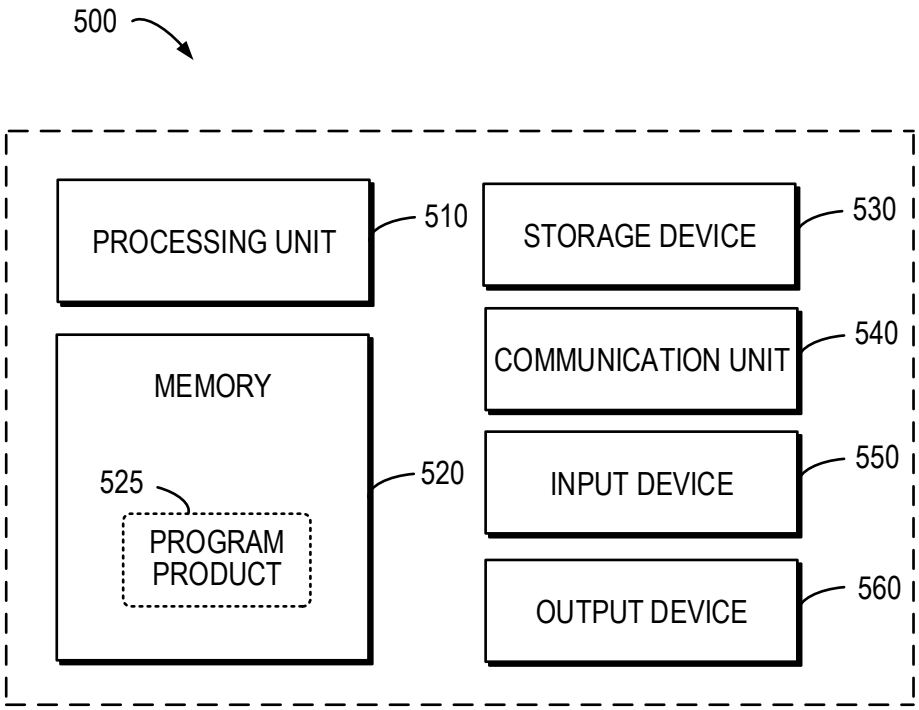
500
PROCESSING UNIT
510
STORAGE DEVICE
530
COMMUNICATION UNIT
540
MEMORY
525
PROGRAM PRODUCT
520
INPUT DEVICE
550
OUTPUT DEVICE
560

**FIG. 5**