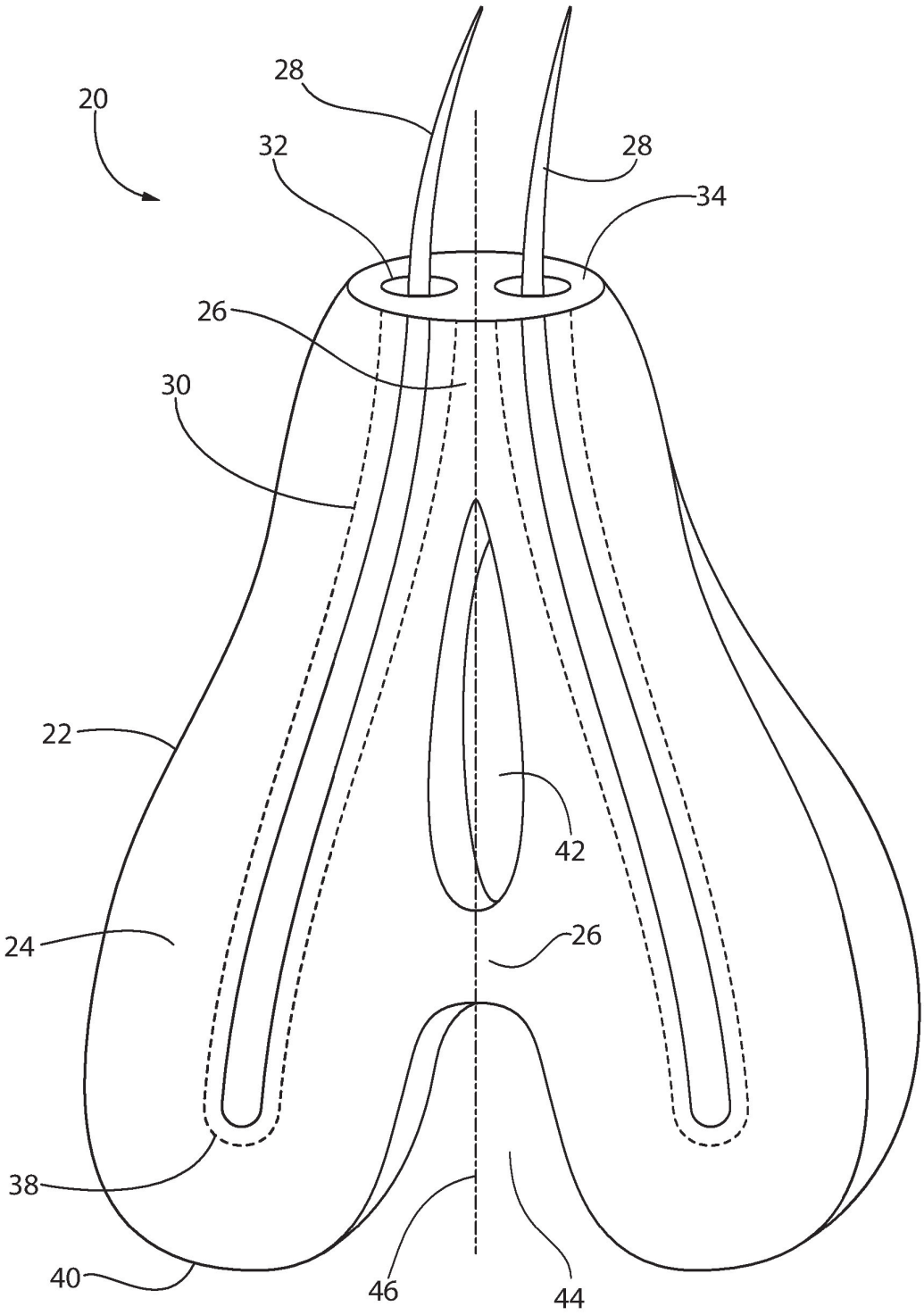

FIG. 1

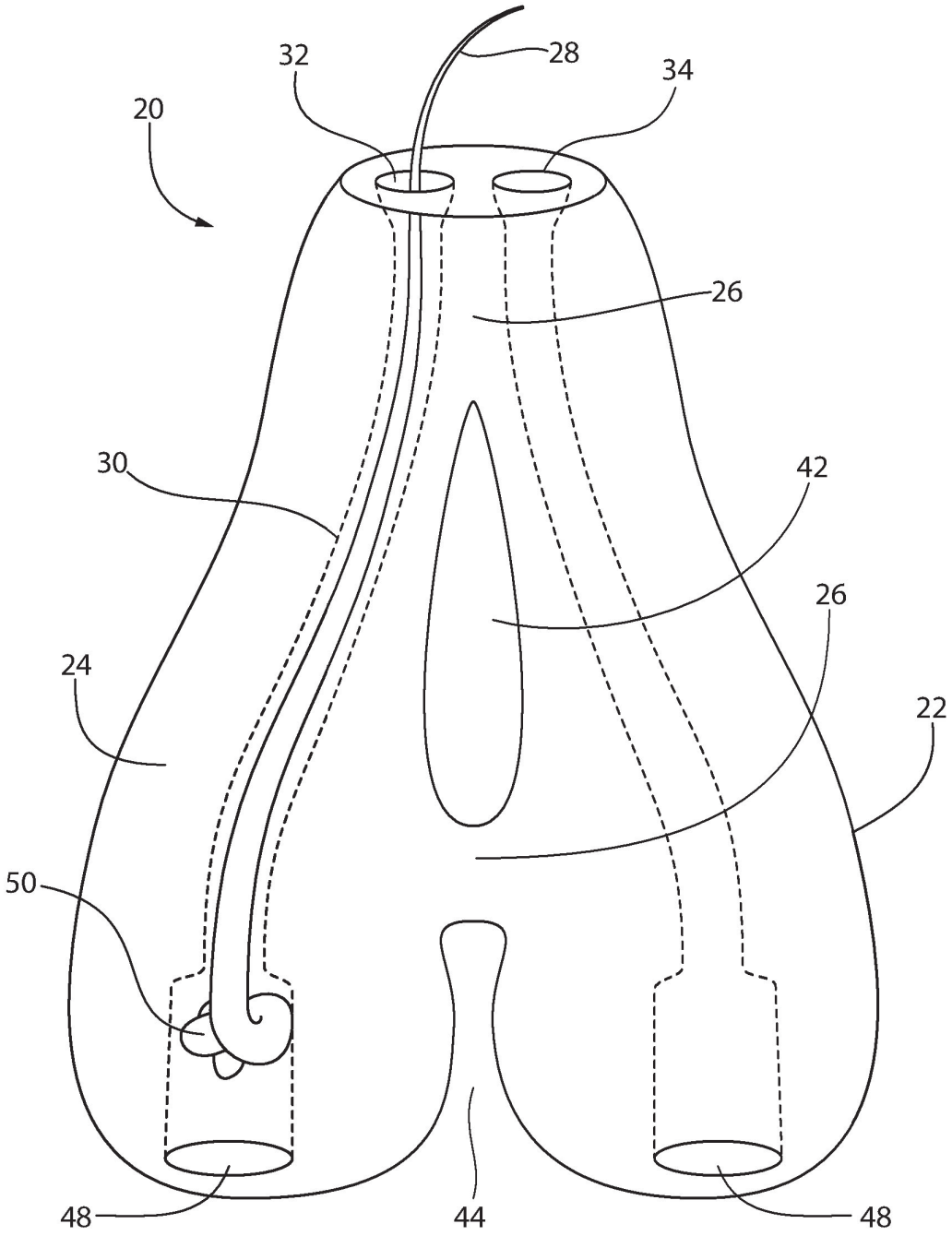

FIG. 2A

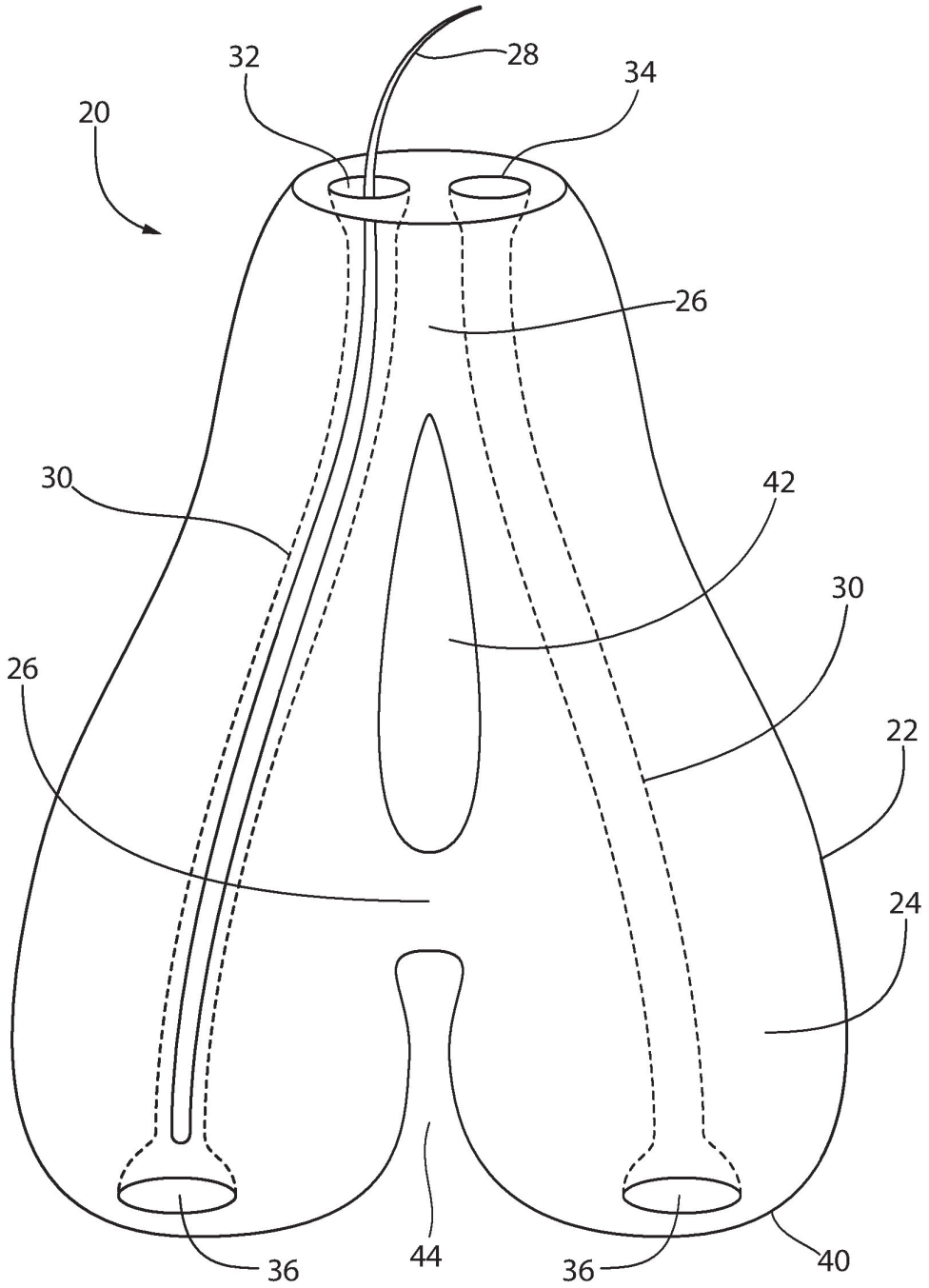

FIG. 2B

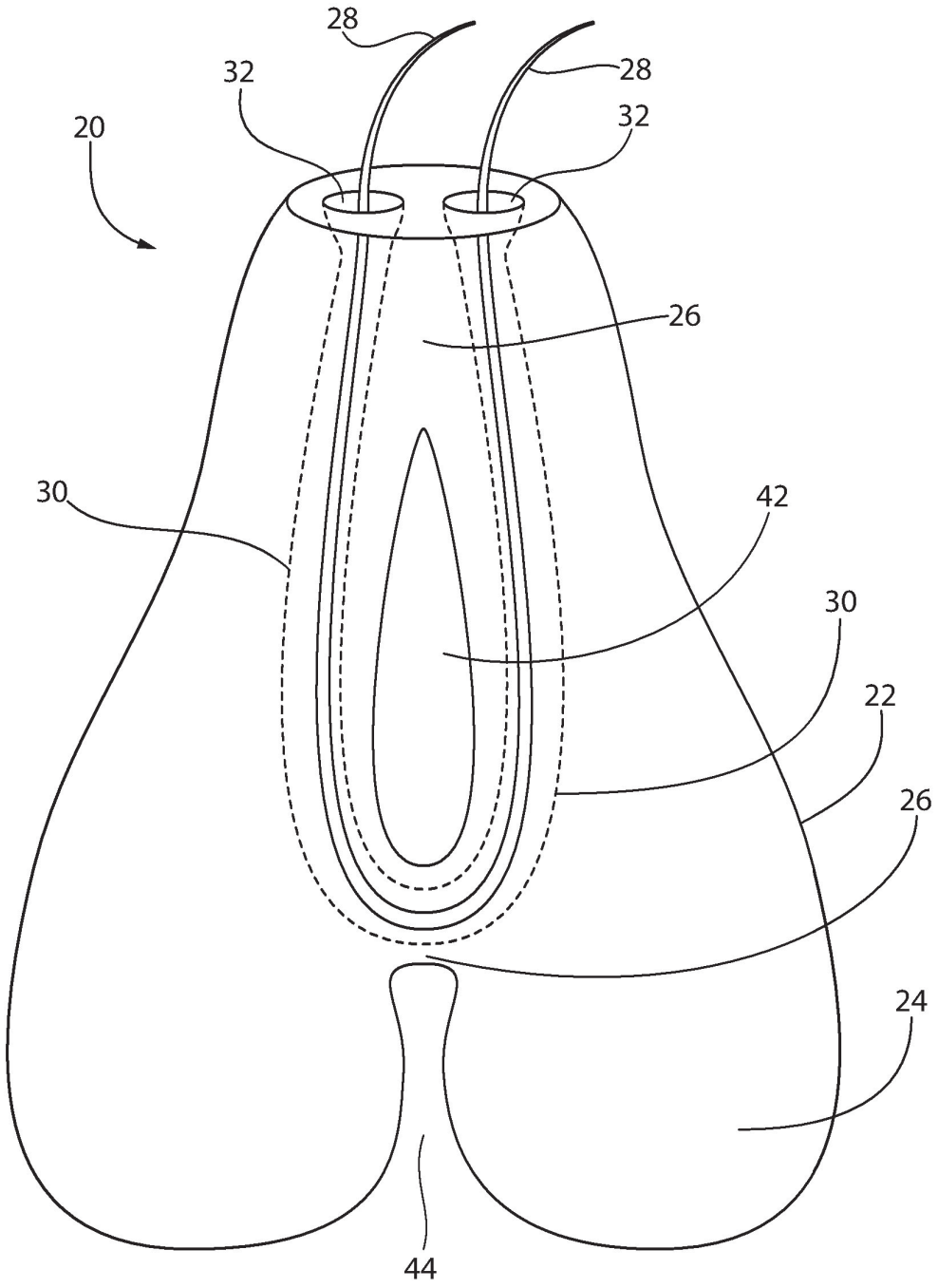

FIG. 2C

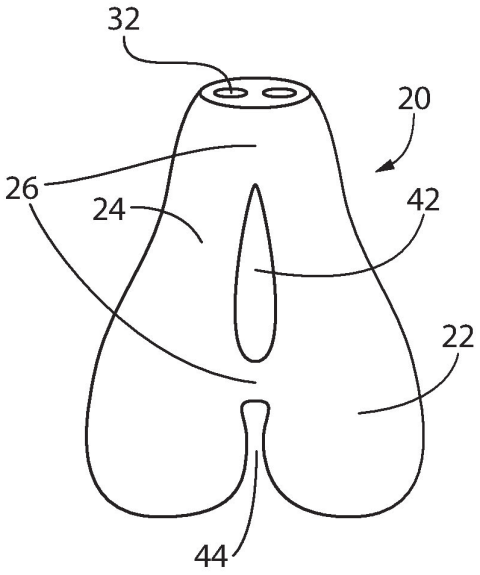

FIG. 3A

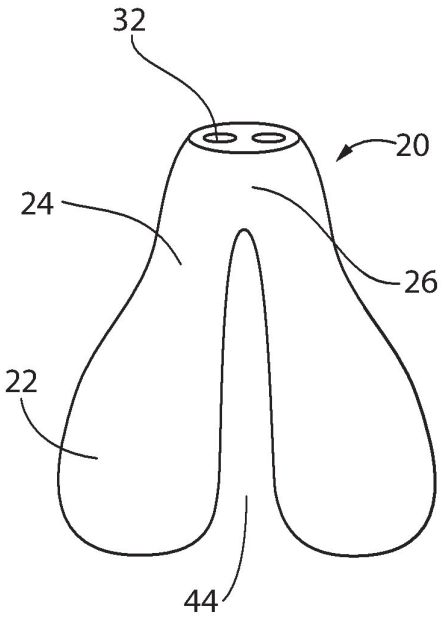

FIG. 3B

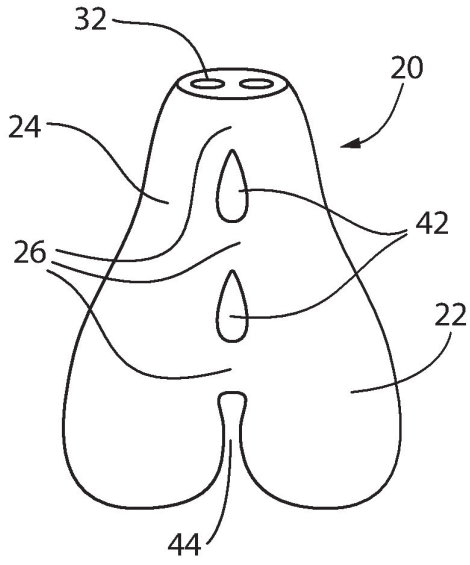

FIG. 3C

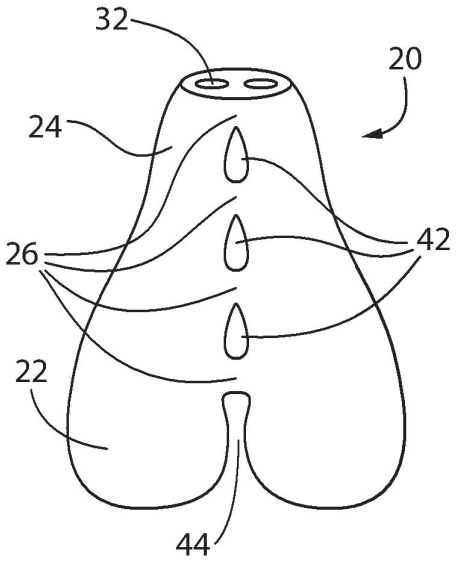

FIG. 3D

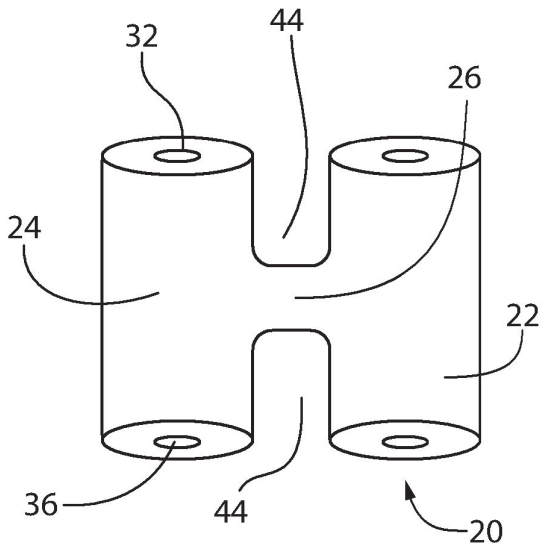

FIG. 4A

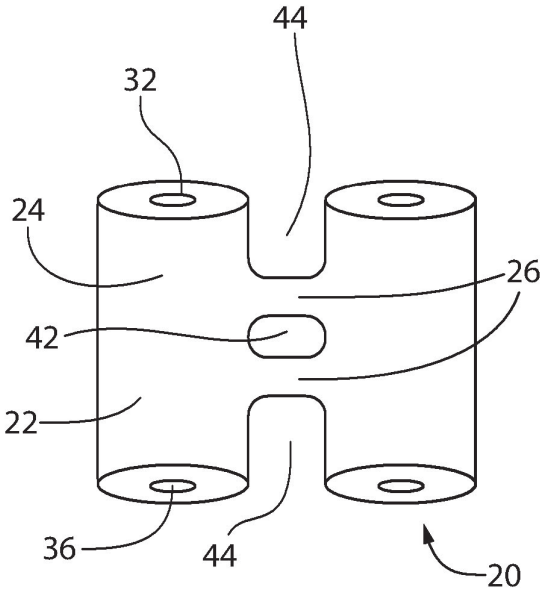

FIG. 4B

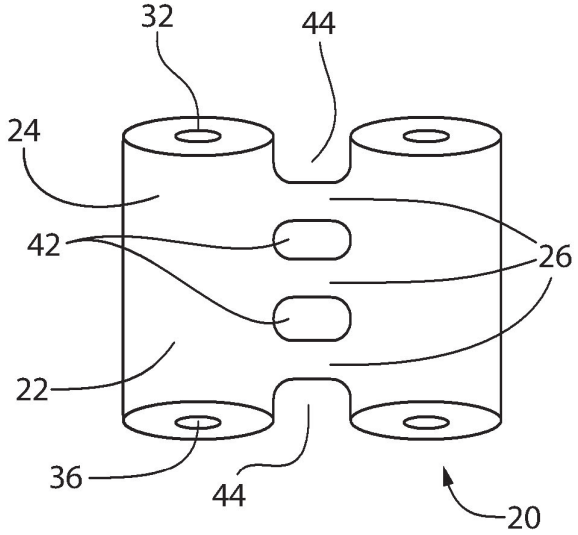

FIG. 4C

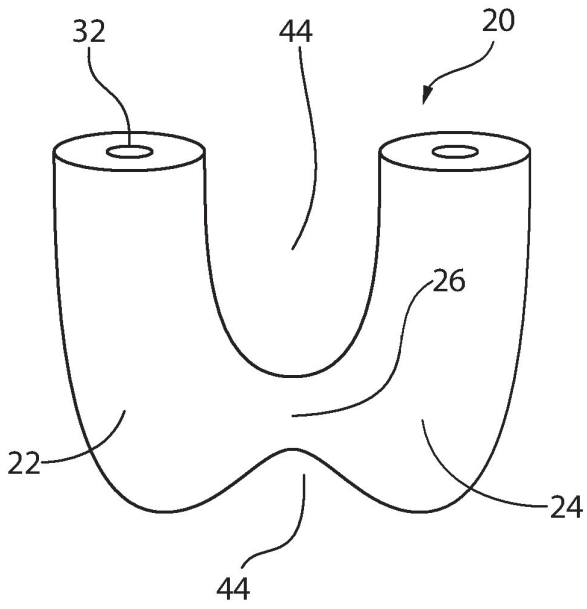

FIG. 5A

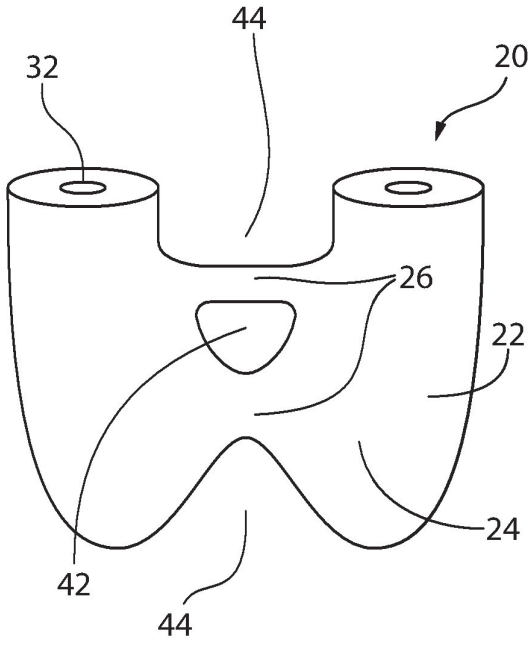

FIG. 5B

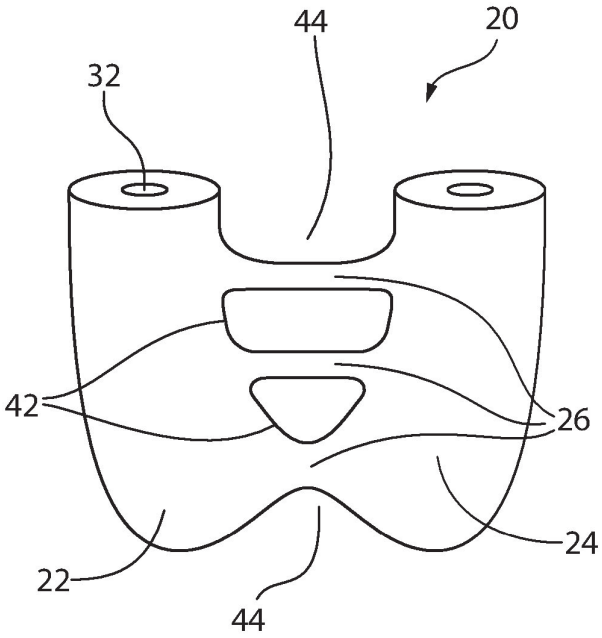

FIG. 5C

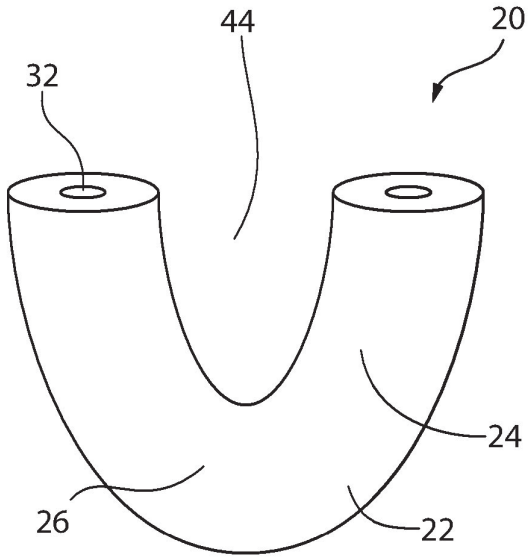

FIG. 5D

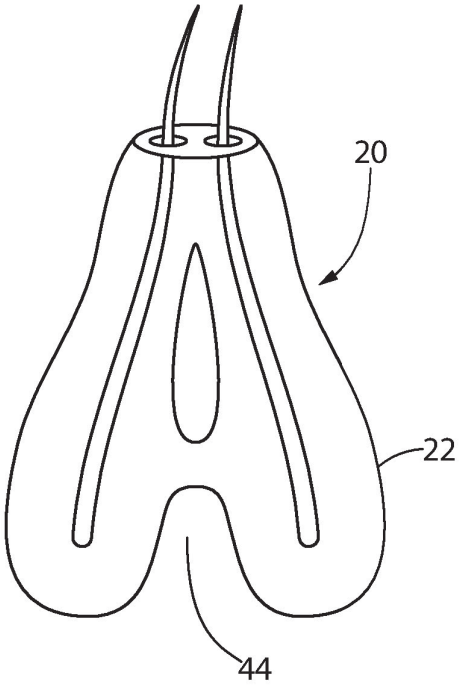

FIG. 6A

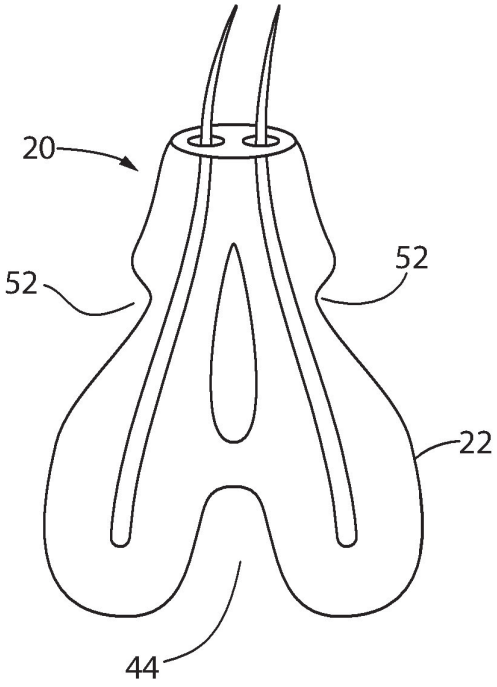

FIG. 6B

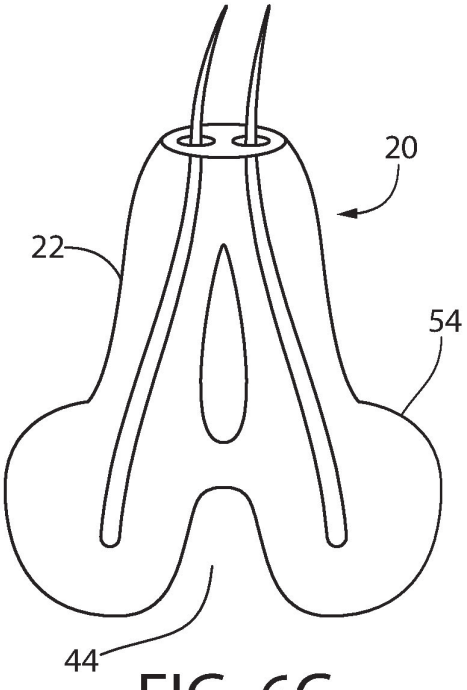

FIG. 6C

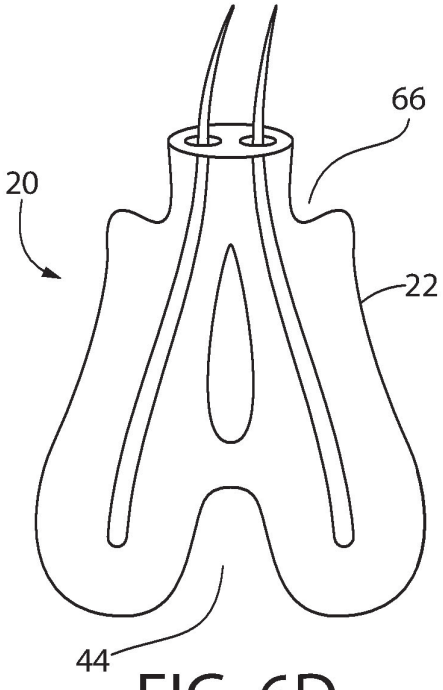

FIG. 6D

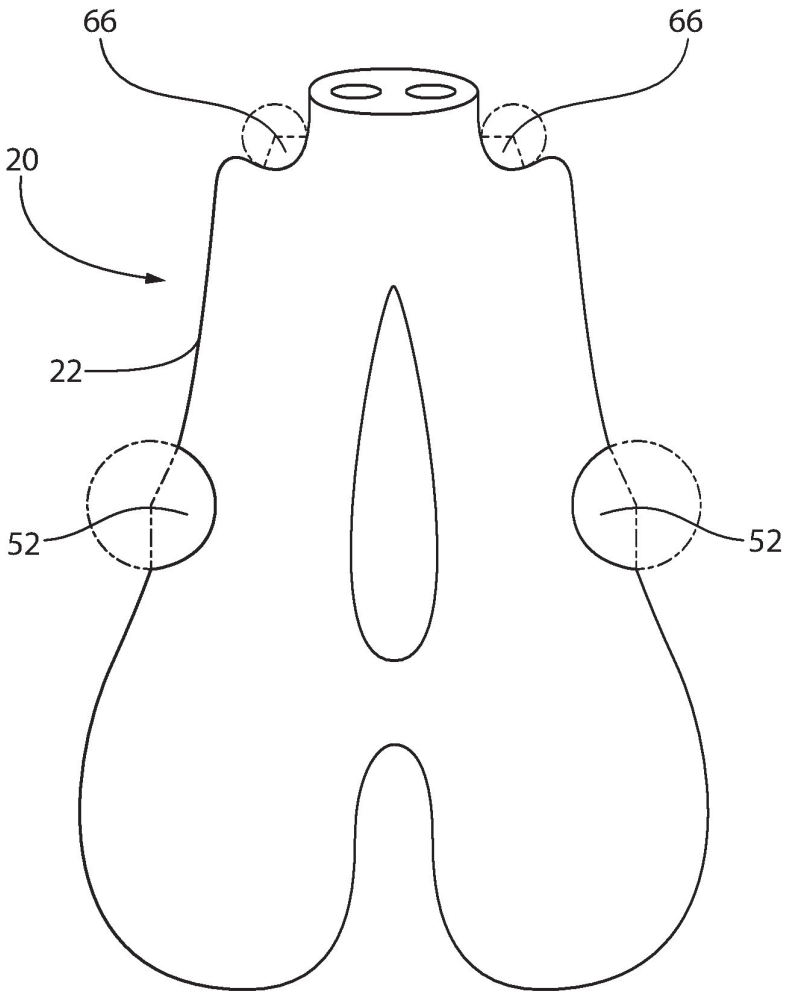

FIG. 7

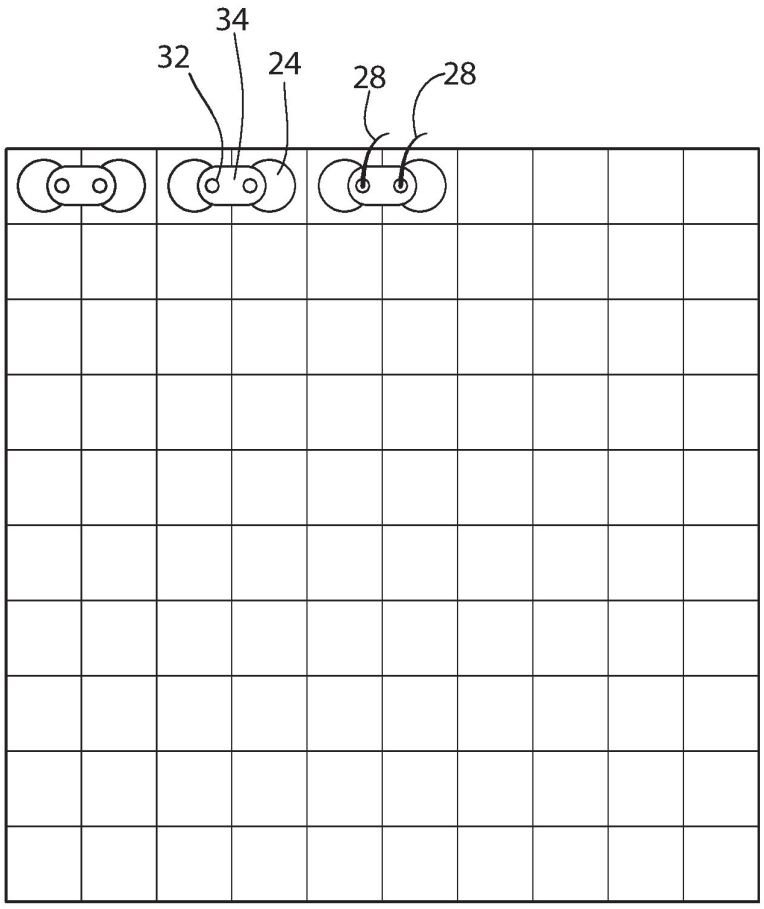

FIG. 8

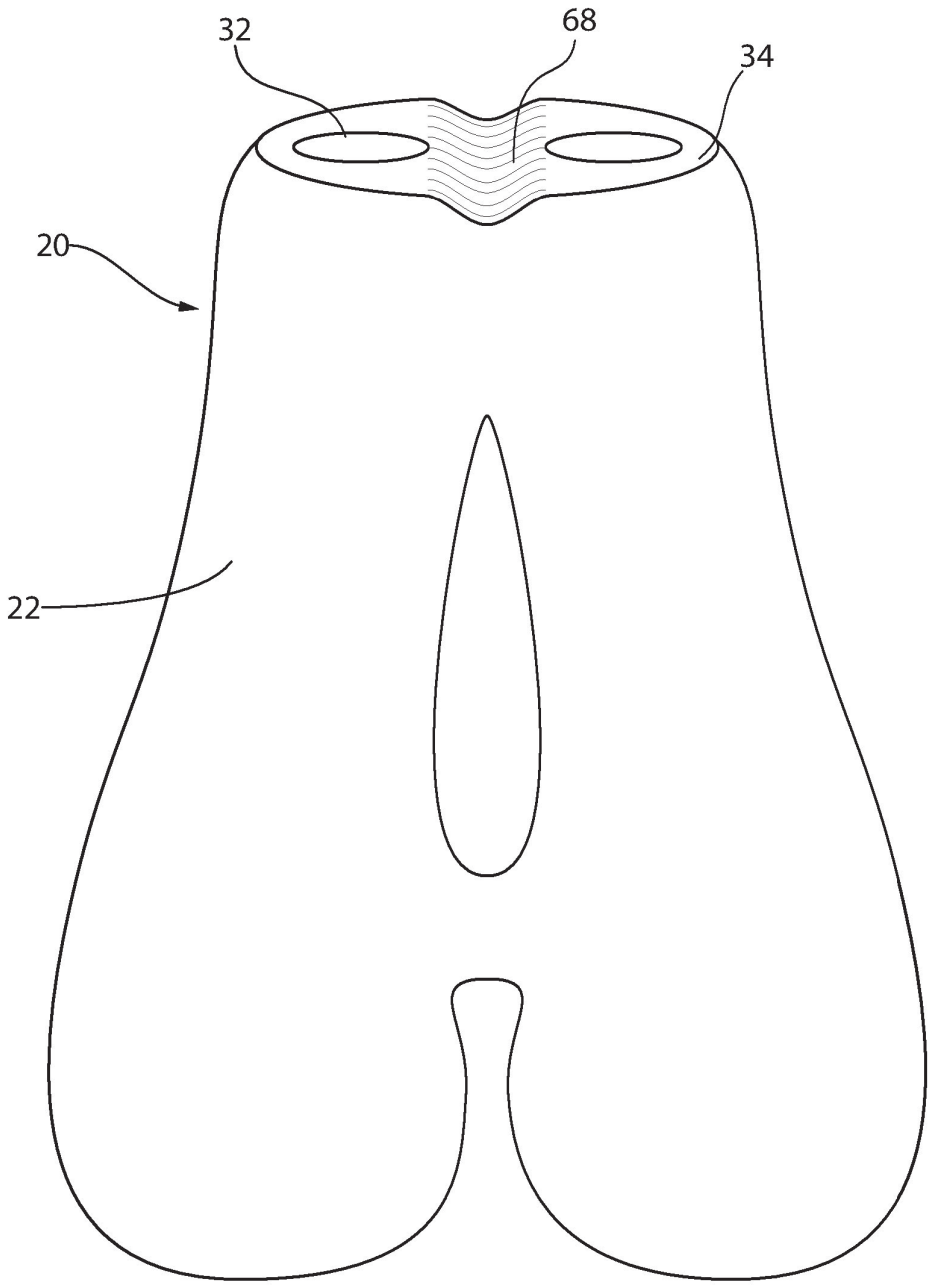

FIG. 9

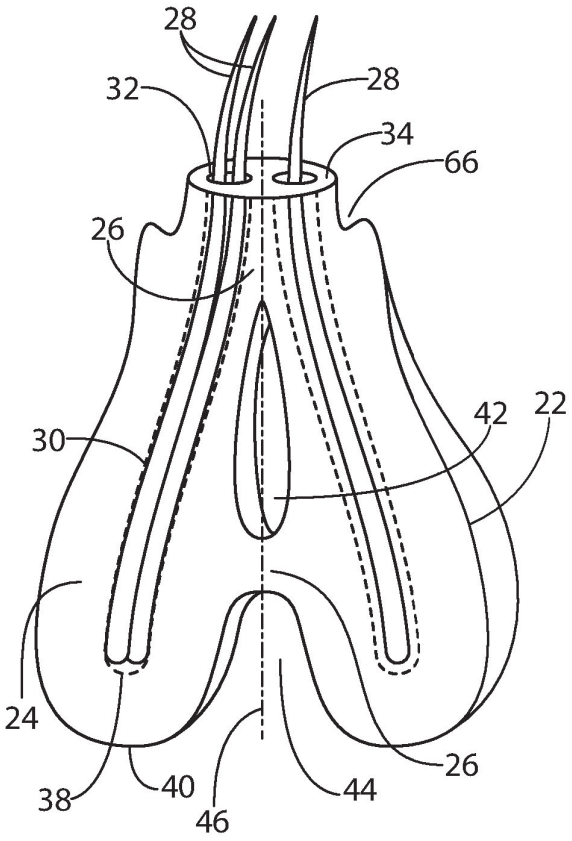

FIG. 10A

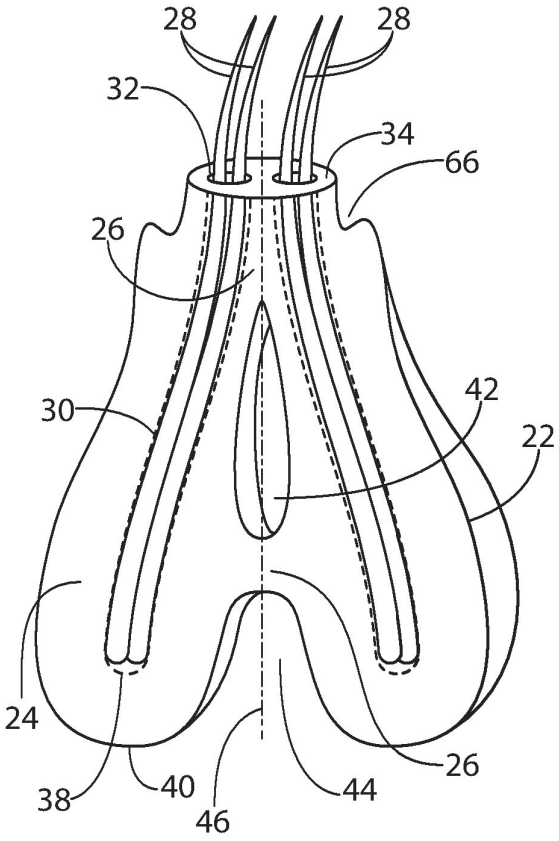

FIG. 10B

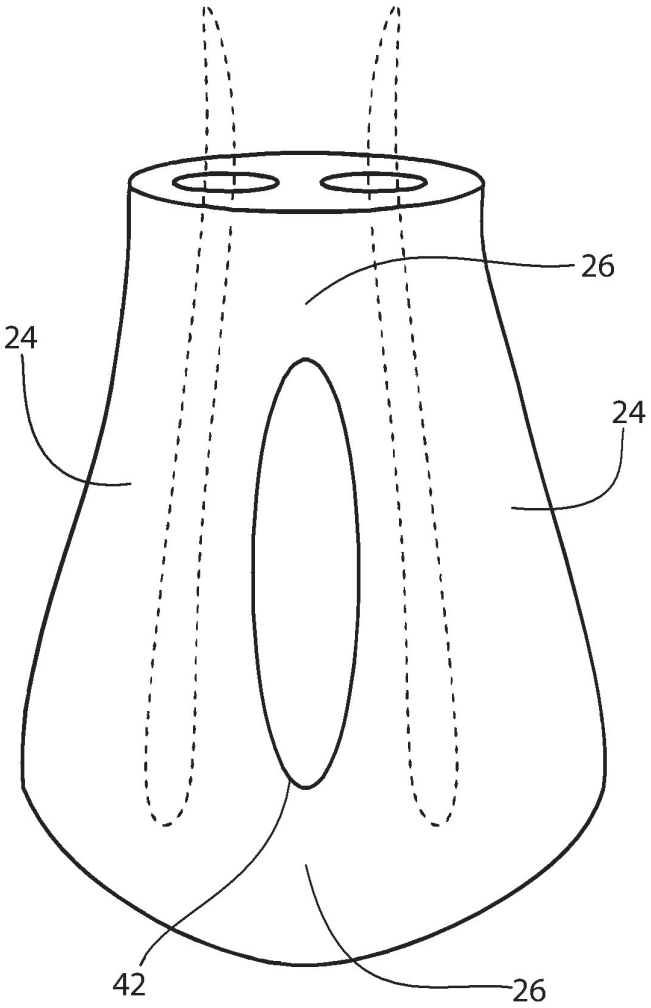

FIG. 11

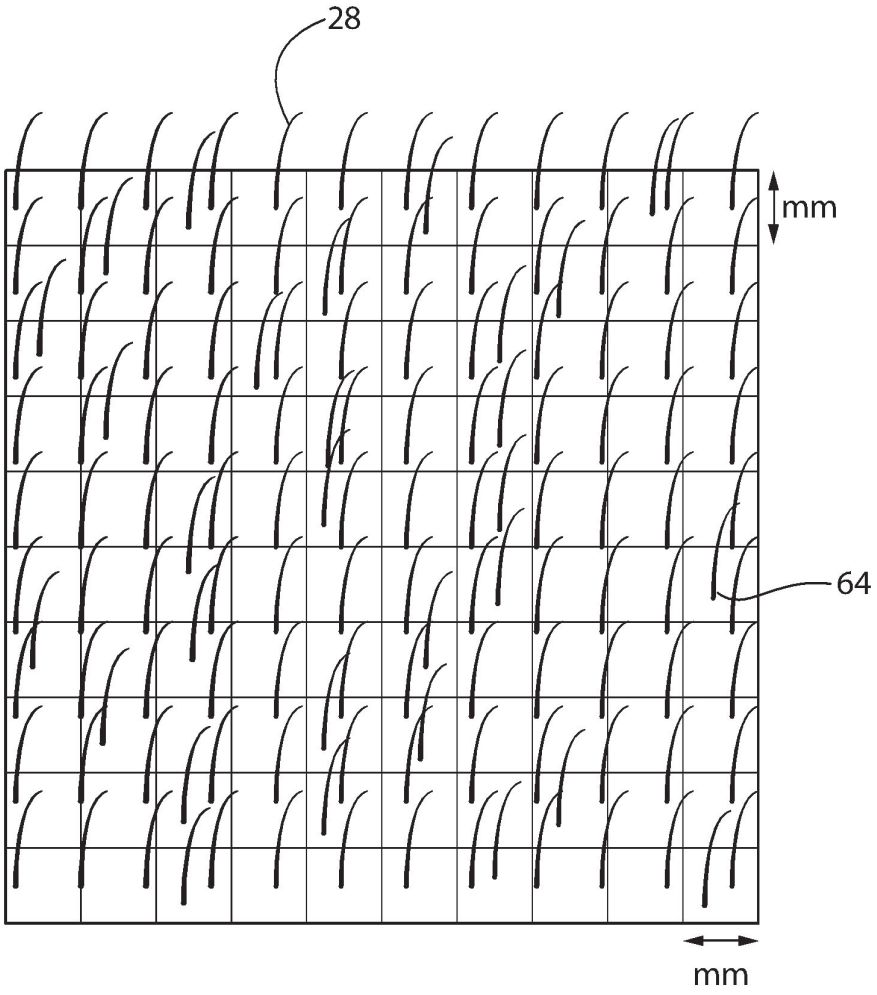

FIG. 12
(PRIOR ART)

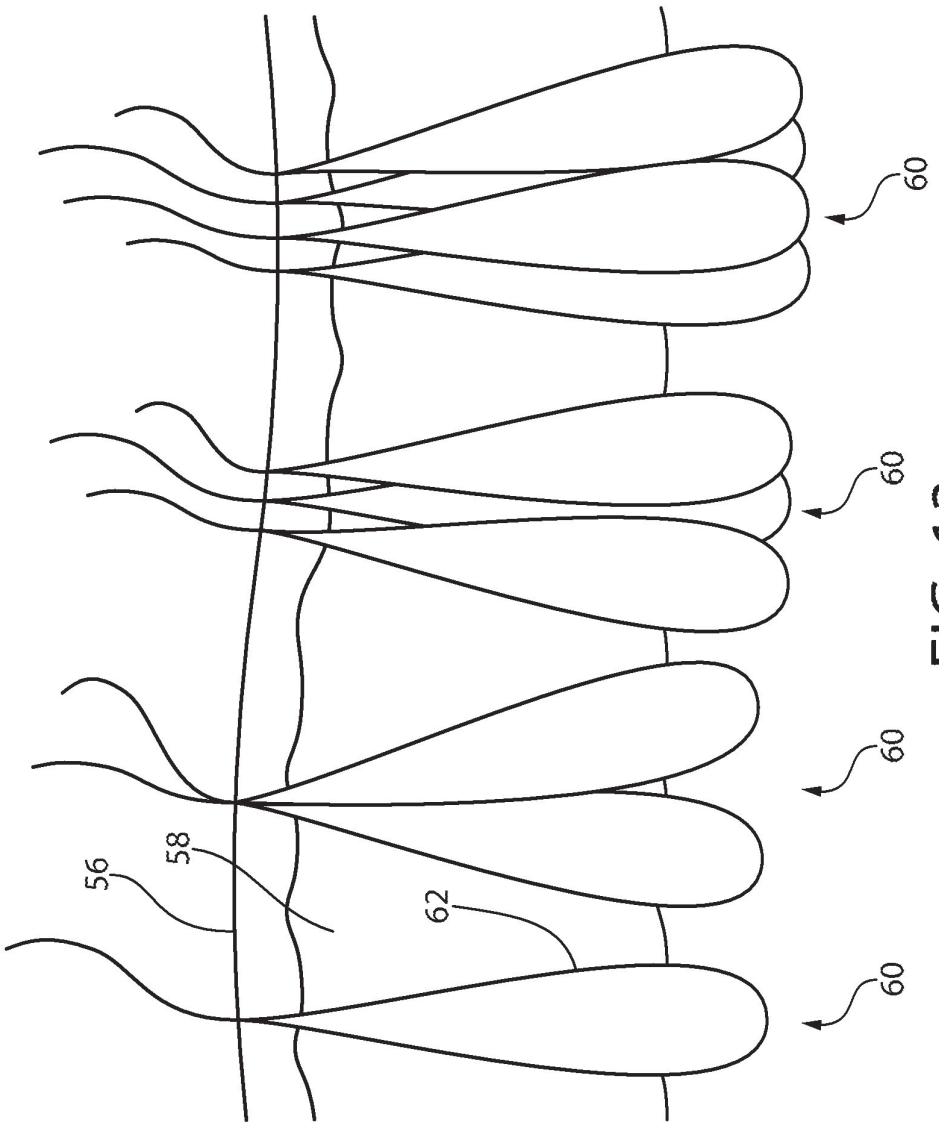

FIG. 13
(PRIOR ART)

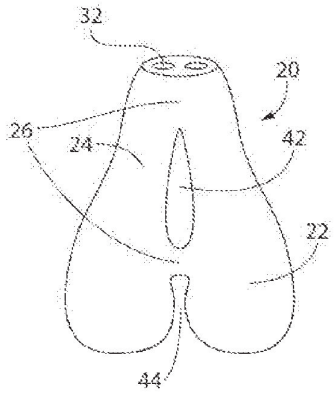

Present Invention

- Tunnel disposed in between first hair chamber and second hair chamber.
- A portion of the hair strand is encased within the respective hair chamber to the side of the tunnel, and away from the mid-line of the anchor.

FIG. 3A

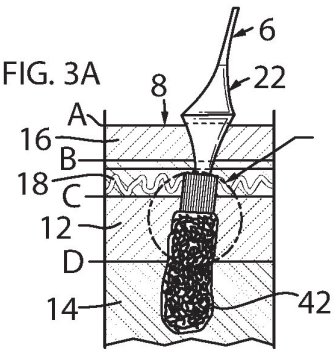

Erb Prior Art

- Reticulated polymer material surrounding hair filament.
- Erb teaches the positioning of the hair shaft directly in the middle of the anchor.
- As such, Erb teaches away from the present invention.

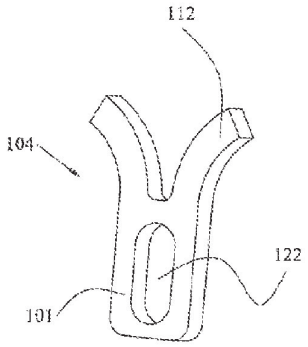

Keren Prior Art

- Two open leaves disposed above non-encasing hair slit.
- Keren teaches the positioning of the hair shaft directly in the middle of the anchor.
- As such, Keren teaches away from the present invention.

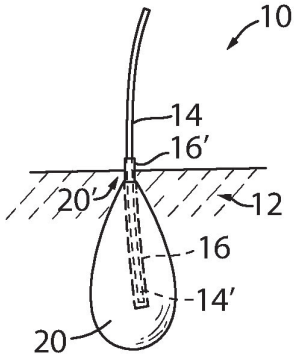

Laghi Prior Art

- Silicone follicle encapsulating end of hair shaft.
- Laghi teaches the positioning of the hair shaft directly in the middle of the anchor.
- As such, Laghi teaches away from the present invention.

FIG. 14

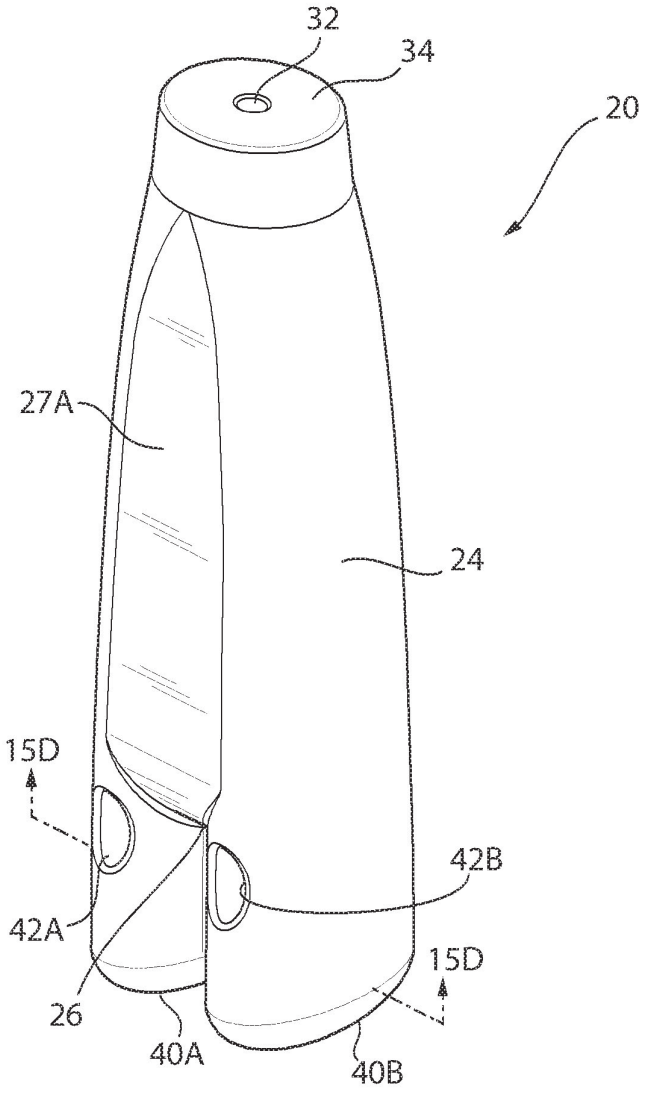

FIG. 15A

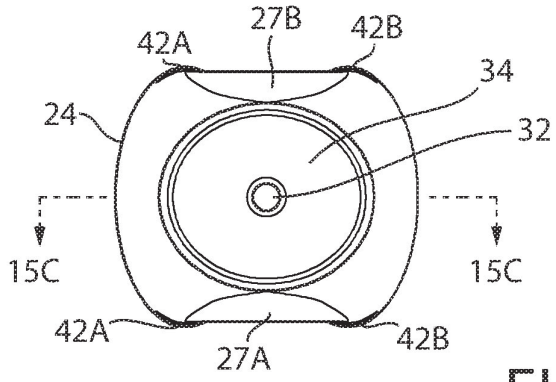

FIG. 15B

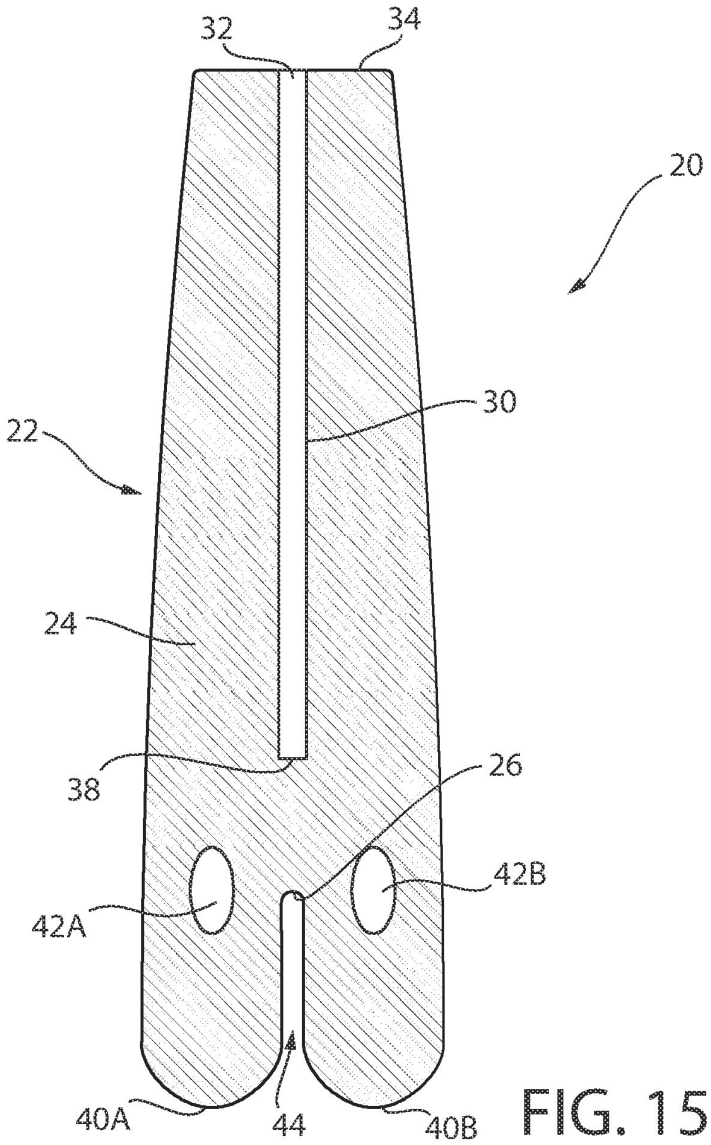

FIG. 15C

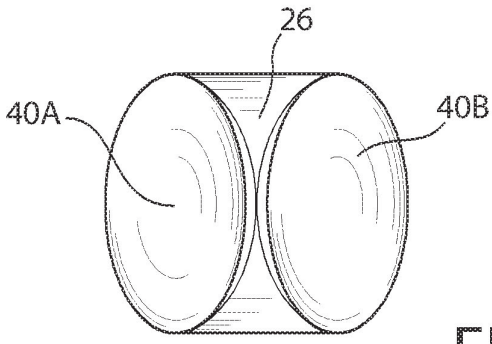

FIG. 15D

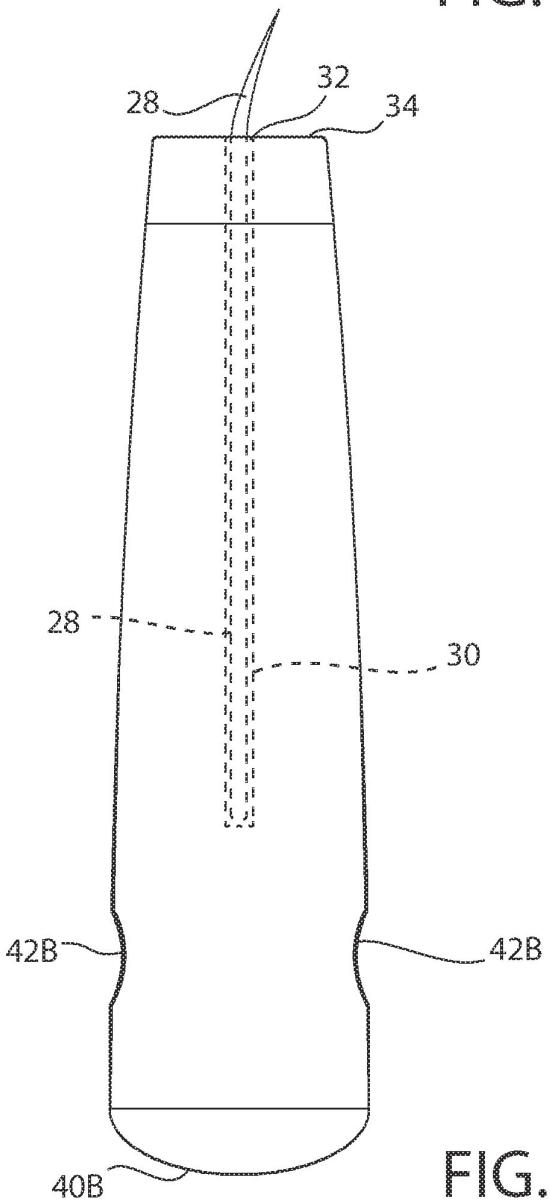

FIG. 15E



FIG. 16A

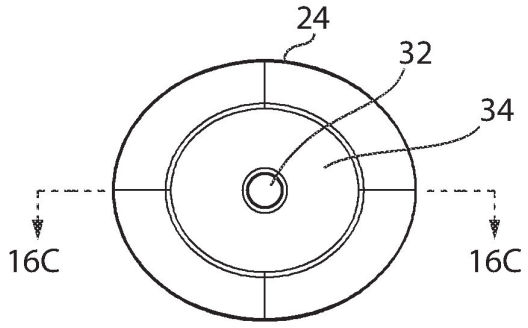

FIG. 16B

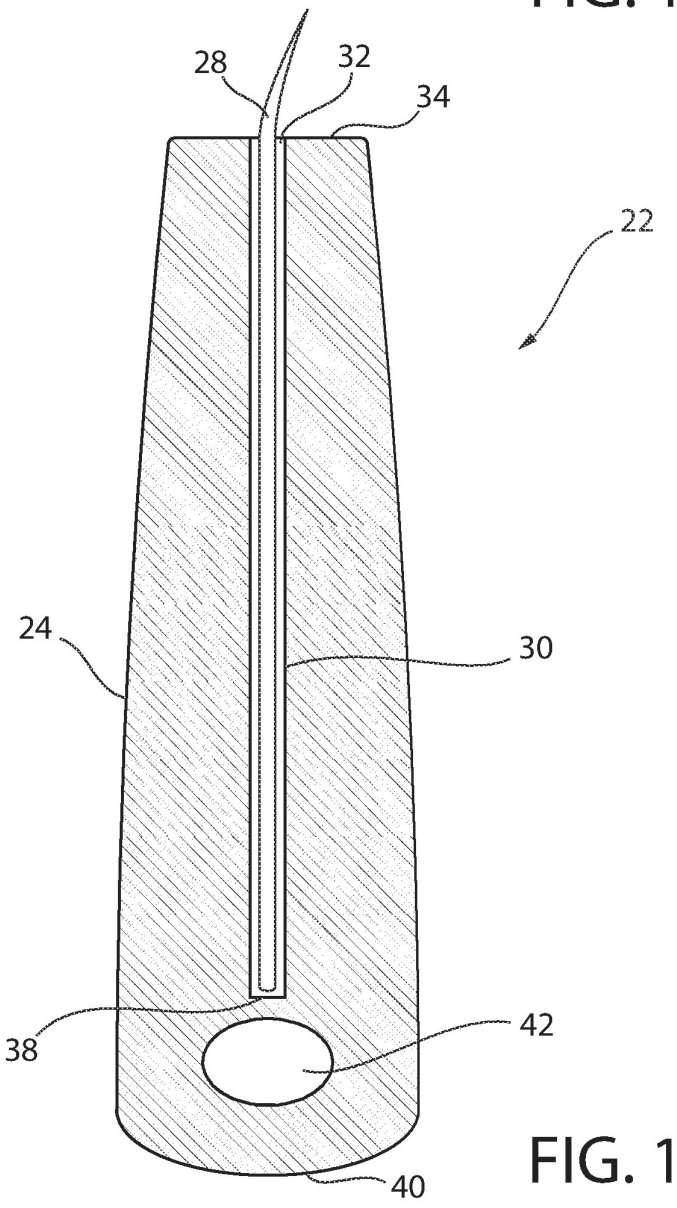

FIG. 16C

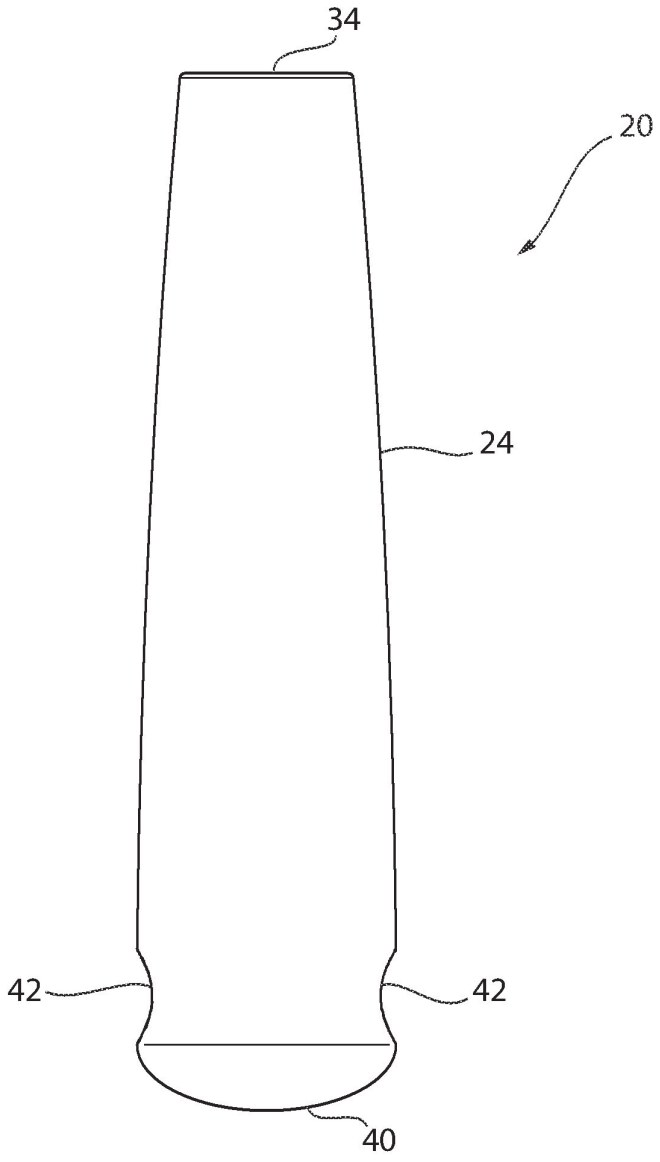

FIG. 16D

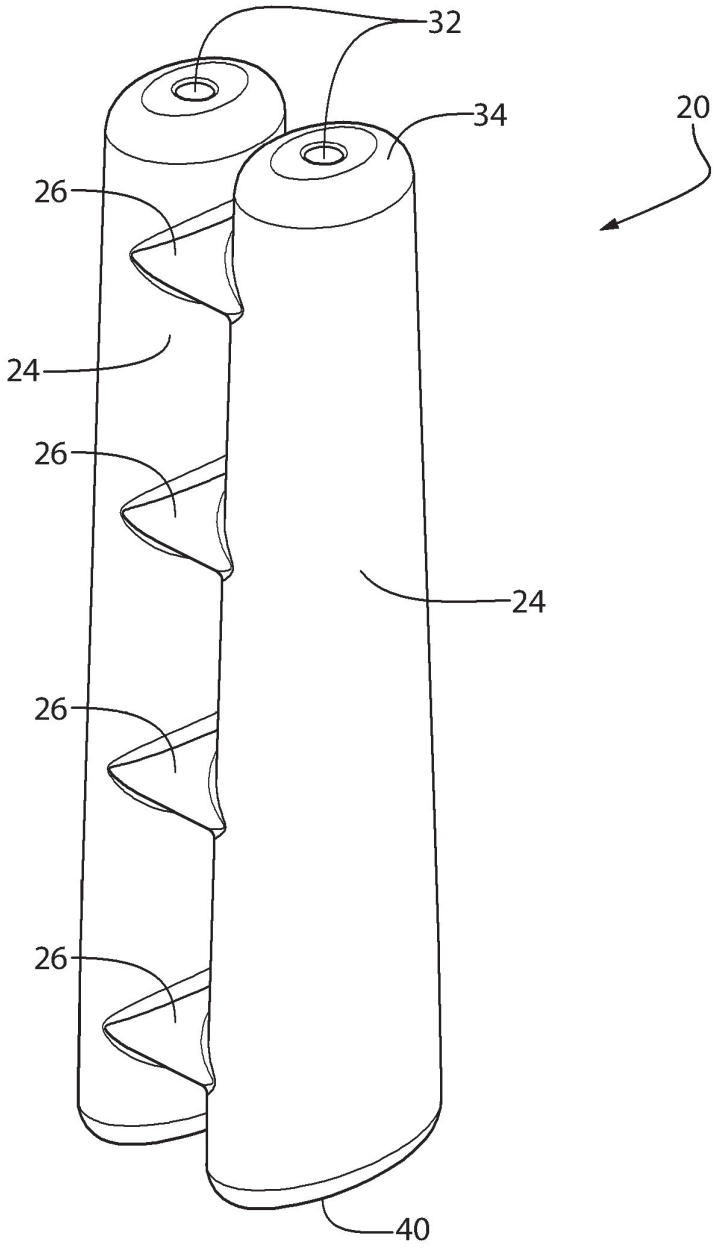

FIG. 17A

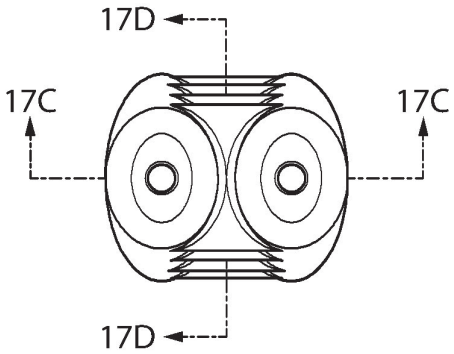

FIG. 17B

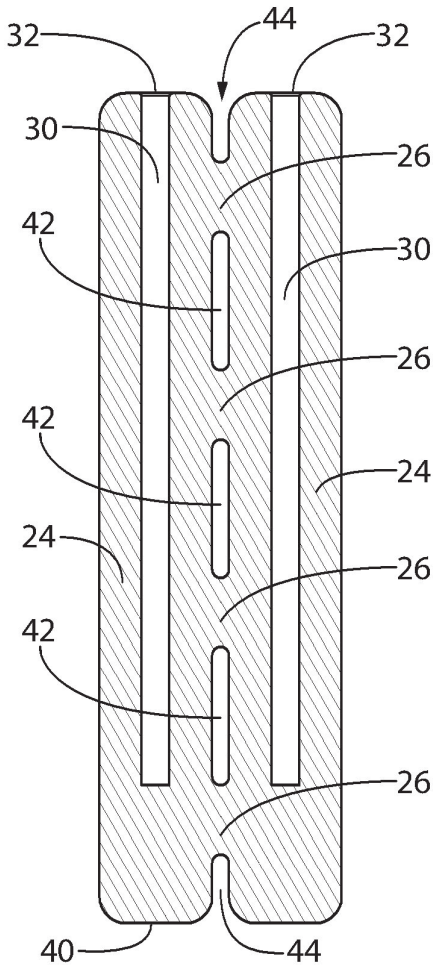

FIG. 17C

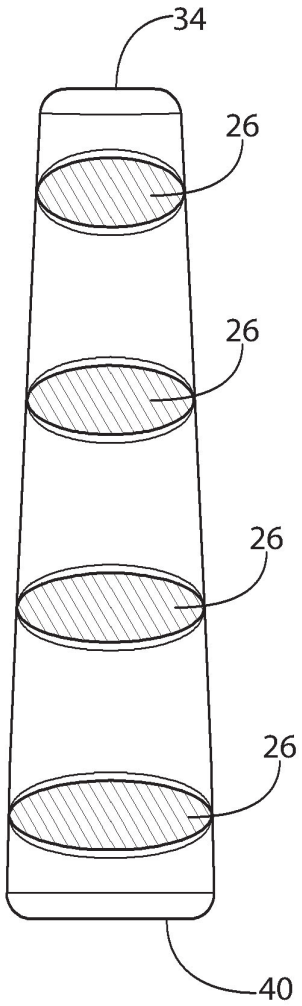

FIG. 17D

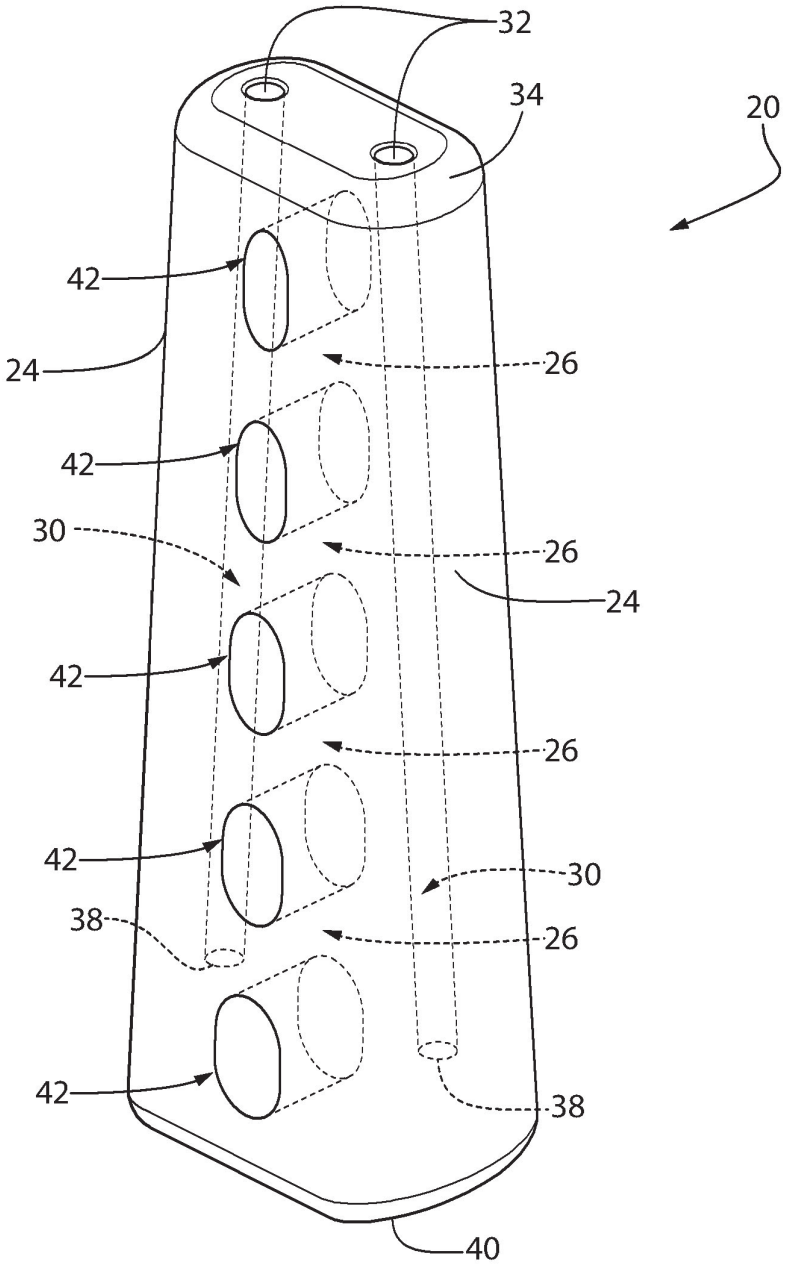

FIG. 18

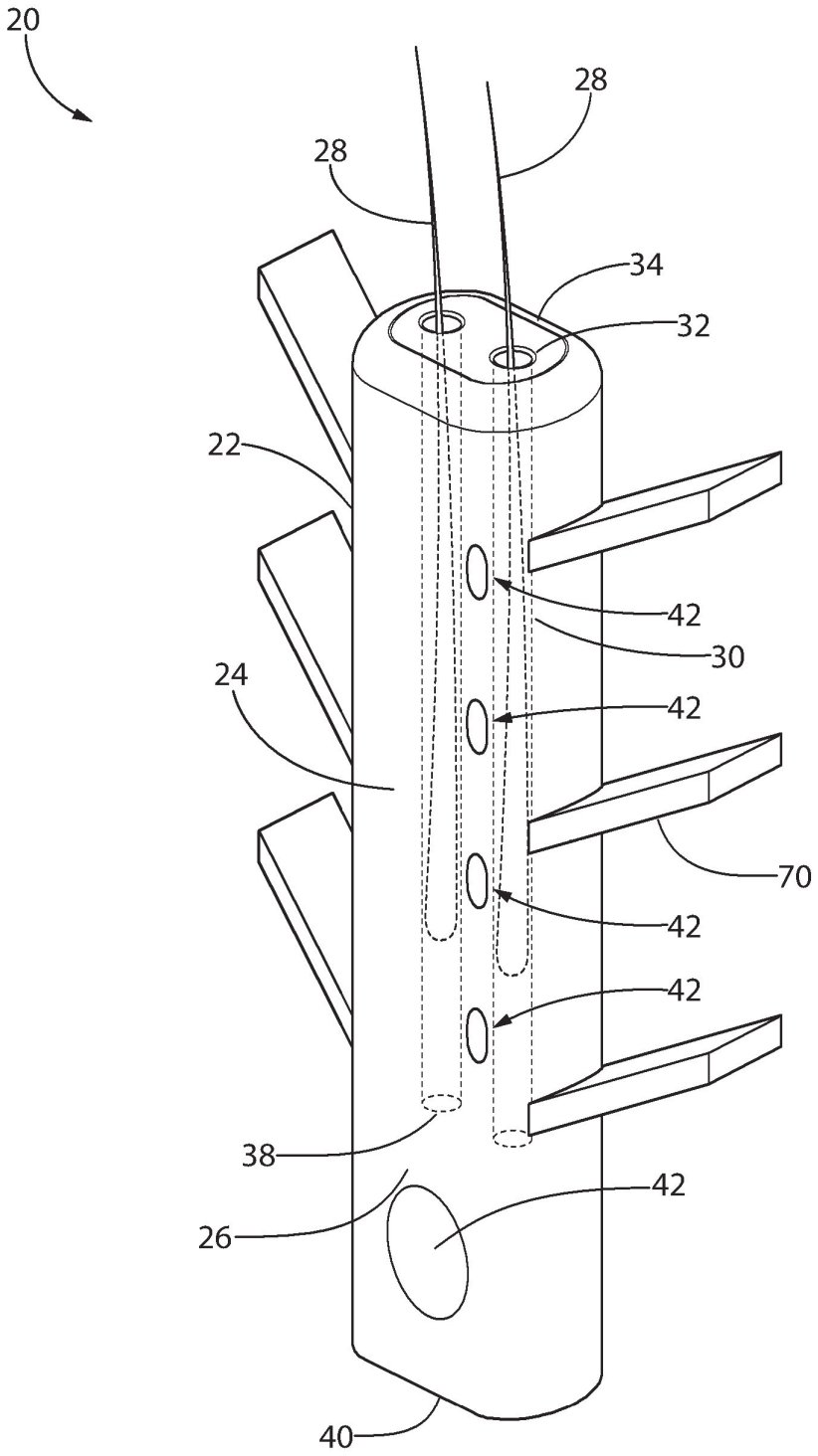

FIG. 19

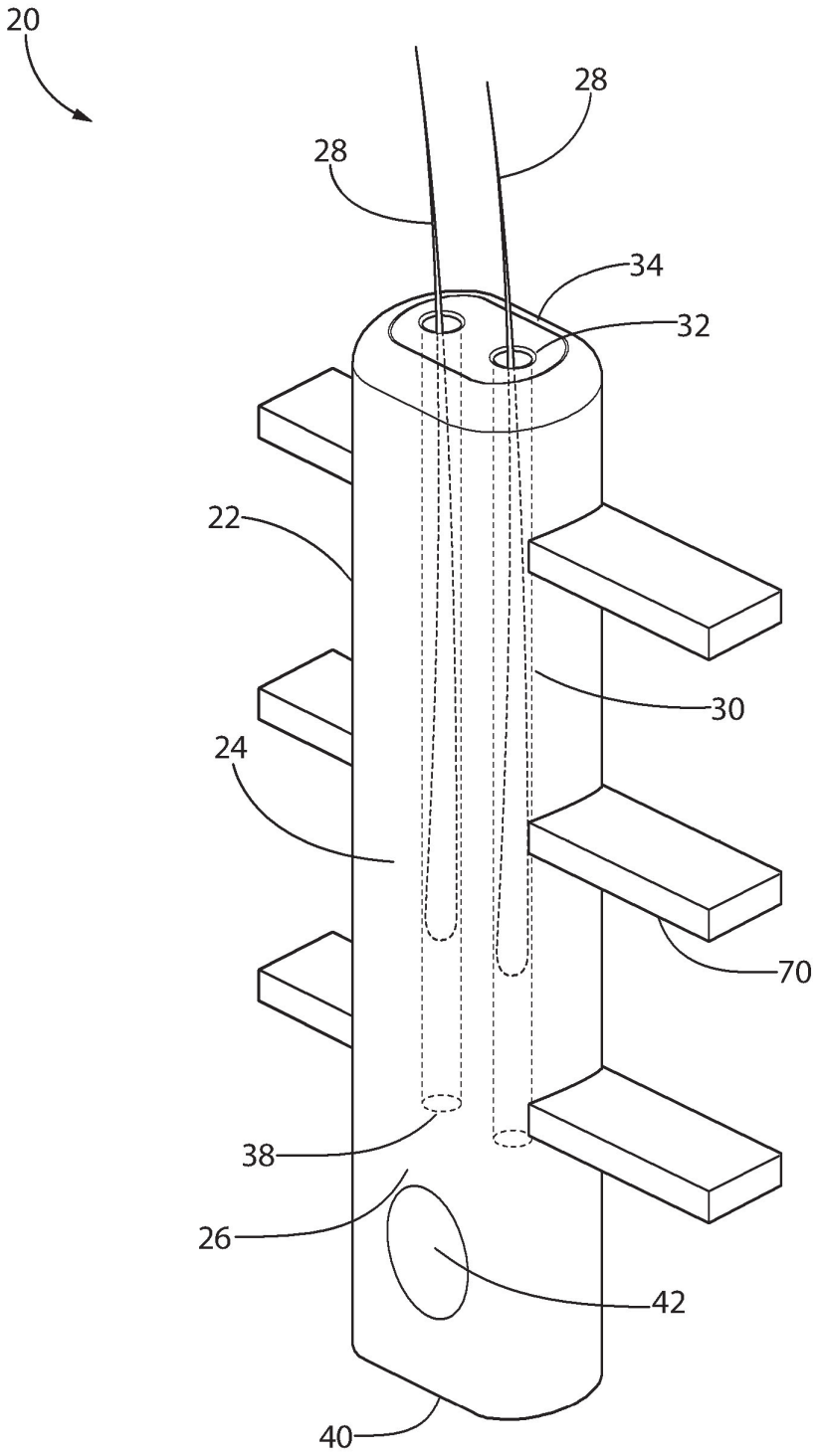

FIG. 20

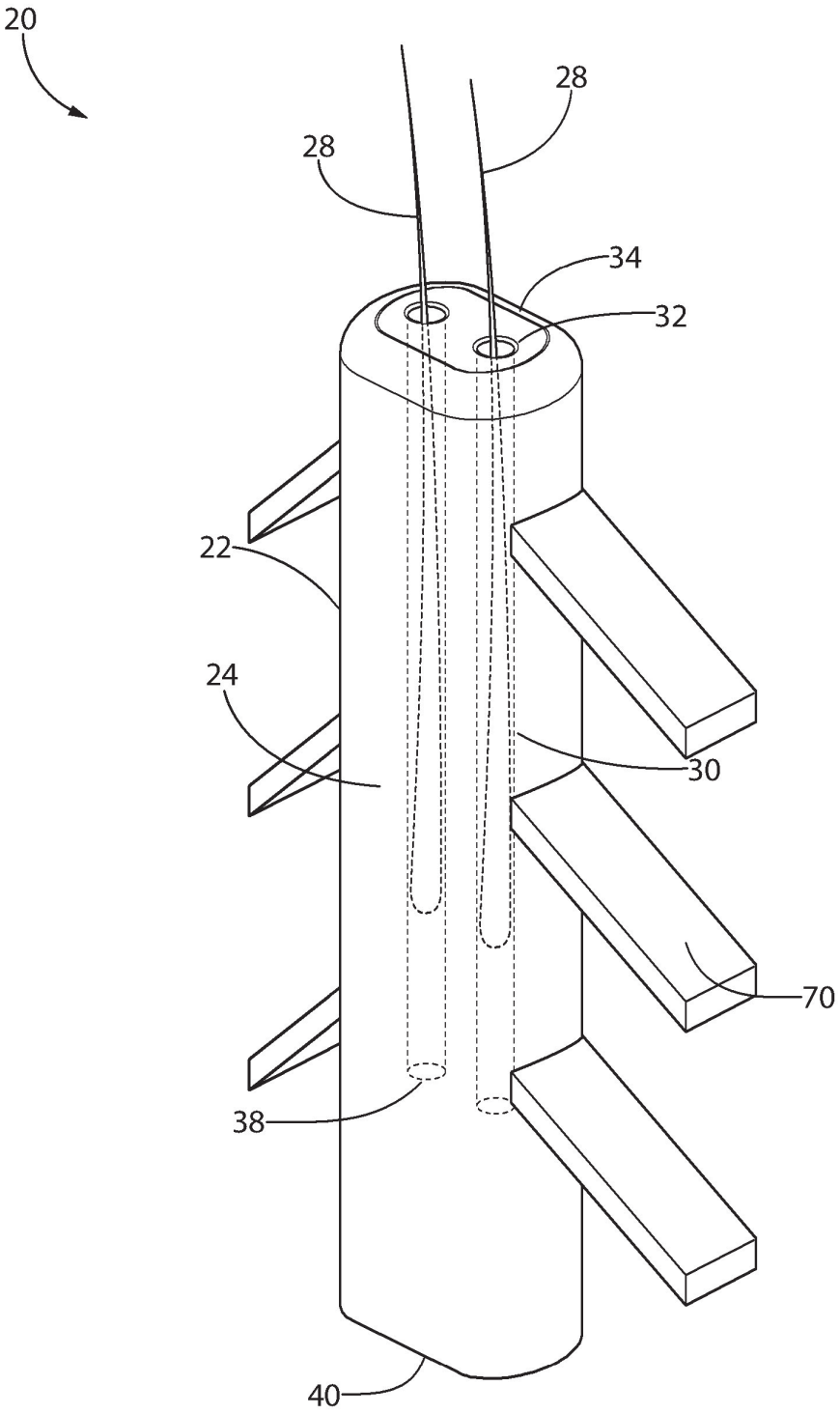

FIG. 21

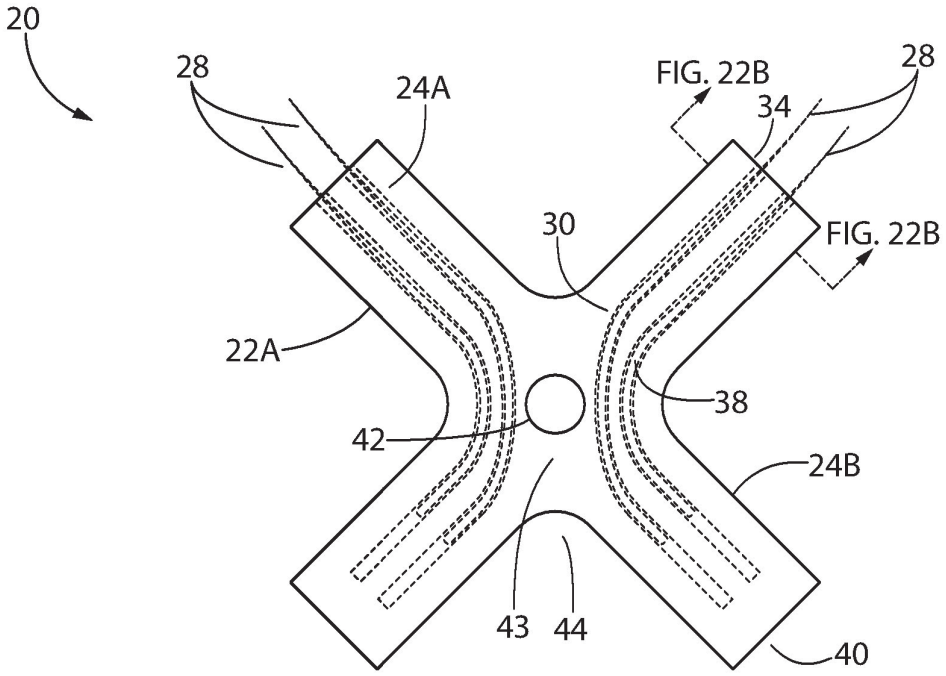

FIG. 22A

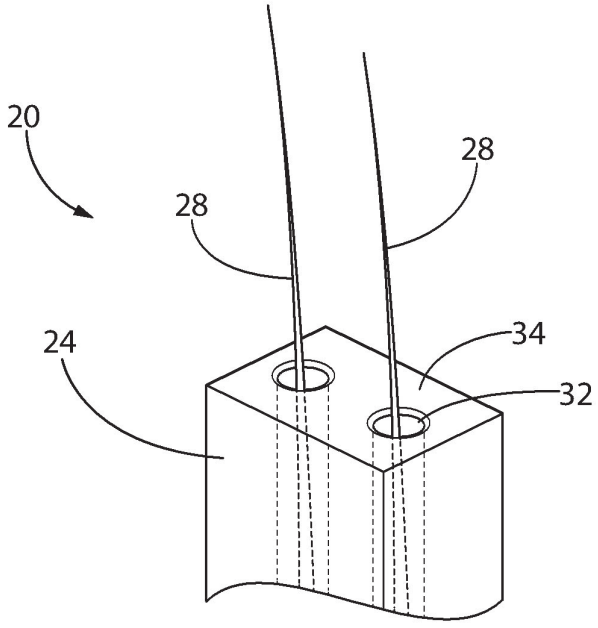

FIG. 22B

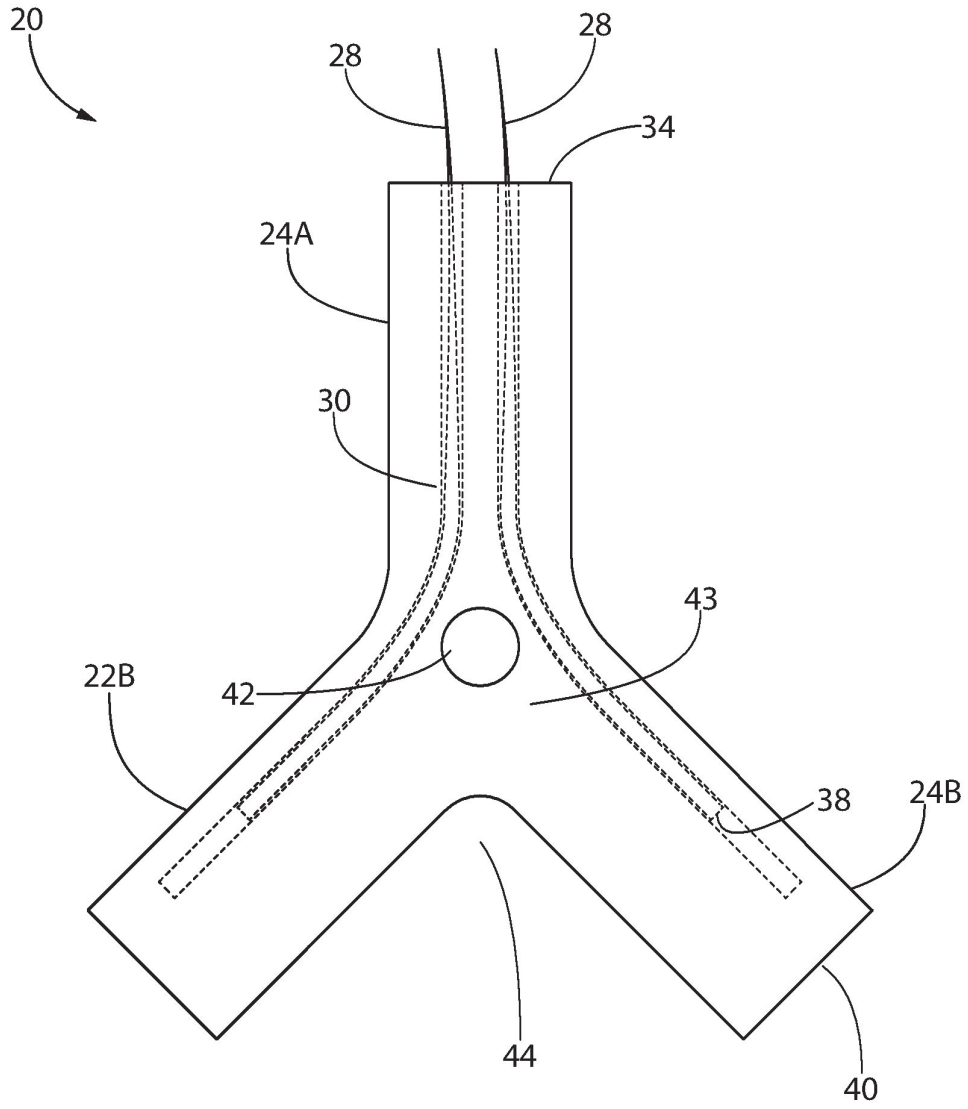

FIG. 23

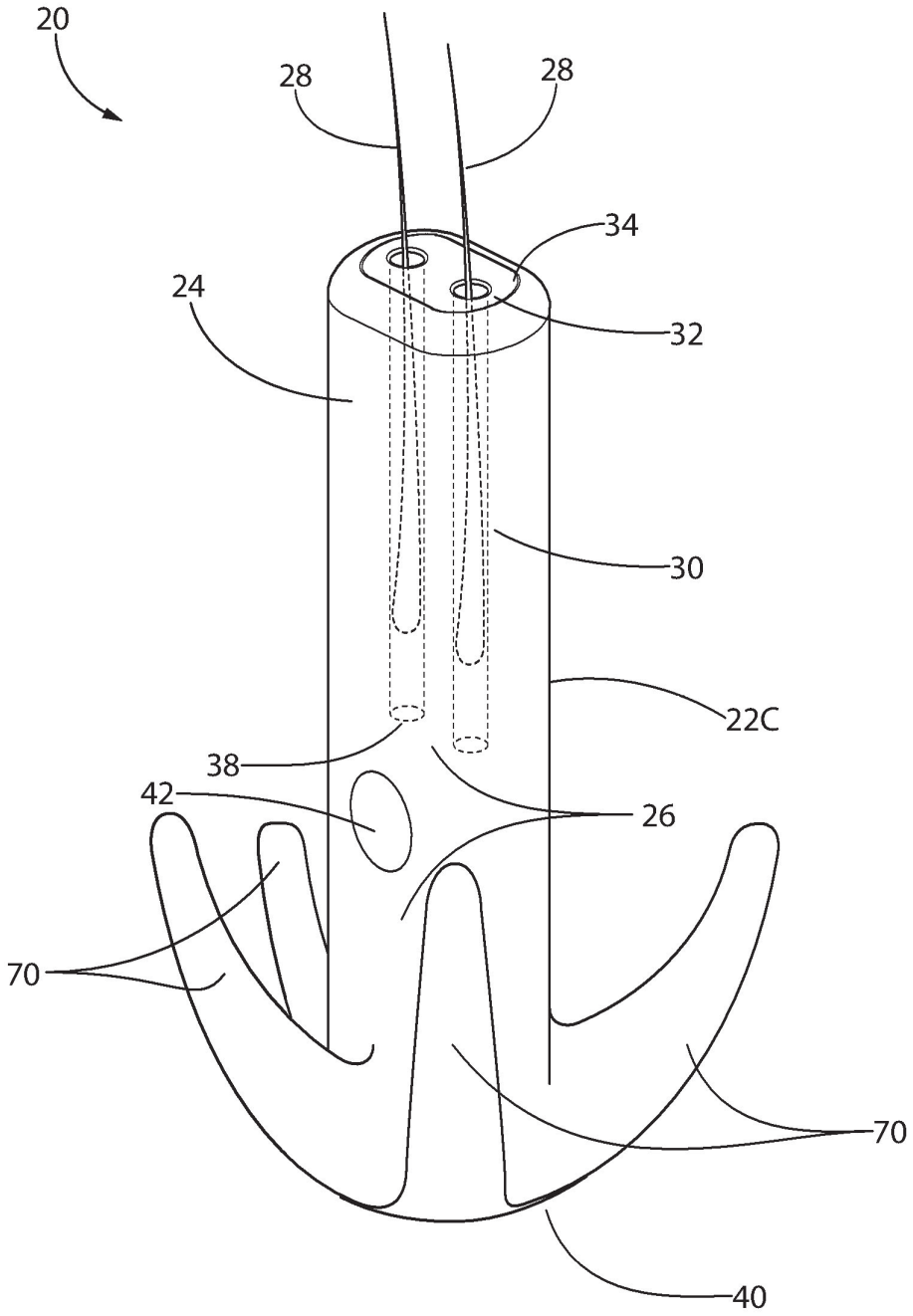

FIG. 24

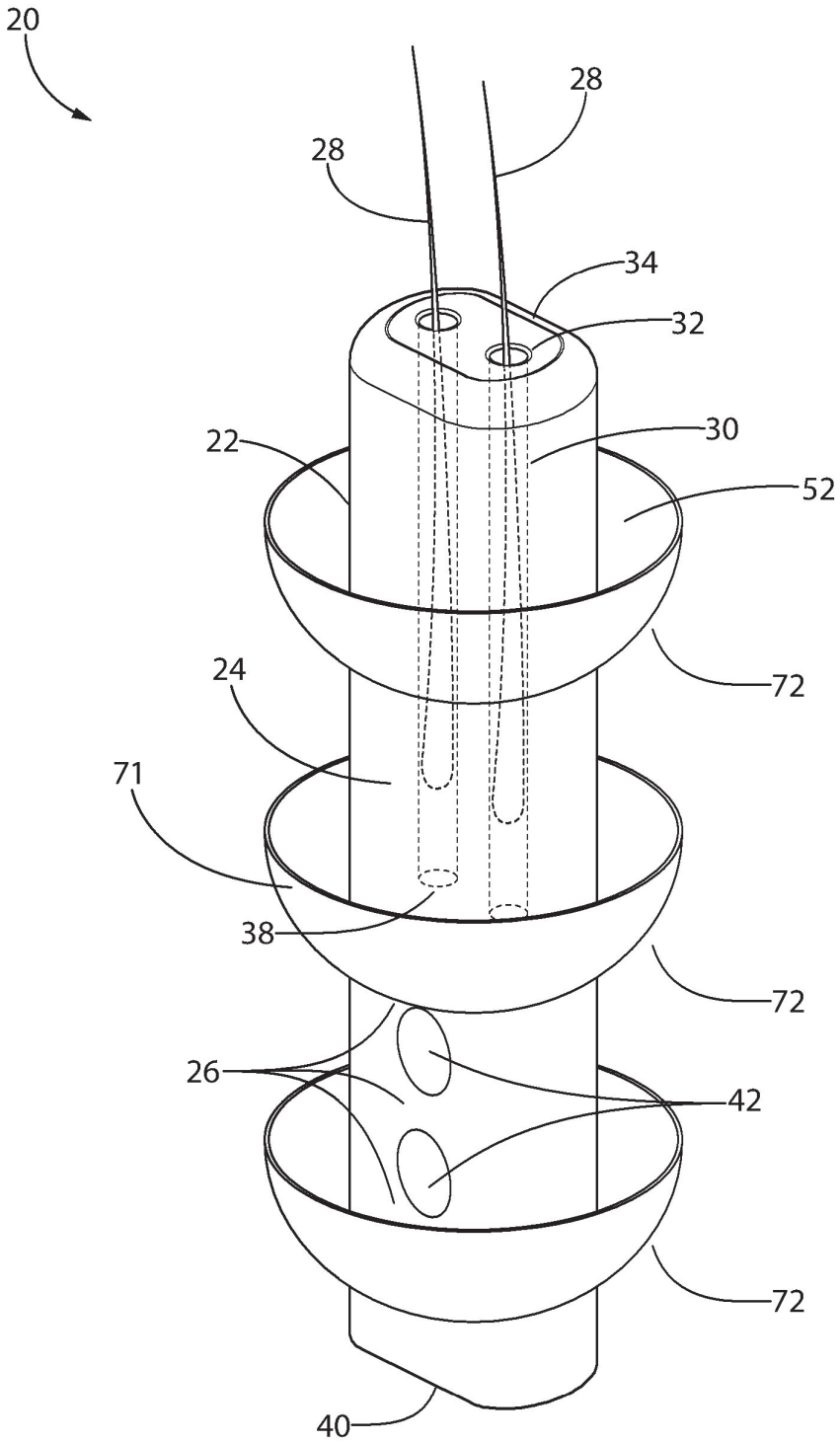

FIG. 25

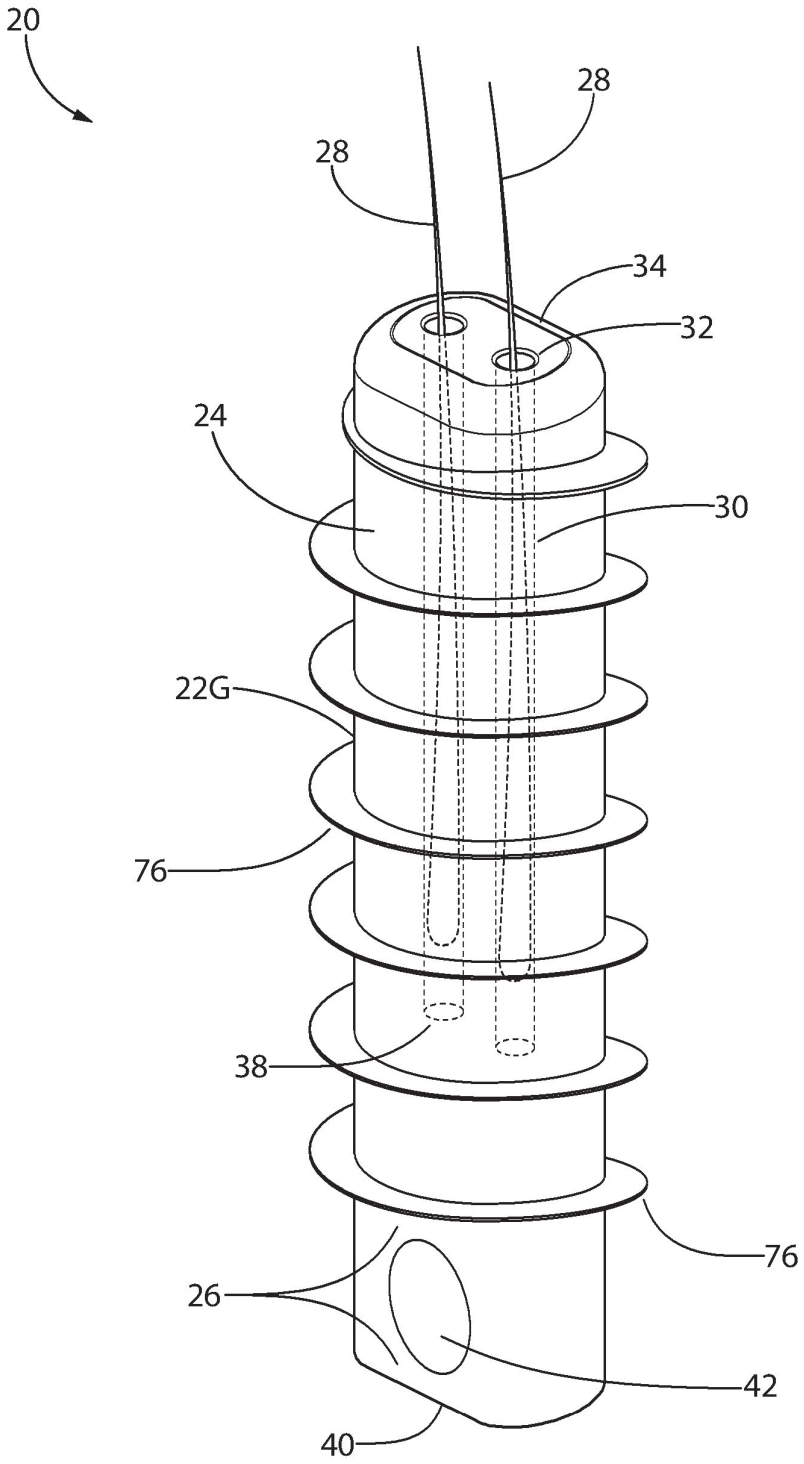

FIG. 26

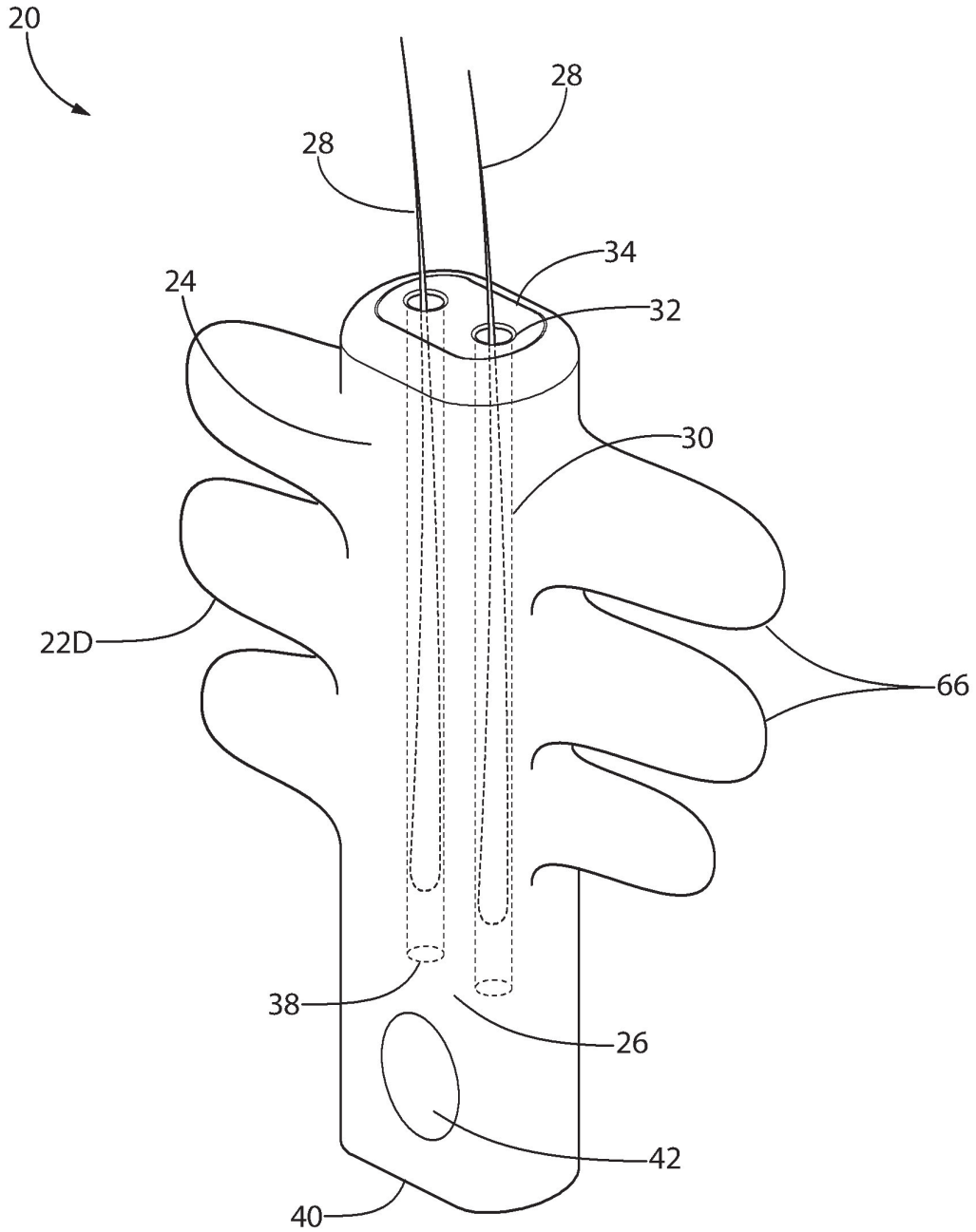

FIG. 27

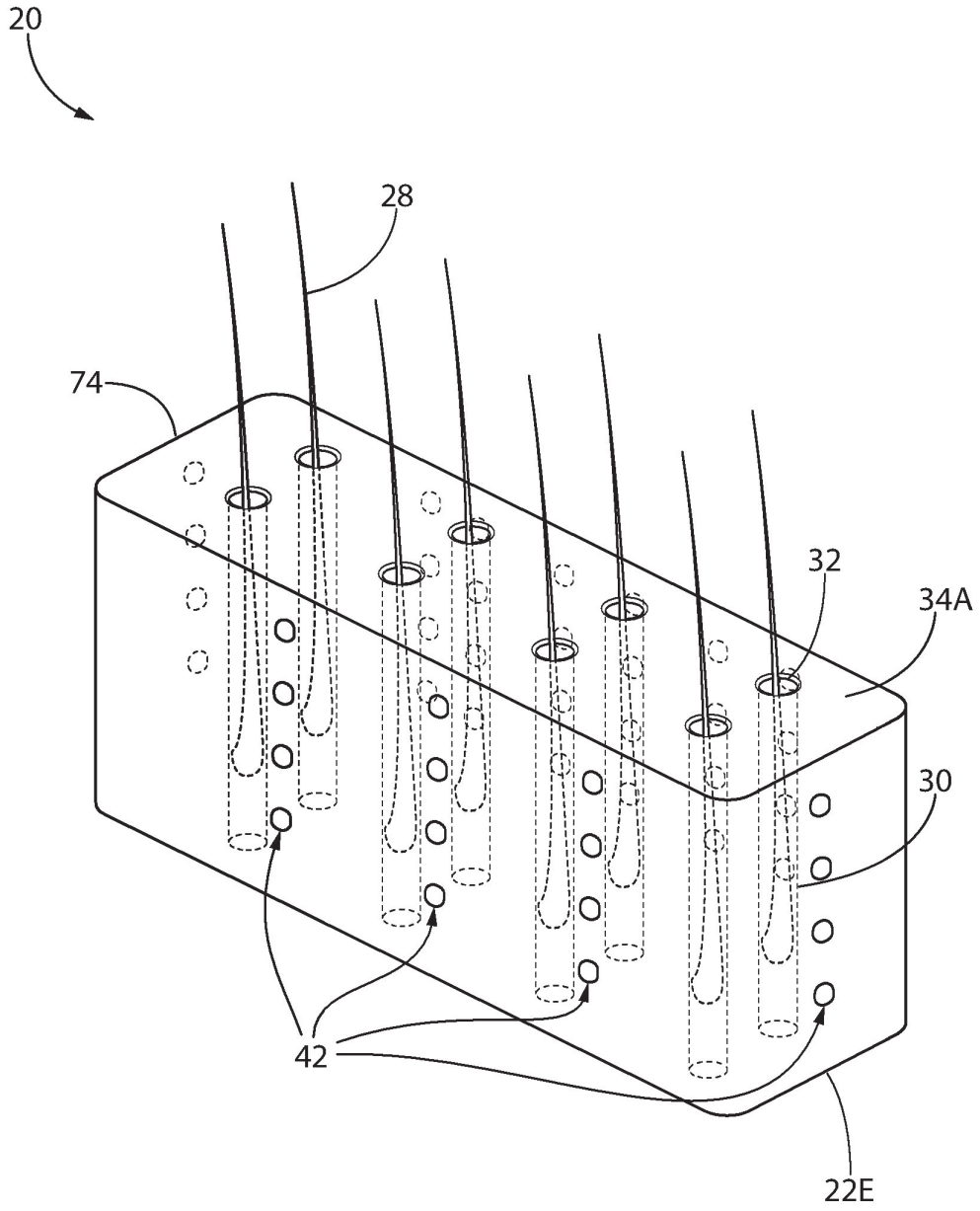

FIG. 28

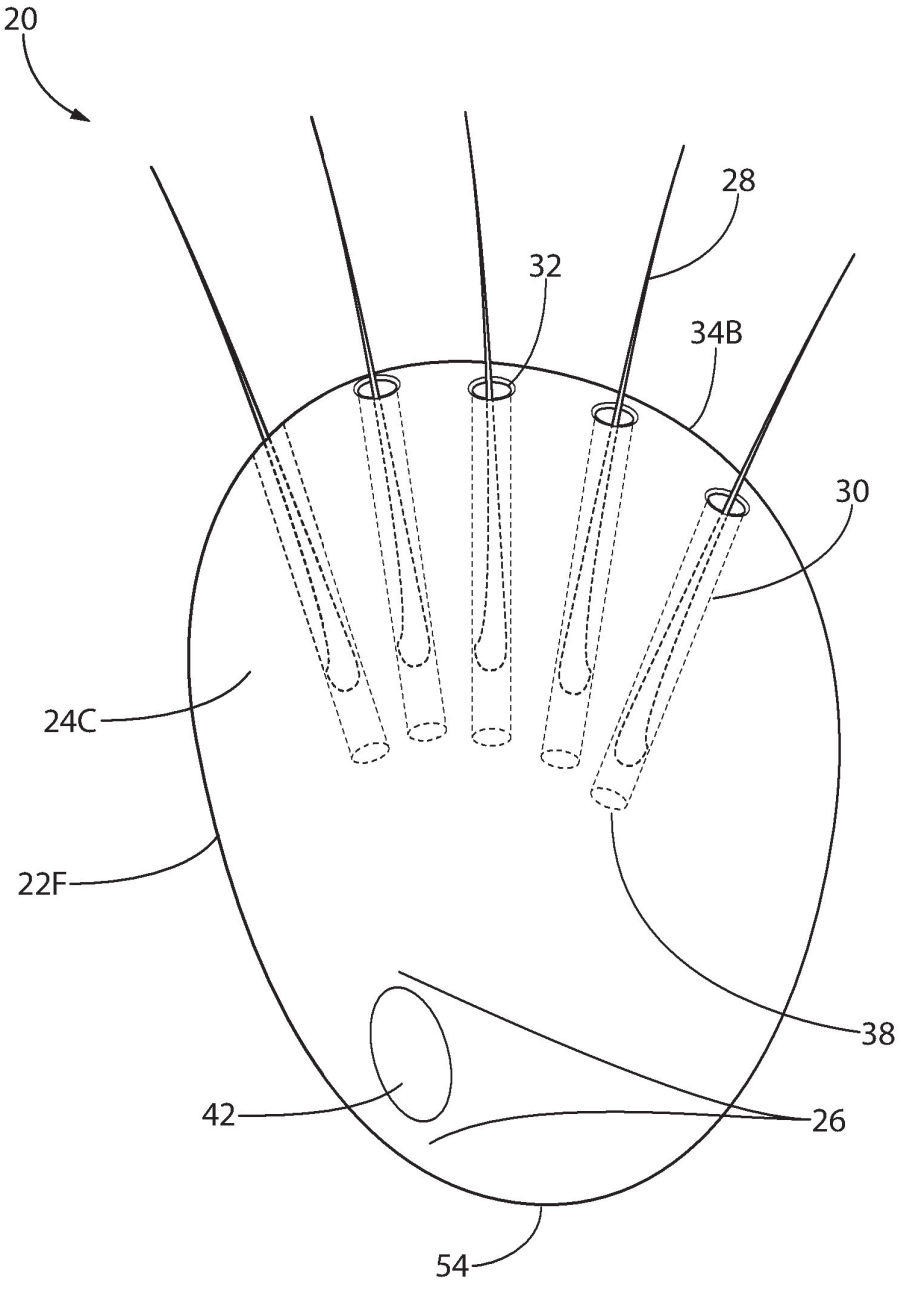

FIG. 29

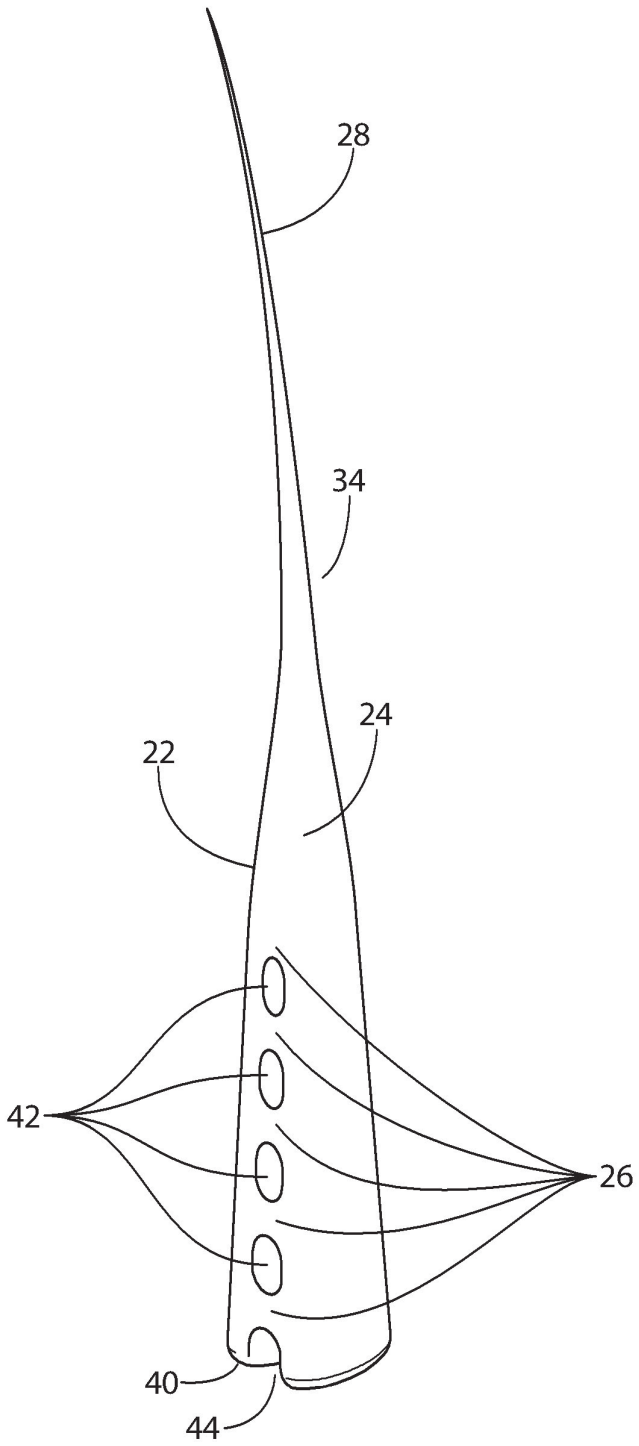

FIG. 30

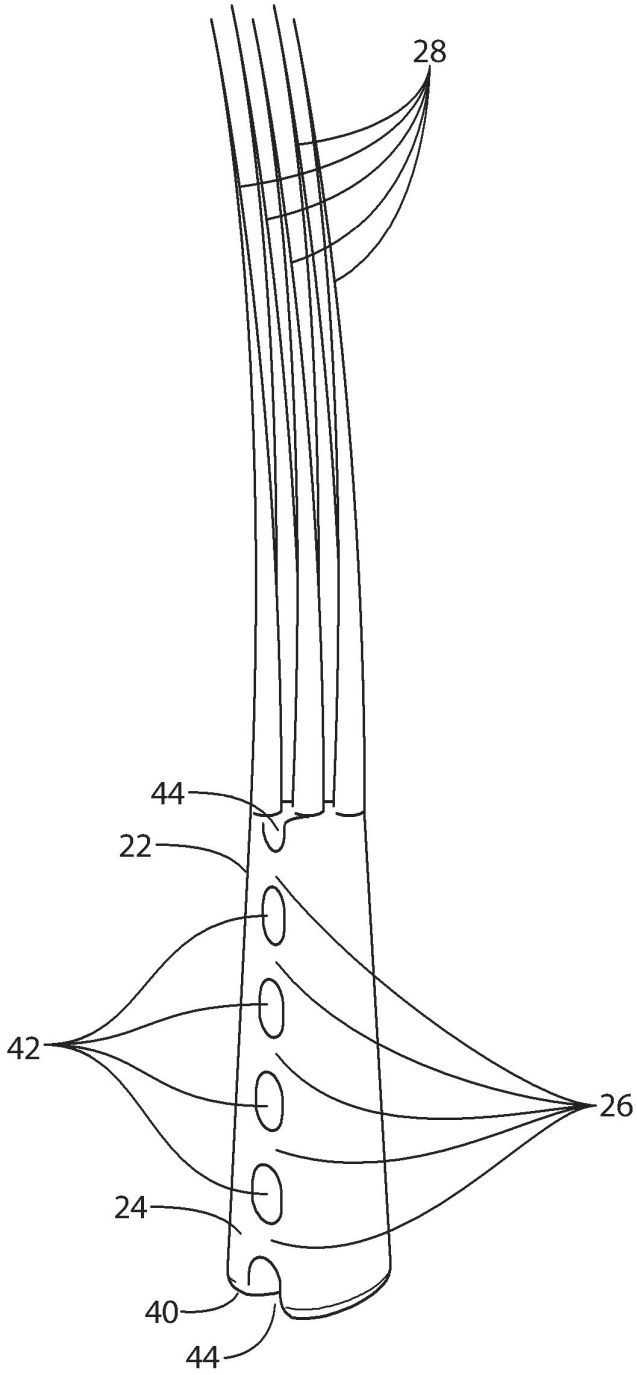

FIG. 31

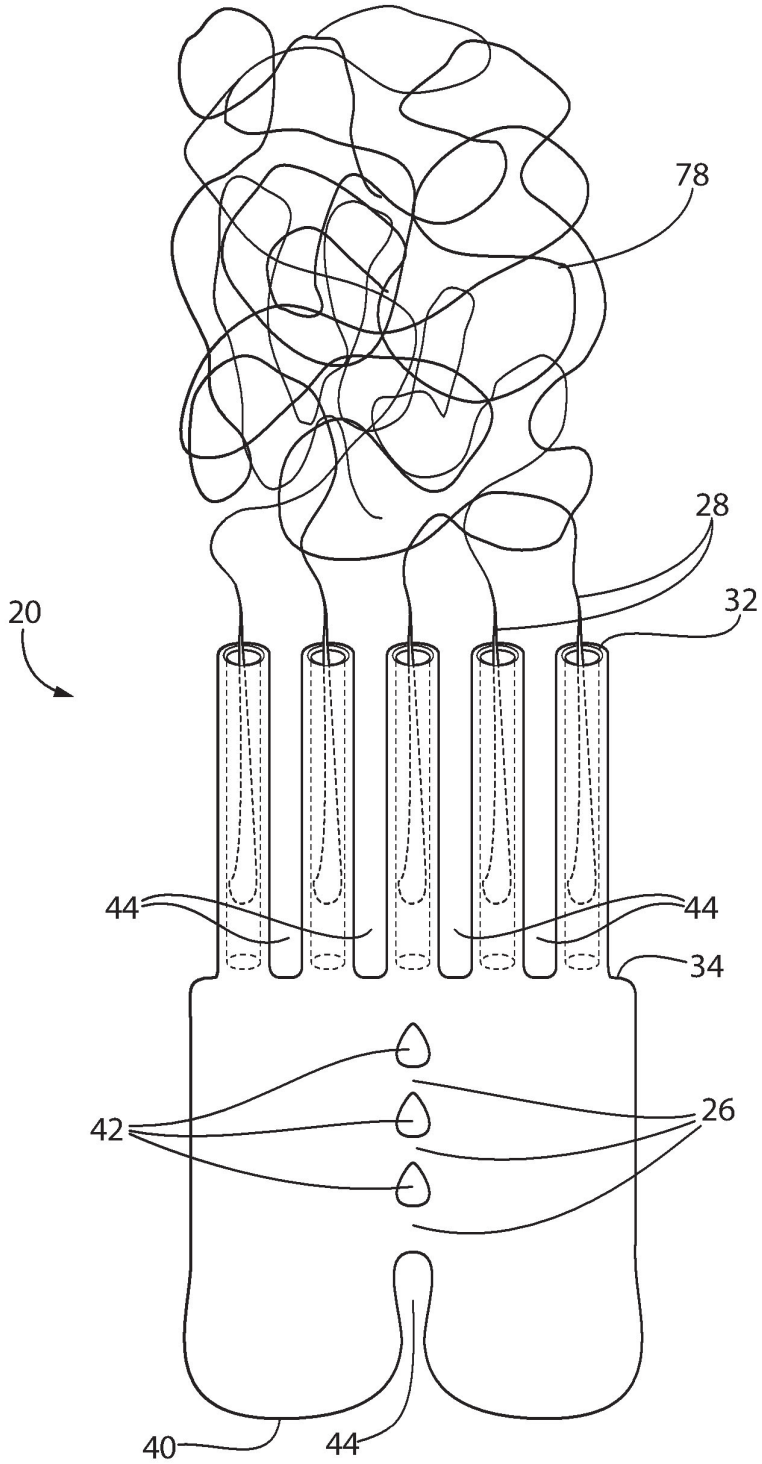

FIG. 32

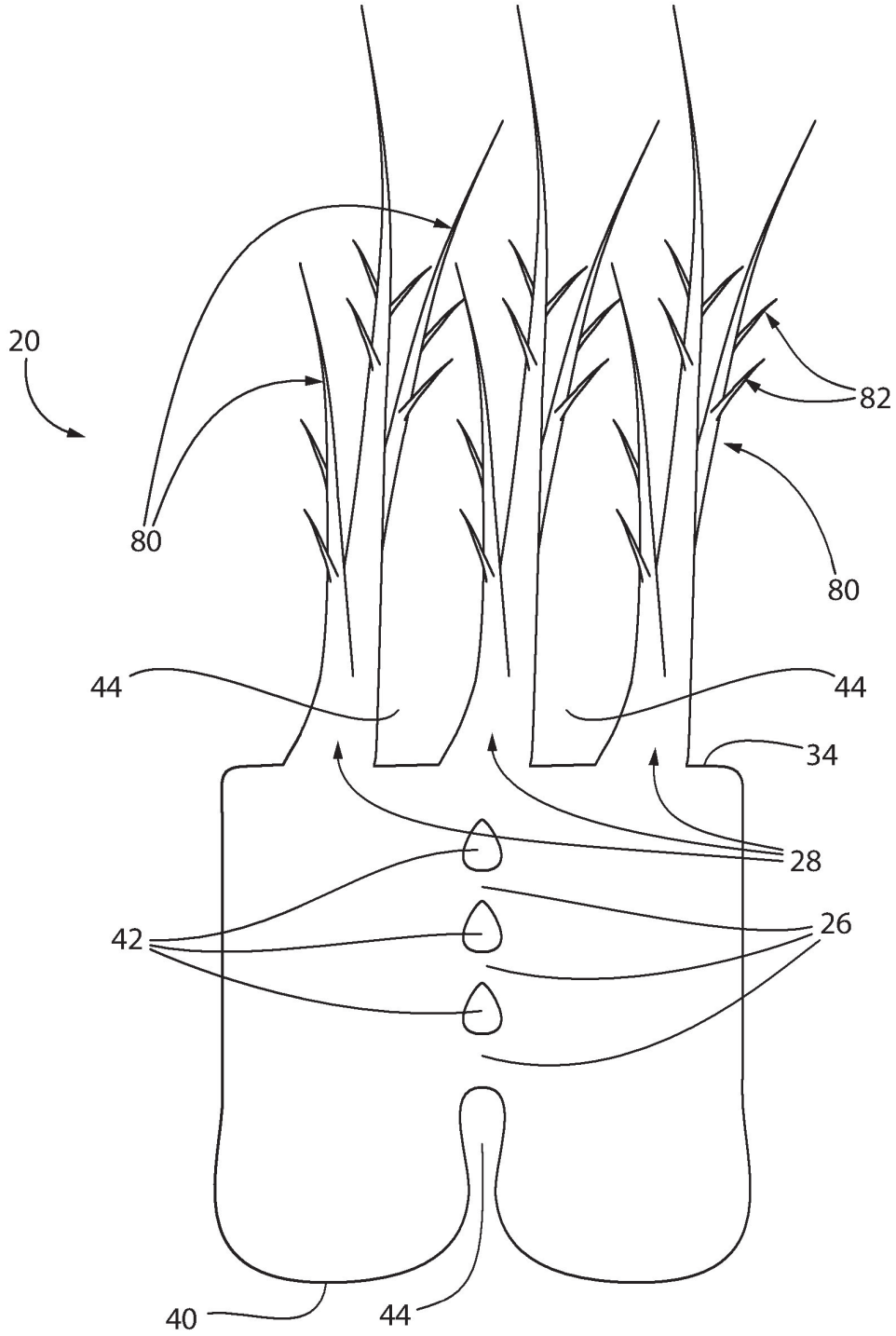

FIG. 33

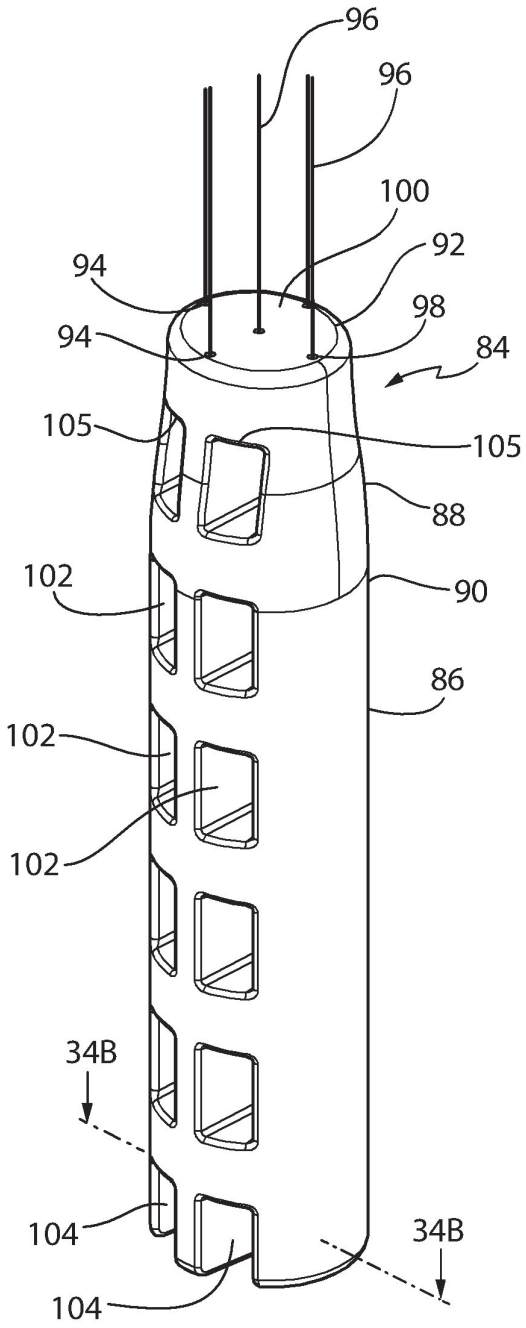

FIG. 34A

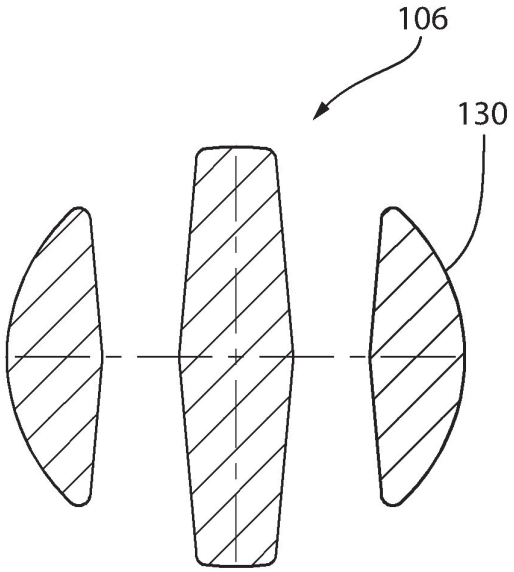

FIG. 34B

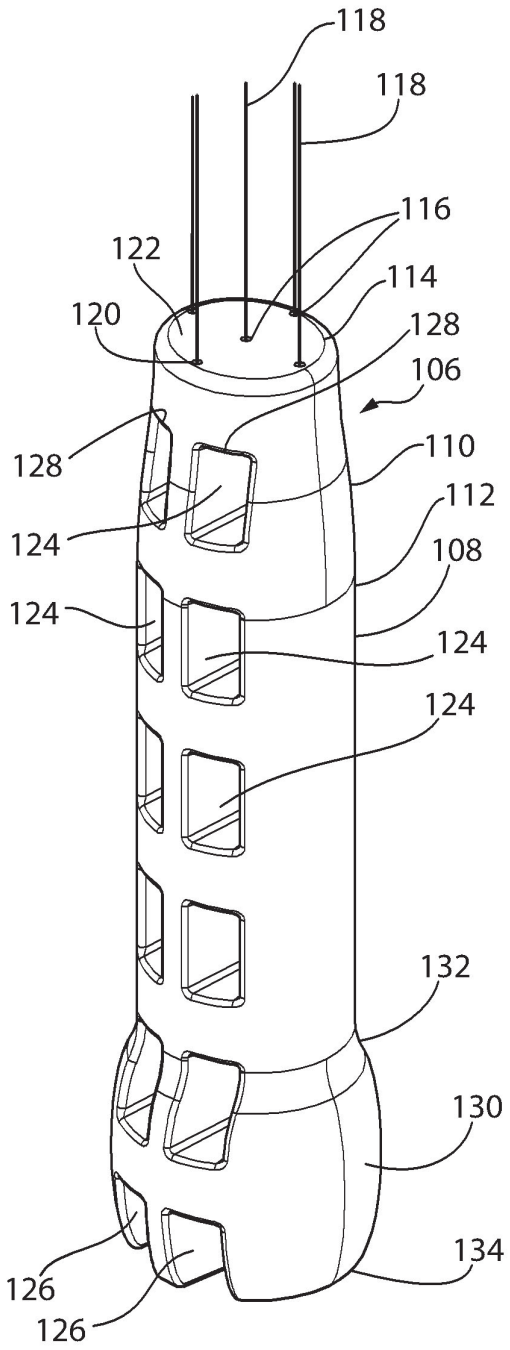
118
118
116
122
114
120
128
106
128
110
112
124
108
124
124
124
132
130
134
126
126

FIG. 35A

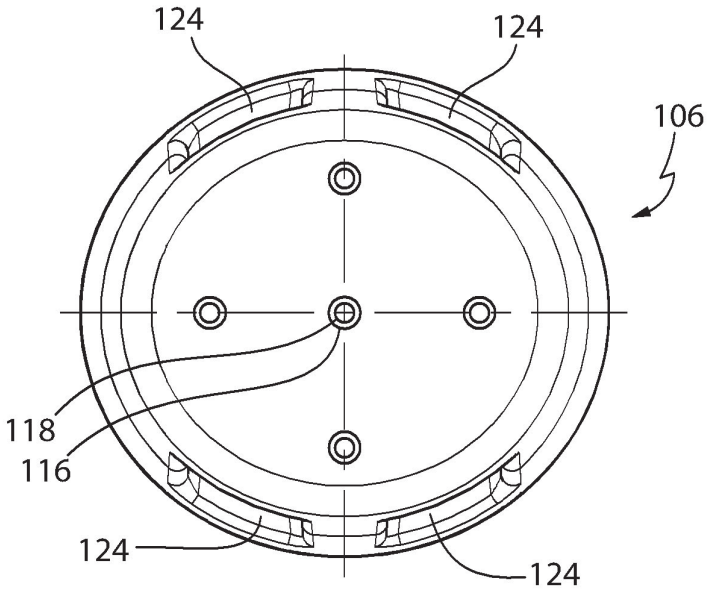

FIG. 35B

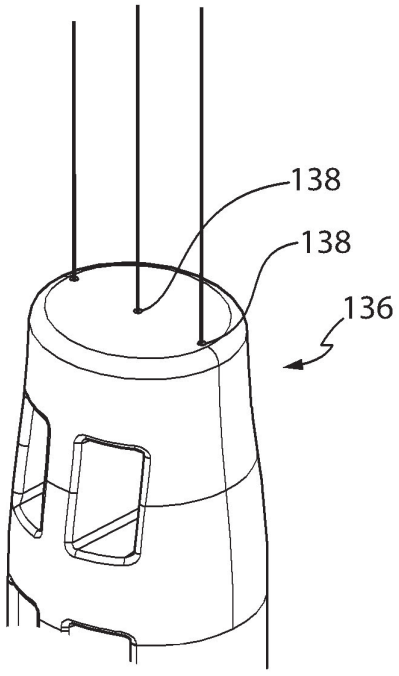

FIG. 36

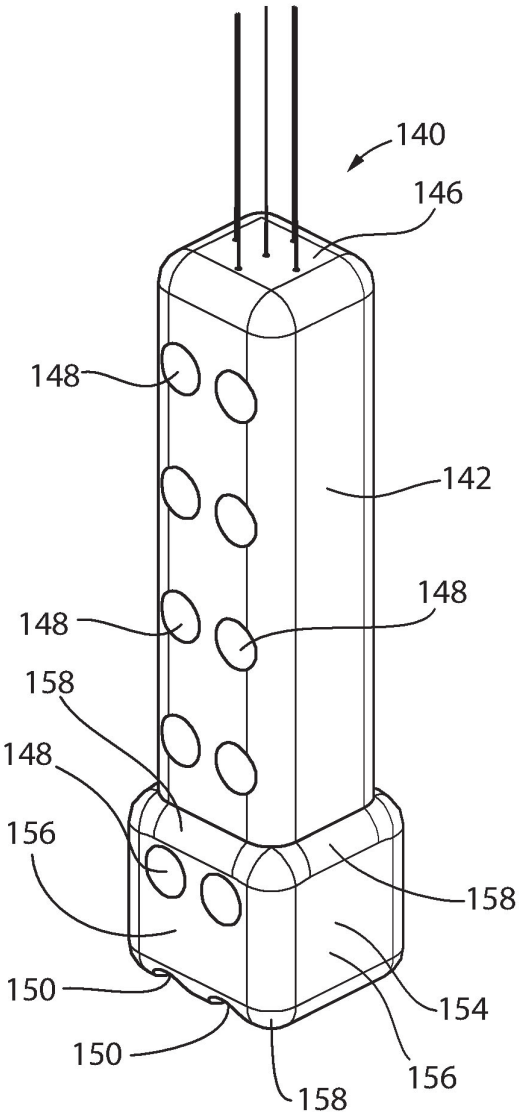

FIG. 37A

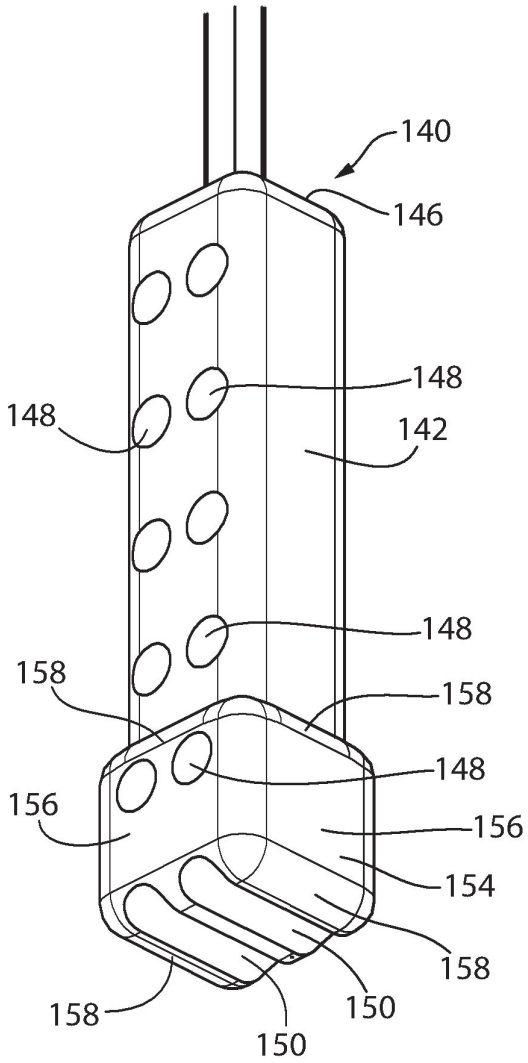

FIG. 37B

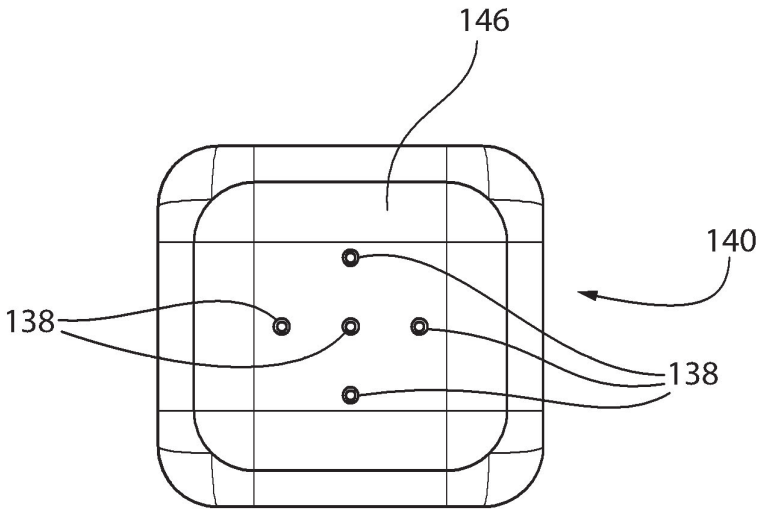

FIG. 37C

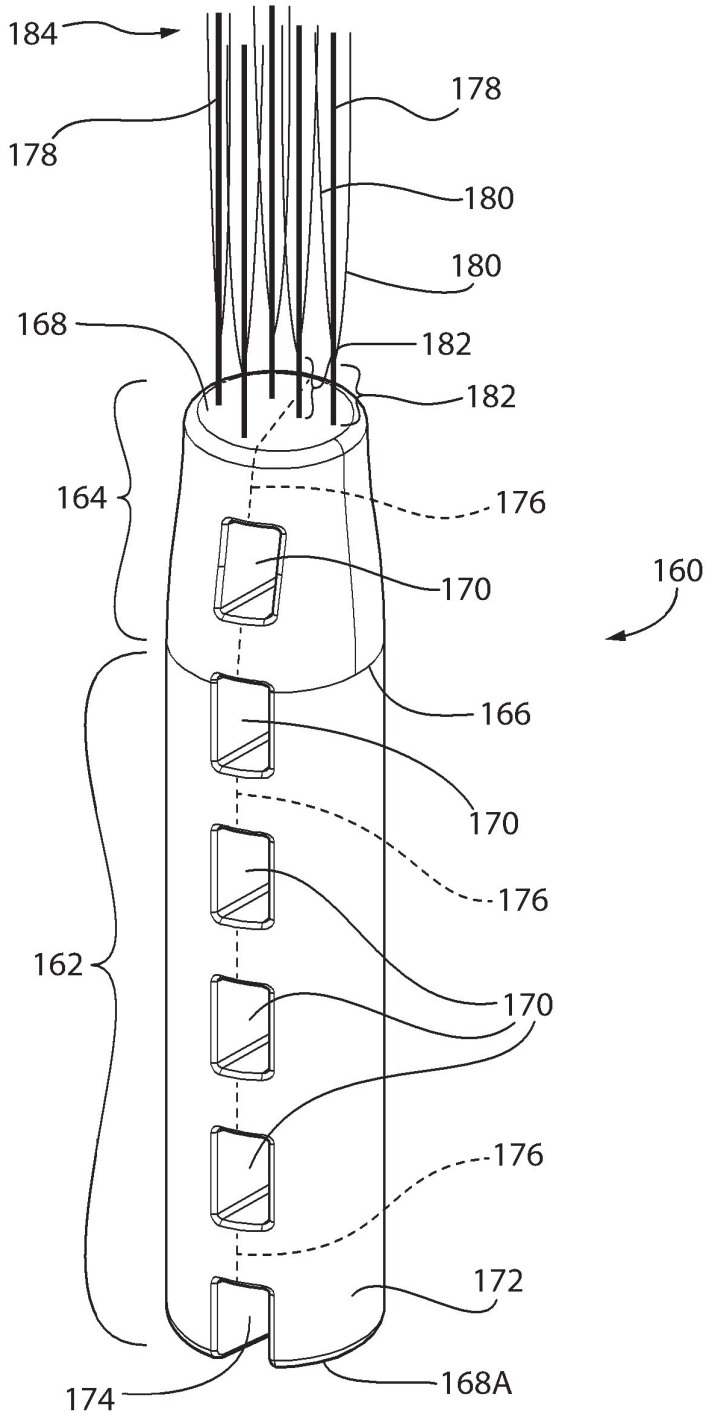
184
178
178
180
180
168
182
182
164
176
160
170
166
170
176
162
170
176
172
174
168A

FIG. 38