(12) INTERNATIONAL APPLICATION PUBLISHED UNDER THE PATENT COOPERATION TREATY (PCT)

(19) World Intellectual Property Organization
International Bureau

(43) International Publication Date
30 July 2015 (30.07.2015)

WIPO | PCT

(10) International Publication Number
WO 2015/111739 A1

(51) International Patent Classification:
H01L 21/027 (2006.01) *G03F 7/20* (2006.01)
B29C 59/02 (2006.01)

(21) International Application Number:
PCT/JP2015/051950

(22) International Filing Date:
20 January 2015 (20.01.2015)

(25) Filing Language: English

(26) Publication Language: English

(30) Priority Data:
2014-011784 24 January 2014 (24.01.2014) JP

(71) Applicant: **CANON KABUSHIKI KAISHA** [JP/JP]; 30-2, Shimomaruko 3-chome, Ohta-ku, Tokyo, 1468501 (JP).

(72) Inventors: **SATO, Kazuhiro**; c/o CANON KABUSHIKI KAISHA, 30-2, Shimomaruko 3-chome, Ohta-ku, Tokyo, 1468501 (JP). **HASEGAWA, Noriyasu**; c/o CANON KABUSHIKI KAISHA, 30-2, Shimomaruko 3-chome, Ohta-ku, Tokyo, 1468501 (JP). **MATSUMOTO, Takahiro**; c/o CANON KABUSHIKI KAISHA, 30-2, Shimomaruko 3-chome, Ohta-ku, Tokyo, 1468501 (JP).

(74) Agents: **OHTSUKA, Yasunori** et al.; 7th FL., KIOICHO PARK BLDG., 3-6, KIOICHO, CHIYODA-KU, Tokyo, 1020094 (JP).

(81) Designated States *(unless otherwise indicated, for every kind of national protection available)*: AE, AG, AL, AM, AO, AT, AU, AZ, BA, BB, BG, BH, BN, BR, BW, BY, BZ, CA, CH, CL, CN, CO, CR, CU, CZ, DE, DK, DM, DO, DZ, EC, EE, EG, ES, FI, GB, GD, GE, GH, GM, GT, HN, HR, HU, ID, IL, IN, IR, IS, KE, KG, KN, KP, KR, KZ, LA, LC, LK, LR, LS, LU, LY, MA, MD, ME, MG, MK, MN, MW, MX, MY, MZ, NA, NG, NI, NO, NZ, OM, PA, PE, PG, PH, PL, PT, QA, RO, RS, RU, RW, SA, SC, SD, SE, SG, SK, SL, SM, ST, SV, SY, TH, TJ, TM, TN, TR, TT, TZ, UA, UG, US, UZ, VC, VN, ZA, ZM, ZW.

(84) Designated States *(unless otherwise indicated, for every kind of regional protection available)*: ARIPO (BW, GH, GM, KE, LR, LS, MW, MZ, NA, RW, SD, SL, ST, SZ, TZ, UG, ZM, ZW), Eurasian (AM, AZ, BY, KG, KZ, RU, TJ, TM), European (AL, AT, BE, BG, CH, CY, CZ, DE, DK, EE, ES, FI, FR, GB, GR, HR, HU, IE, IS, IT, LT, LU, LV, MC, MK, MT, NL, NO, PL, PT, RO, RS, SE, SI, SK, SM, TR), OAPI (BF, BJ, CF, CG, CI, CM, GA, GN, GQ, GW, KM, ML, MR, NE, SN, TD, TG).

[Continued on next page]

(54) Title: IMPRINT APPARATUS AND METHOD OF MANUFACTURING ARTICLE

FIG. 1

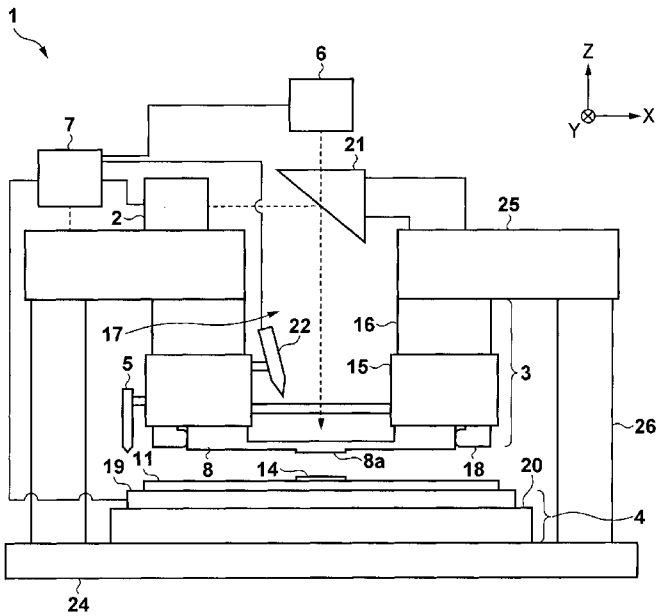

(57) Abstract: The present invention provides an imprint apparatus that molds an imprint material on a shot region of a substrate by using a mold, comprising a detection unit configured to detect first light with which a first mark of the mold and a second mark of the substrate are irradiated and measure a position deviation between the first mark and the second mark, a heating unit configured to irradiate the substrate with second light for heating the substrate and deforming the shot region, and a control unit configured to control alignment between the mold and the substrate based on the position deviation, wherein a parameter of the detection unit or the heating unit is set not to detect the second light by the detection unit while the first light is detected and the substrate is irradiated with the second light.

WO 2015/111739 A1

Published:

— *with international search report (Art. 21(3))*