FIG.1(a)

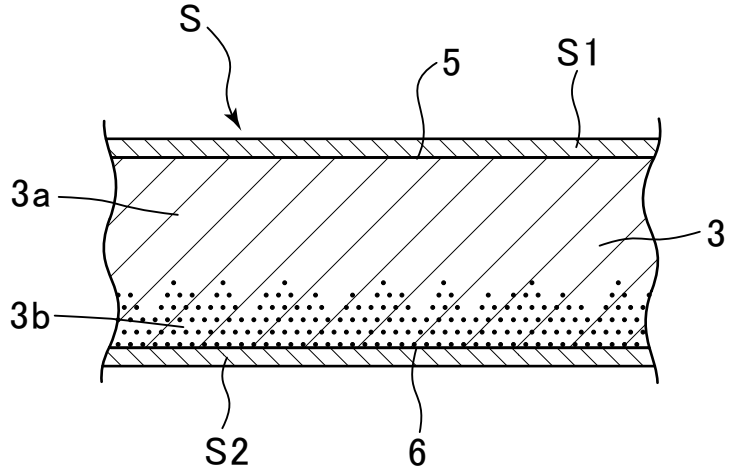

FIG.1(b)

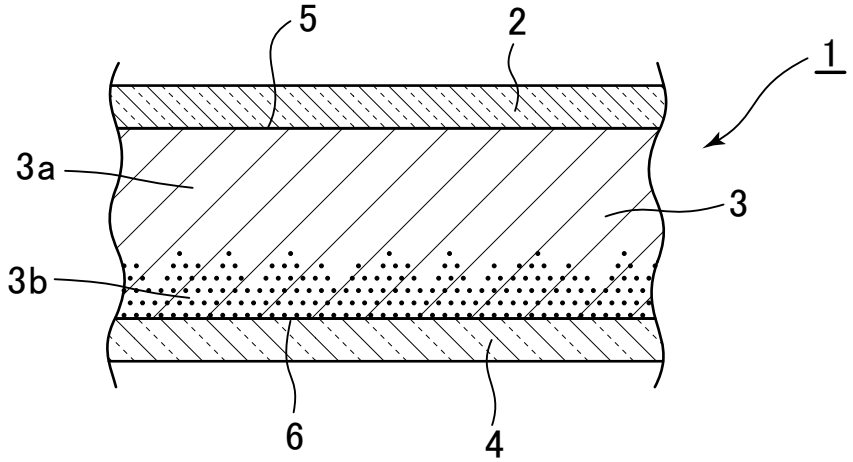

FIG.2

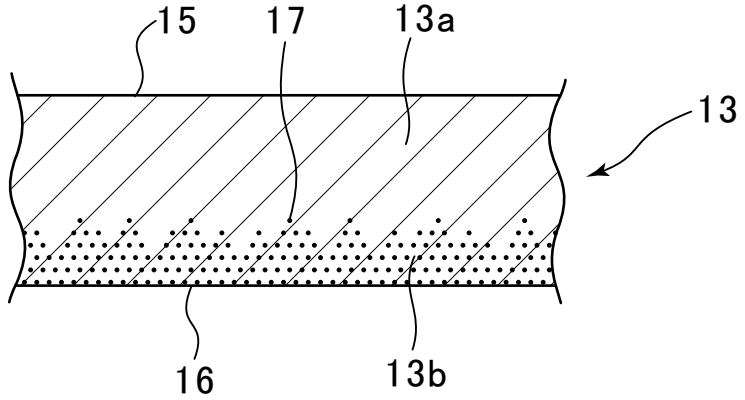

FIG.3

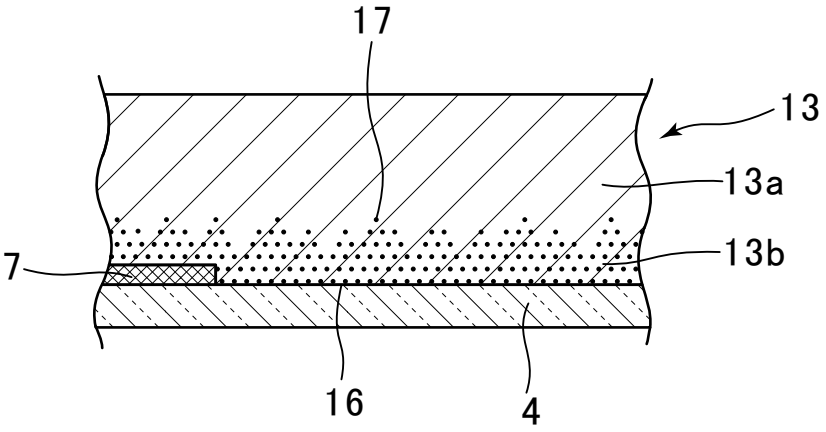

FIG.4

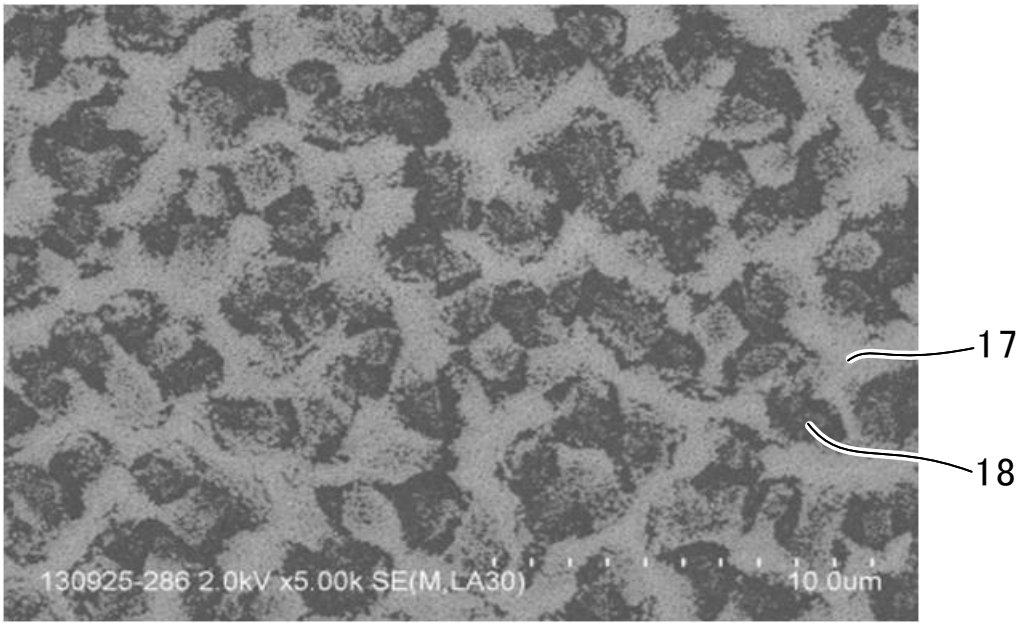

FIG.5(a)

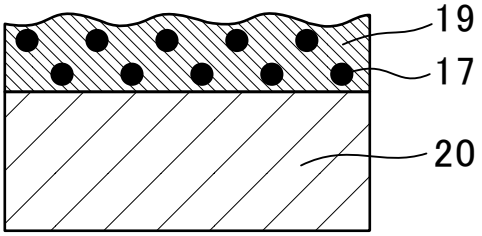

FIG.5(b)

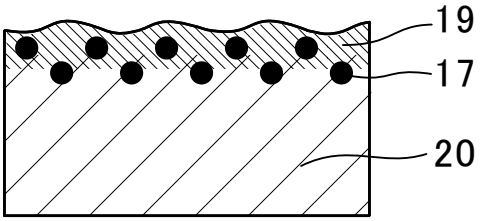

FIG.5(c)

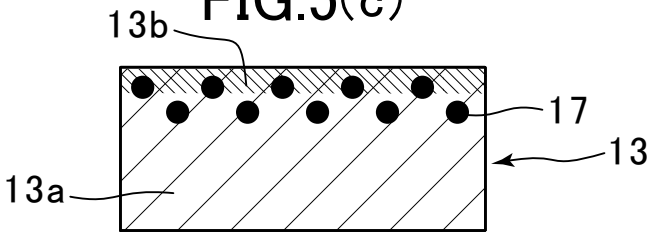

FIG.6

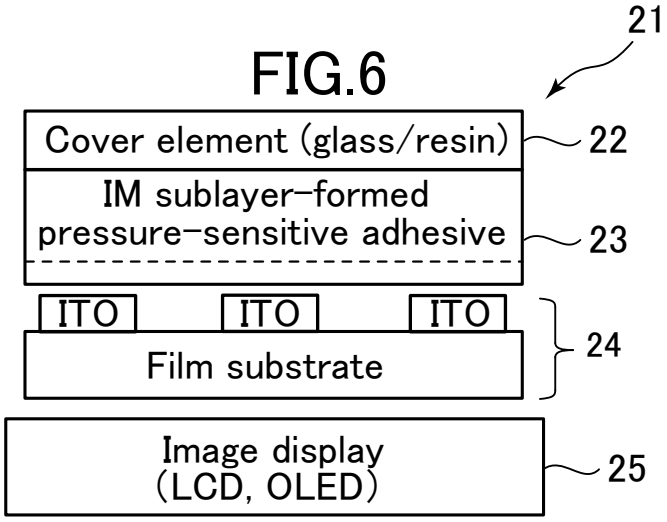

FIG.7(a)

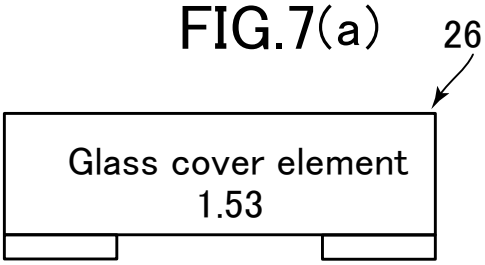

FIG.7(b)

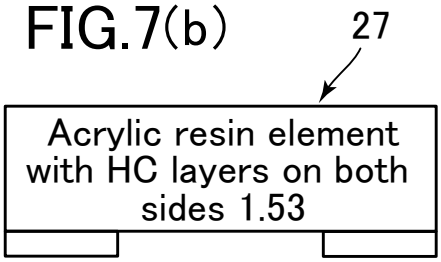

FIG.8(a)

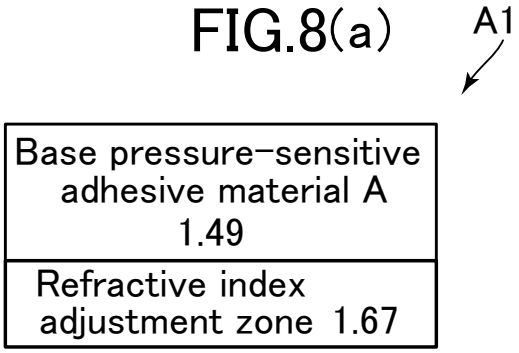

FIG.8(b)

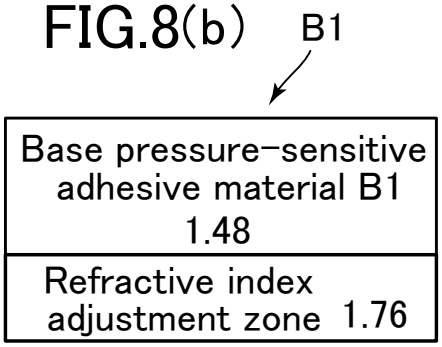

FIG.9(a)

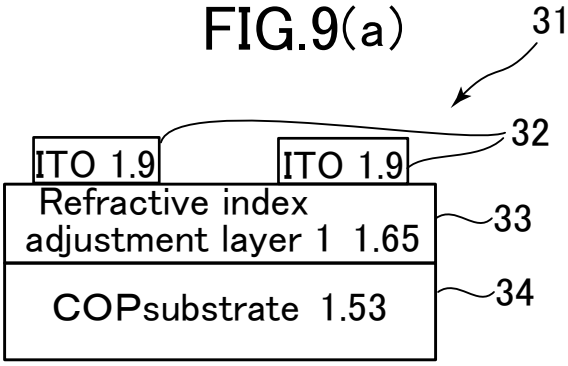

FIG.9(b)

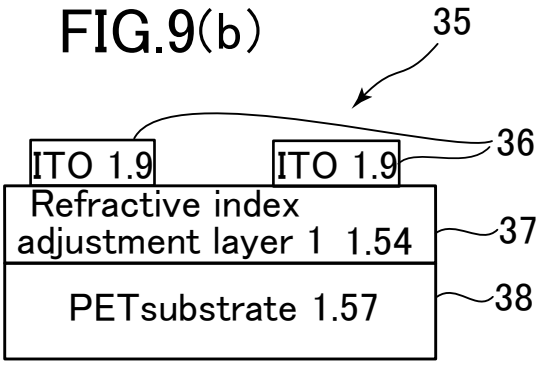

FIG.10(a)

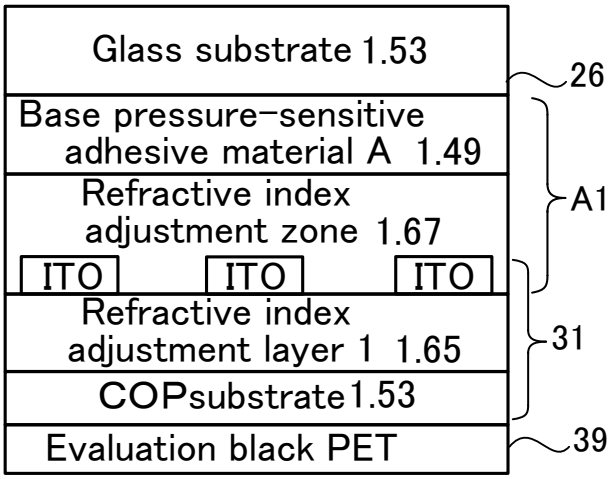

FIG.10(b)

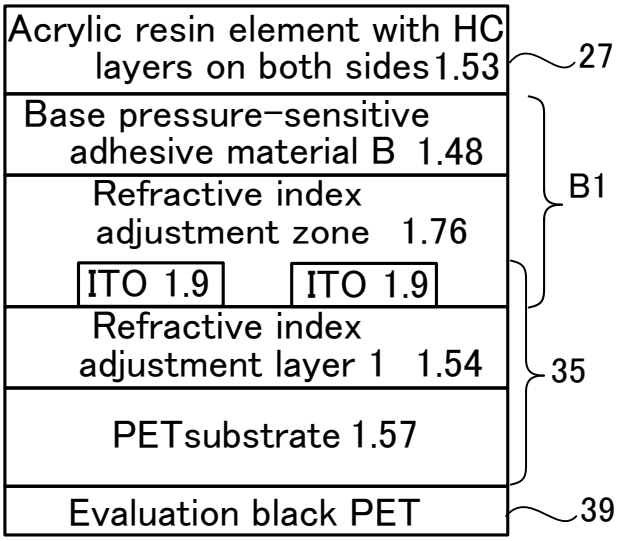

FIG.11(a)

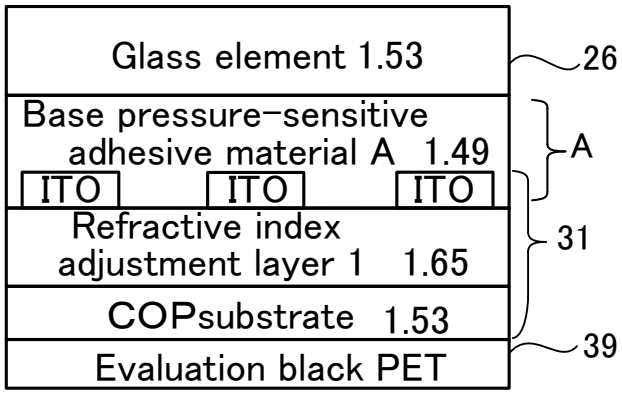

FIG.11(b)

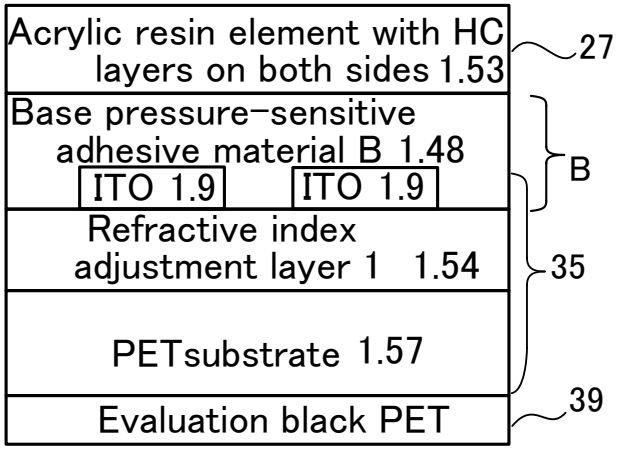

FIG.12

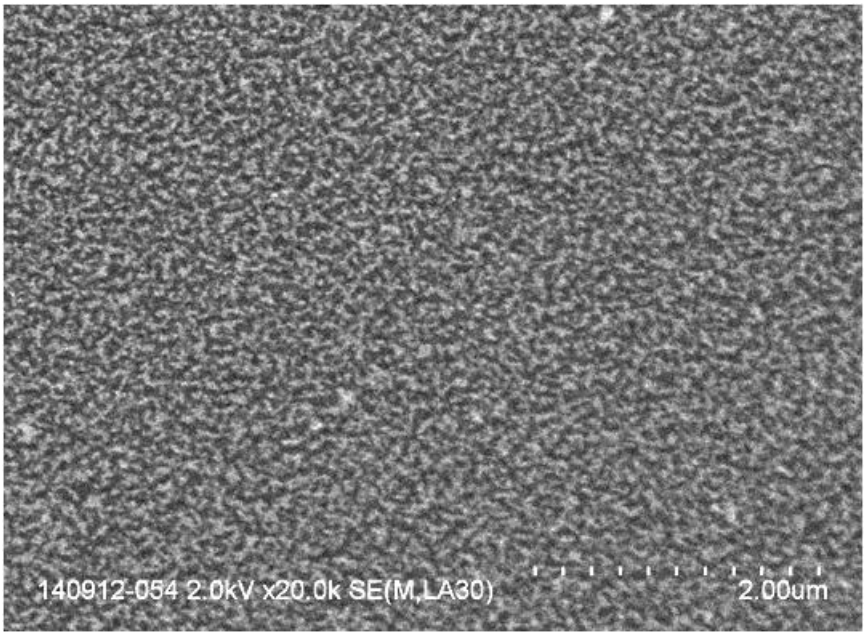

FIG.13(a)

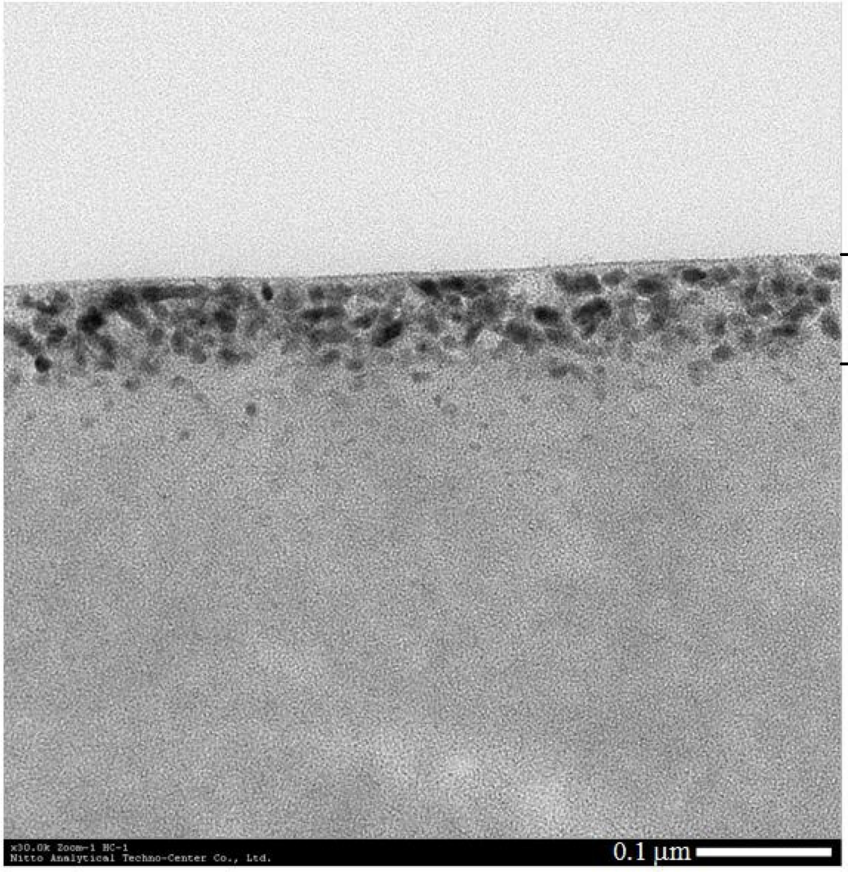
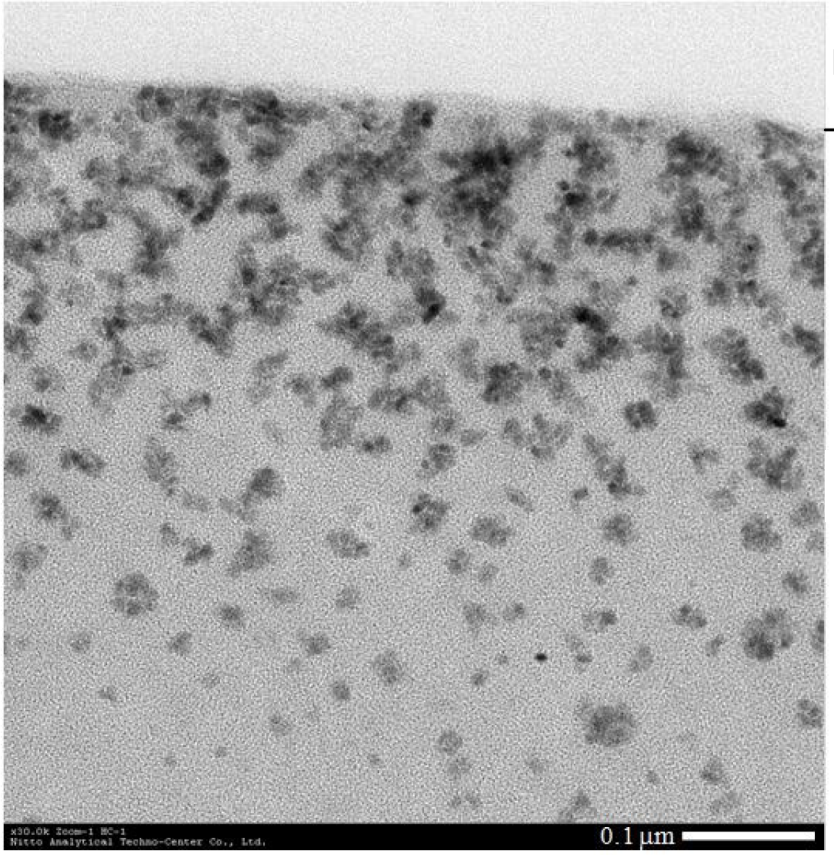
FIG.13(b)