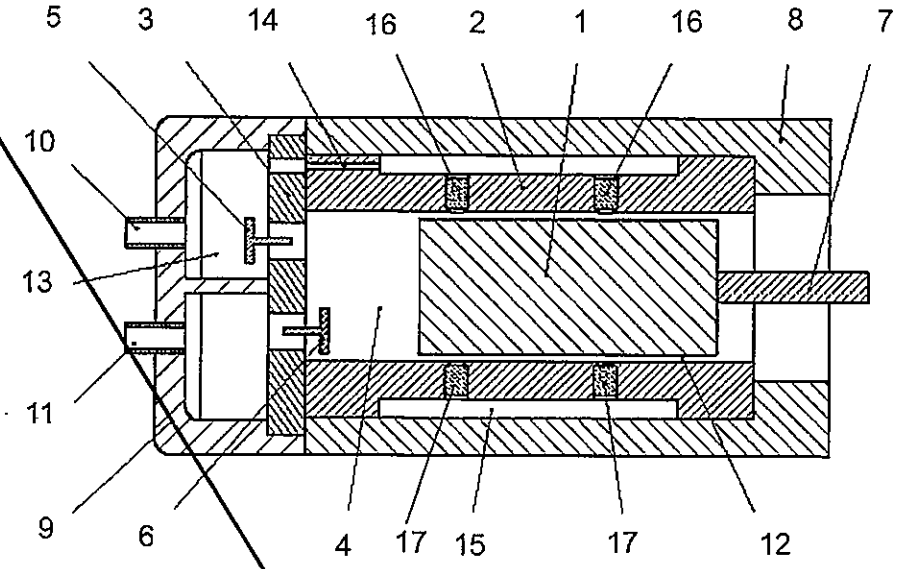
5
3
14
16
2
1
16
8
7
10
13
11
9
6
4
17
15
17
12

Fig. 1

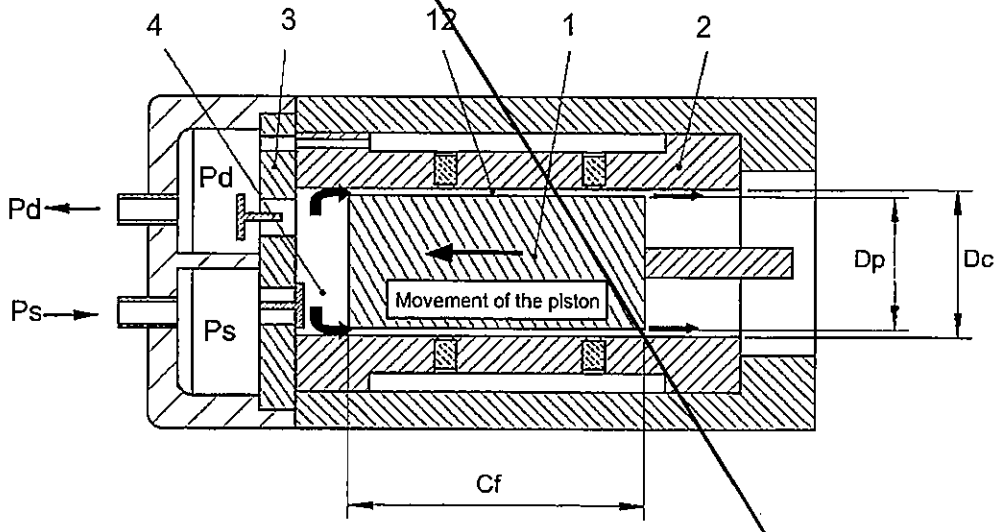
4
3
12
1
2
Pd
Pd
Ps
Ps
Movement of the piston
Dp
Dc
Cf

Fig. 2

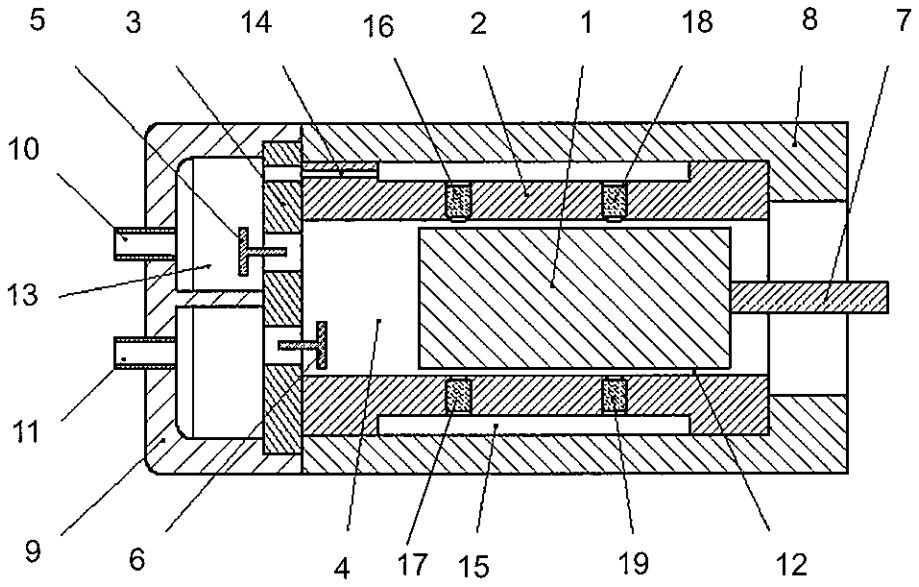
5
3
14
16
2
1
18
8
7
10
13
11
9
6
4
17
15
19
12

Fig. 1

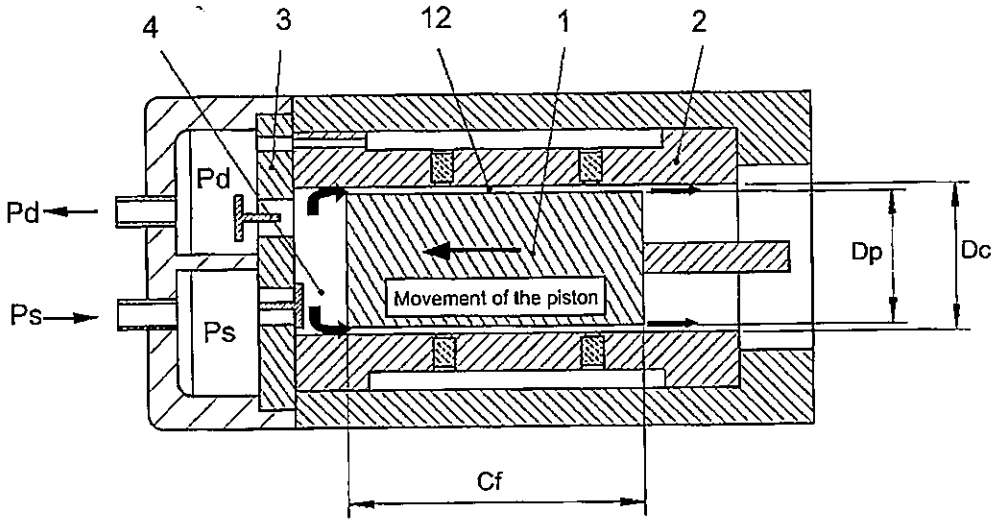
4
3
12
1
2
Pd
Pd
Ps
Ps
Movement of the piston
Dp
Dc
Cf

Fig. 2