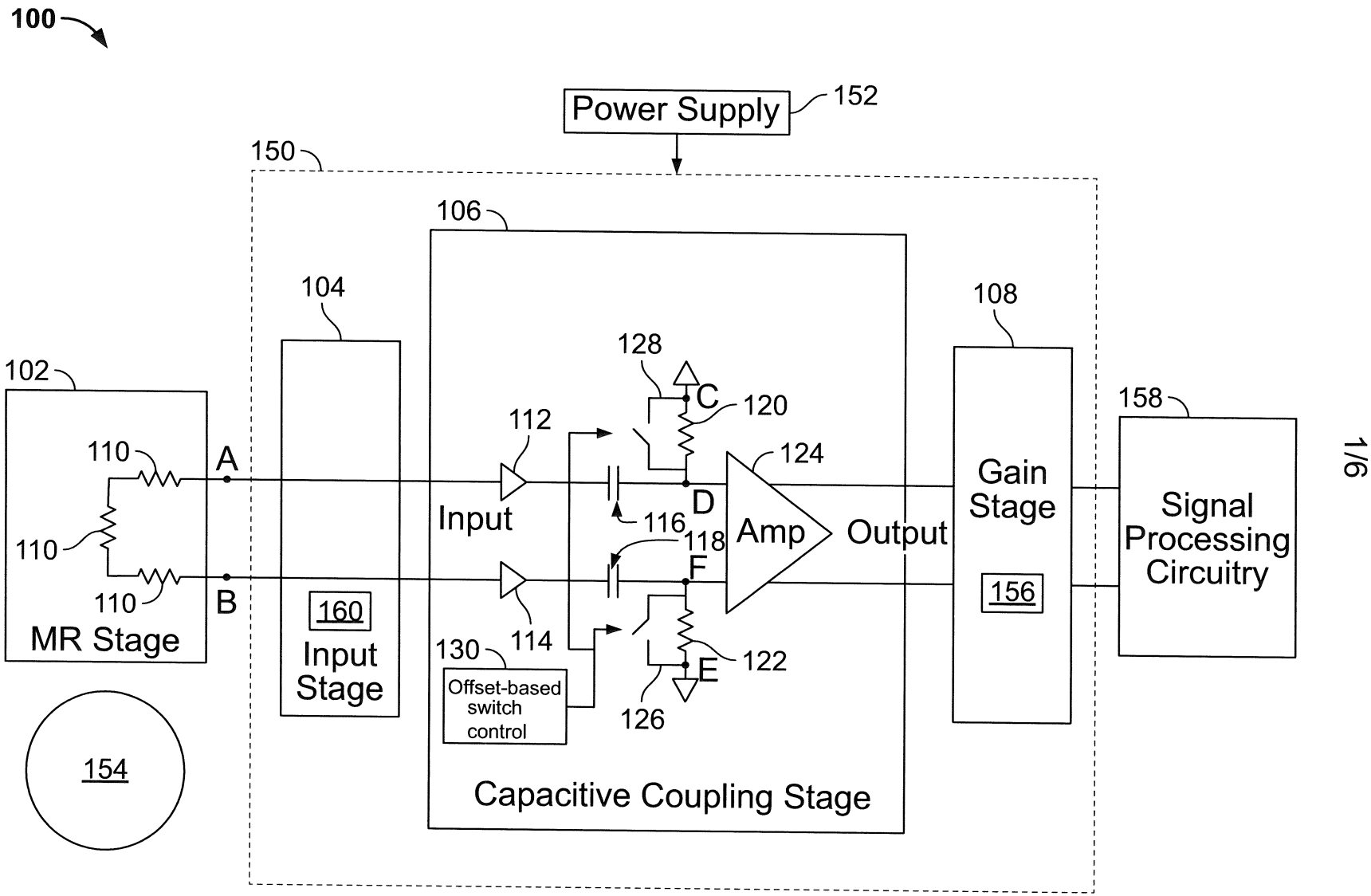
100
Power Supply
152
150
106
104
108
102
128
C
120
112
124
158
110
A
Input
D
116
118
Amp
Output
Gain
Stage
Signal
Processing
Circuitry
110
F
110
B
160
156
MR Stage
Input
Stage
130
114
122
E
Offset-based
switch
control
126
154
Capacitive Coupling Stage

FIG. 1

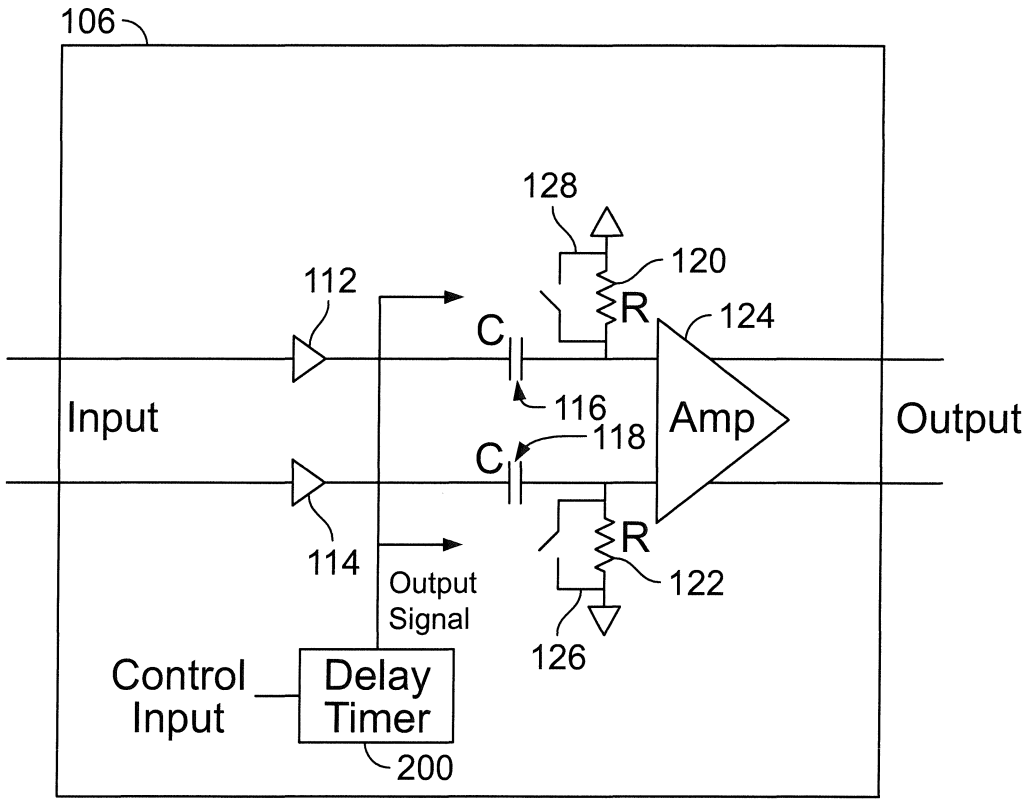
106
128
120
112
R
124
C
116
Input
Amp
Output
118
C
R
114
122
Output
Signal
126
Control
Input
Delay
Timer
200

FIG. 2

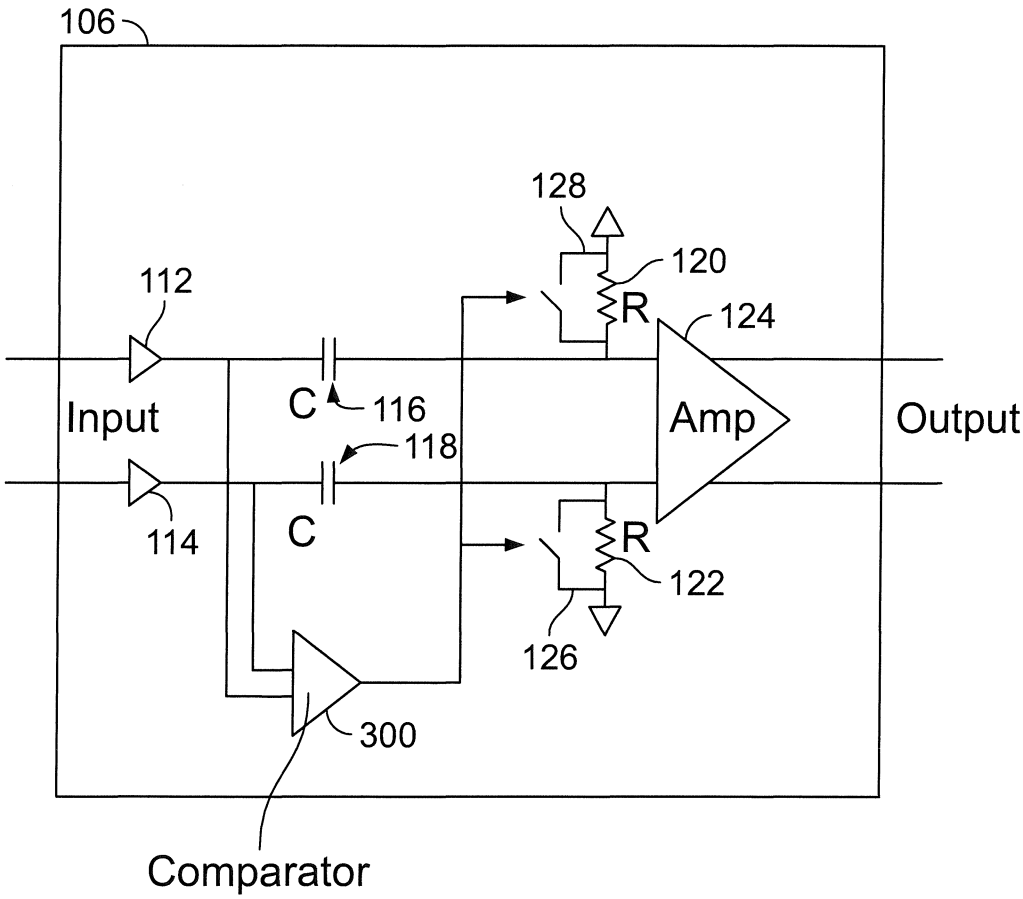
106
128
120
112
R
124
Input
C
116
Amp
Output
118
114
C
R
122
126
300
Comparator

FIG. 3

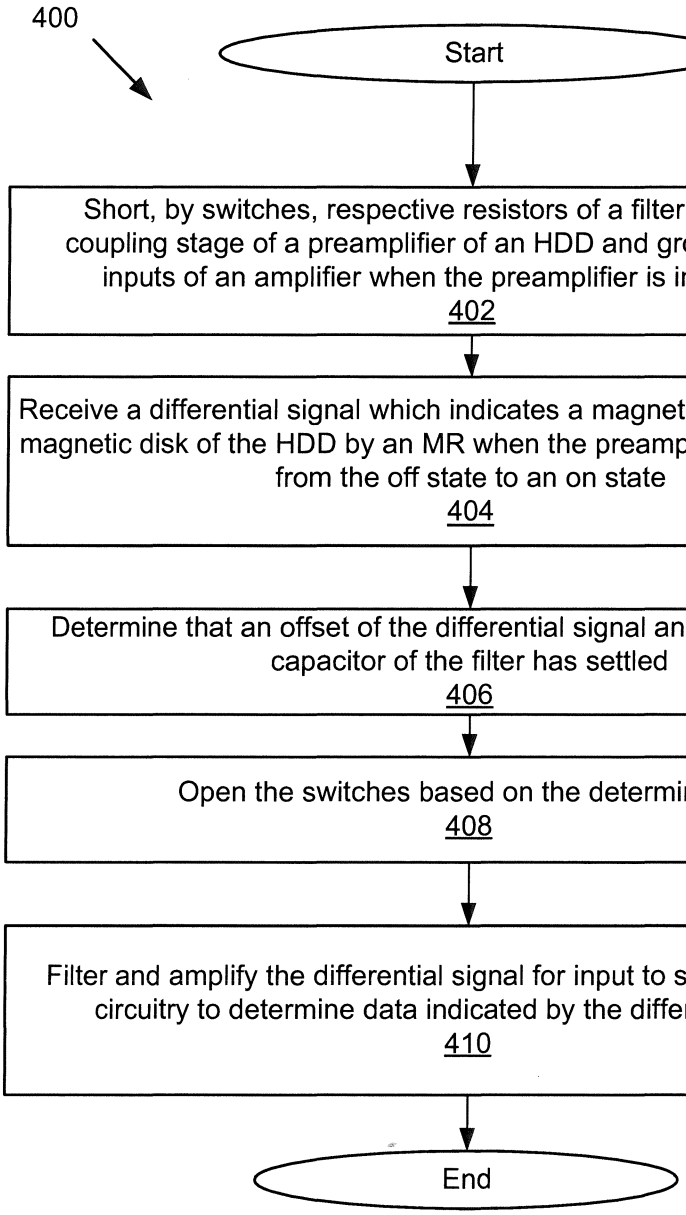
400
Start
Short, by switches, respective resistors of a filter in a capacitive coupling stage of a preamplifier of an HDD and ground respective inputs of an amplifier when the preamplifier is in an off state
402
Receive a differential signal which indicates a magnetic field sensed on a magnetic disk of the HDD by an MR when the preamplifier is powered on from the off state to an on state
404
Determine that an offset of the differential signal and/or charge on a capacitor of the filter has settled
406
Open the switches based on the determination
408
Filter and amplify the differential signal for input to signal processing circuitry to determine data indicated by the differential signal
410
End

FIG. 4

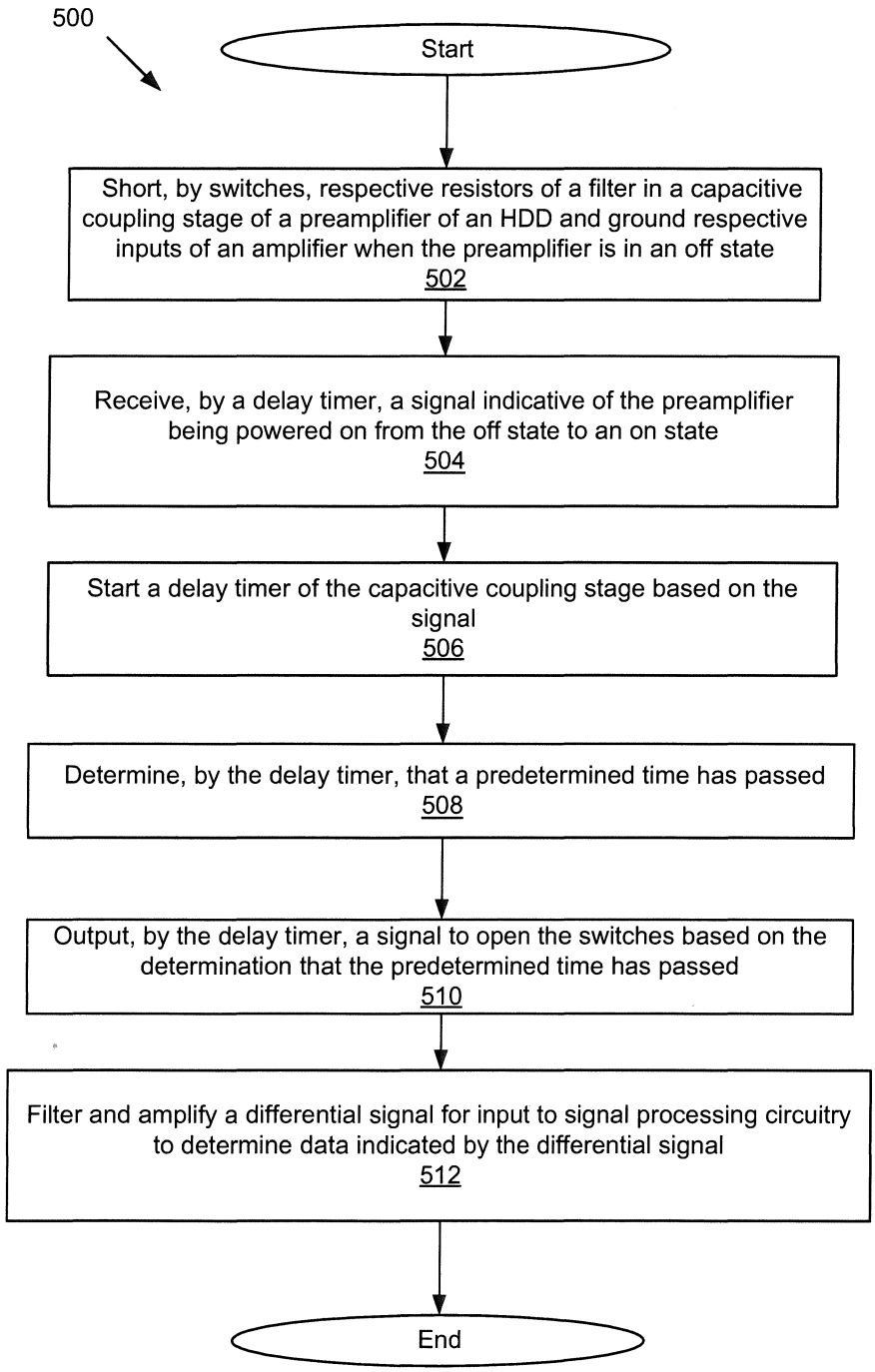
500
Start
Short, by switches, respective resistors of a filter in a capacitive coupling stage of a preamplifier of an HDD and ground respective inputs of an amplifier when the preamplifier is in an off state
502
Receive, by a delay timer, a signal indicative of the preamplifier being powered on from the off state to an on state
504
Start a delay timer of the capacitive coupling stage based on the signal
506
Determine, by the delay timer, that a predetermined time has passed
508
Output, by the delay timer, a signal to open the switches based on the determination that the predetermined time has passed
510
Filter and amplify a differential signal for input to signal processing circuitry to determine data indicated by the differential signal
512
End

FIG. 5

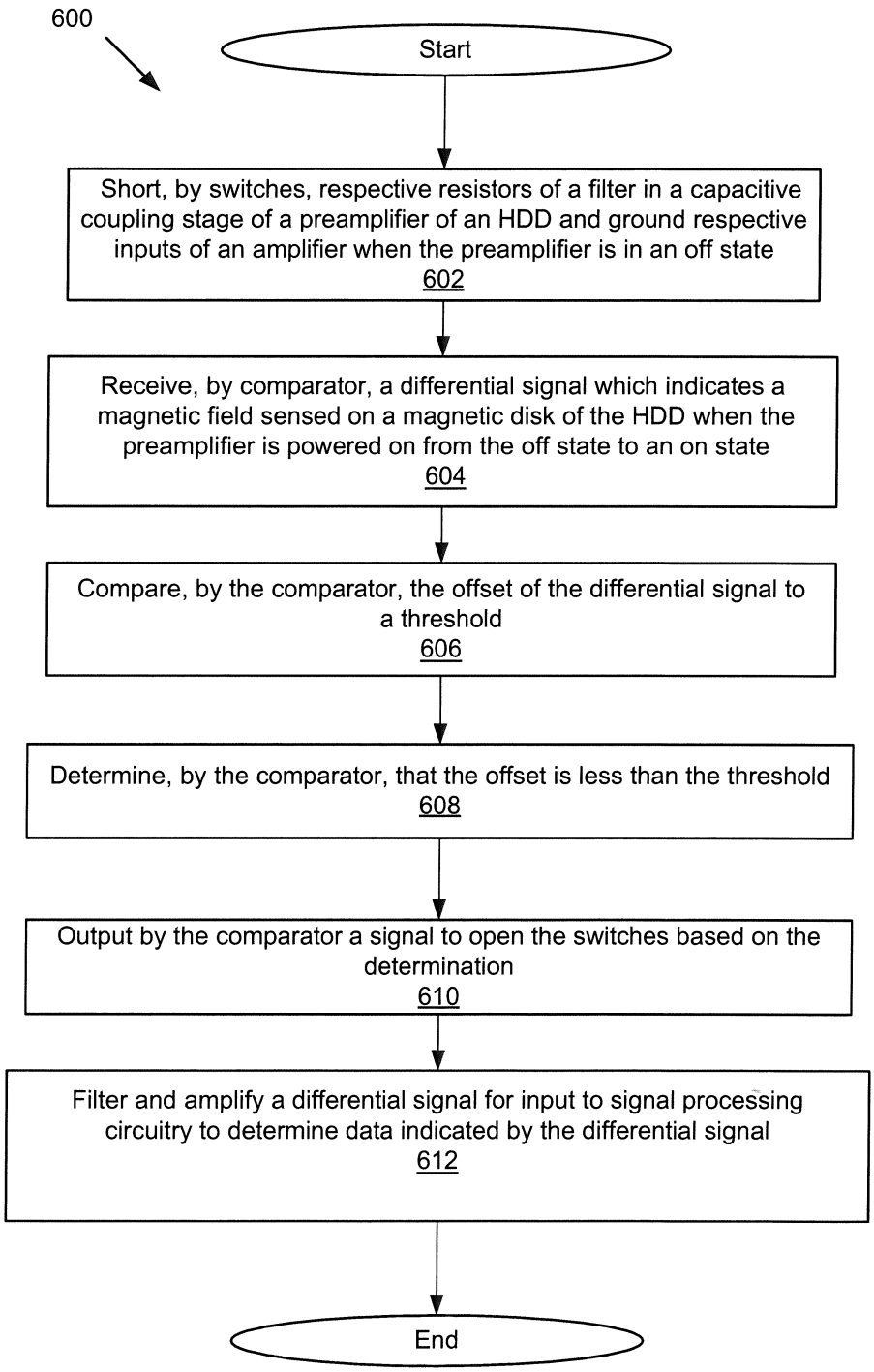
600
Start
Short, by switches, respective resistors of a filter in a capacitive coupling stage of a preamplifier of an HDD and ground respective inputs of an amplifier when the preamplifier is in an off state
602
Receive, by comparator, a differential signal which indicates a magnetic field sensed on a magnetic disk of the HDD when the preamplifier is powered on from the off state to an on state
604
Compare, by the comparator, the offset of the differential signal to a threshold
606
Determine, by the comparator, that the offset is less than the threshold
608
Output by the comparator a signal to open the switches based on the determination
610
Filter and amplify a differential signal for input to signal processing circuitry to determine data indicated by the differential signal
612
End

FIG. 6