Figure 1

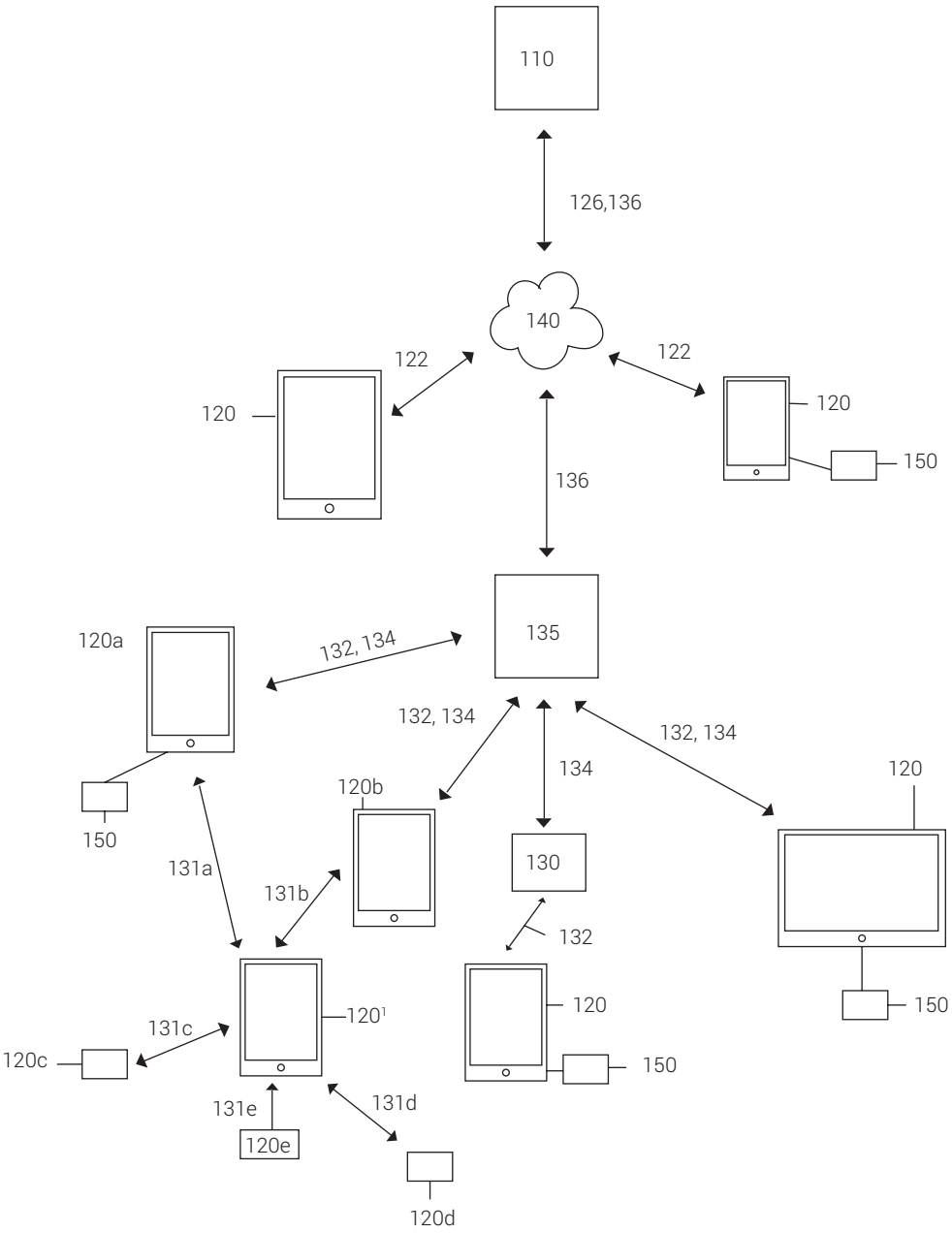
110
126,136
140
122
122
120
120
150
136
135
120a
132, 134
132, 134
132, 134
134
120
120b
150
130
131a
131b
132
120
150
120¹
131c
120c
150
131e
131d
120e
120d

Figure 2A

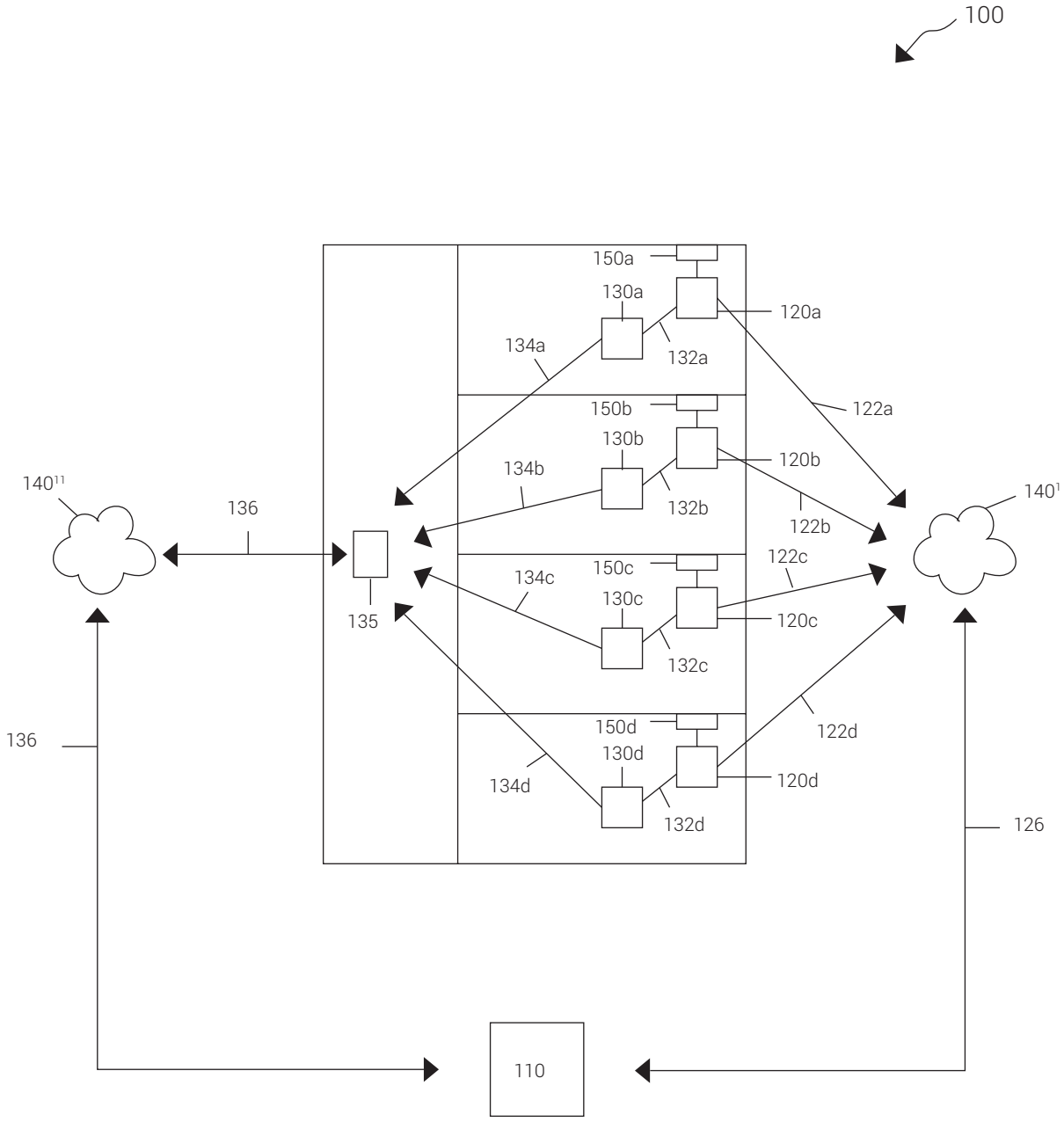
100
150a
130a
120a
134a
132a
122a
150b
130b
120b
134b
132b
122b
140[11]
136
140[1]
122c
150c
134c
130c
120c
135
132c
150d
122d
136
130d
134d
120d
132d
126
110

Figure 2B

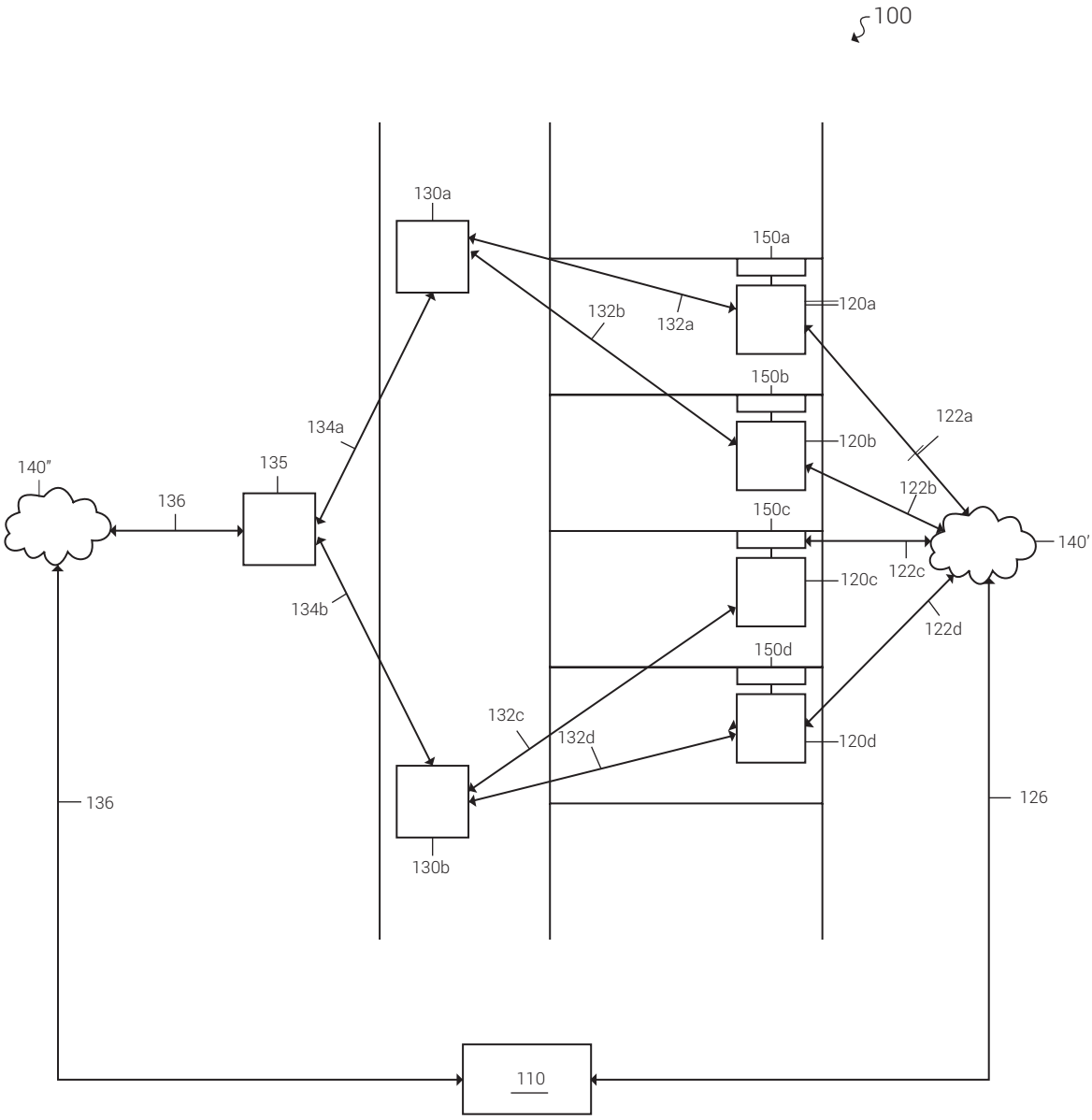
100
130a
150a
120a
132b
132a
150b
122a
120b
134a
140″
135
136
122b
150c
140′
120c
122c
134b
122d
150d
132c
132d
120d
136
126
130b
110

Figure 2C

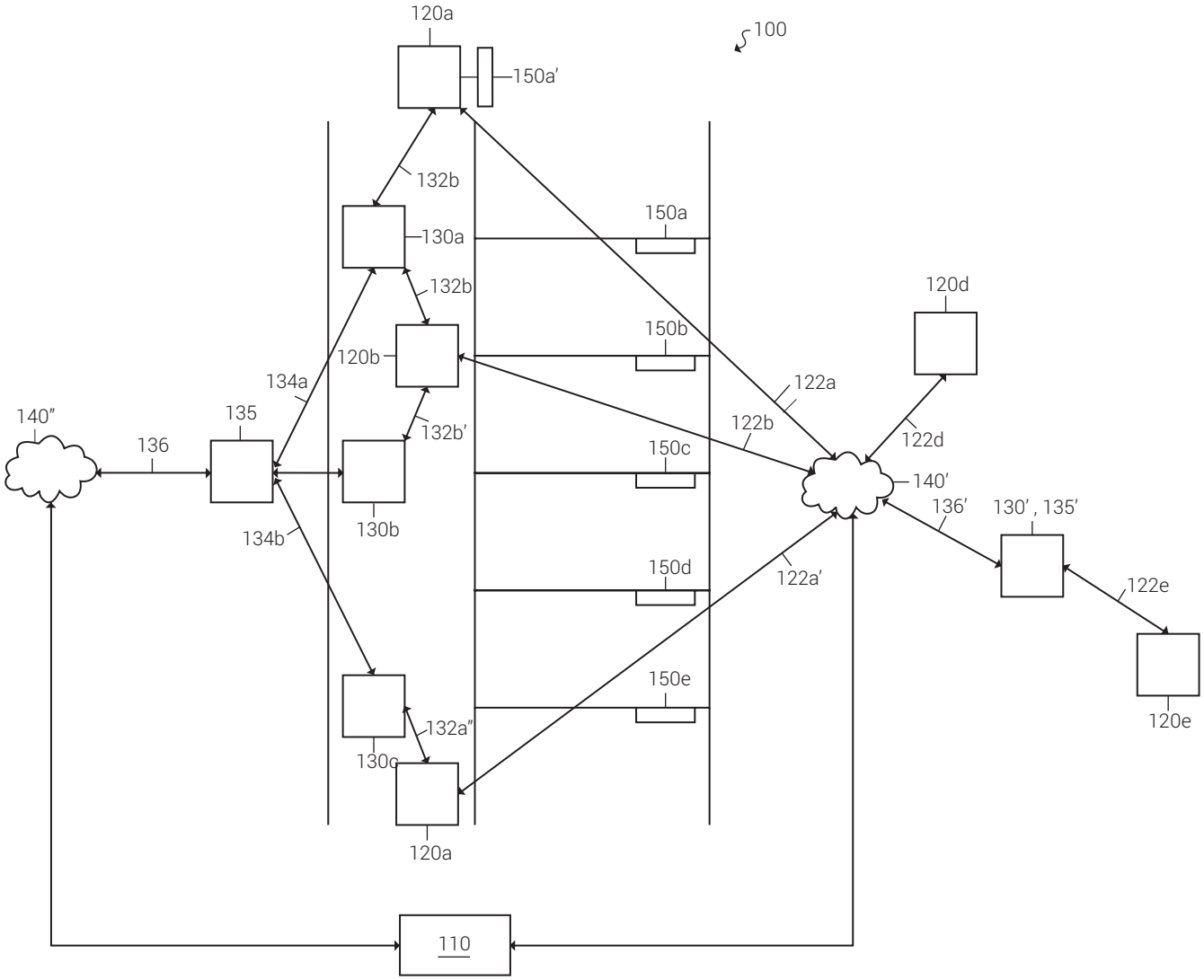
120a
100
150a'
132b
150a
130a
132b
120d
150b
120b
134a
122a
140"
135
132b'
122b
122d
136
150c
140'
130b
134b
136'
130', 135'
150d
122a'
122e
150e
132a"
130c
120e
120a
110

Figure 3

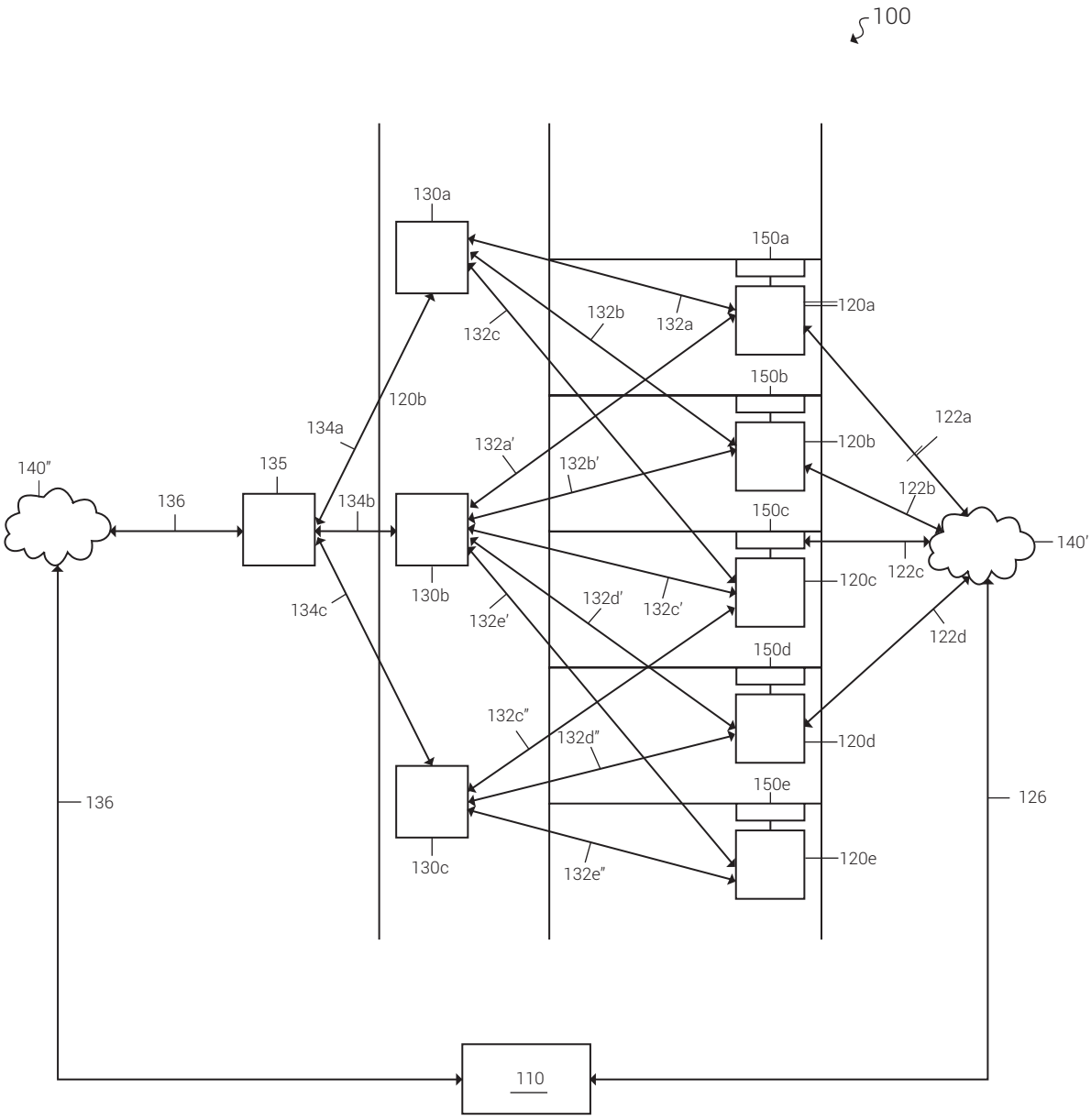
100
130a
150a
120a
132b
132a
132c
150b
120b
122a
134a
132a'
132b'
140″
135
136
134b
122b
150c
140′
122c
120c
130b
132d'
132c'
134c
132e'
122d
150d
132c″
132d″
120d
150e
136
126
130c
132e″
120e
110

Figure 4

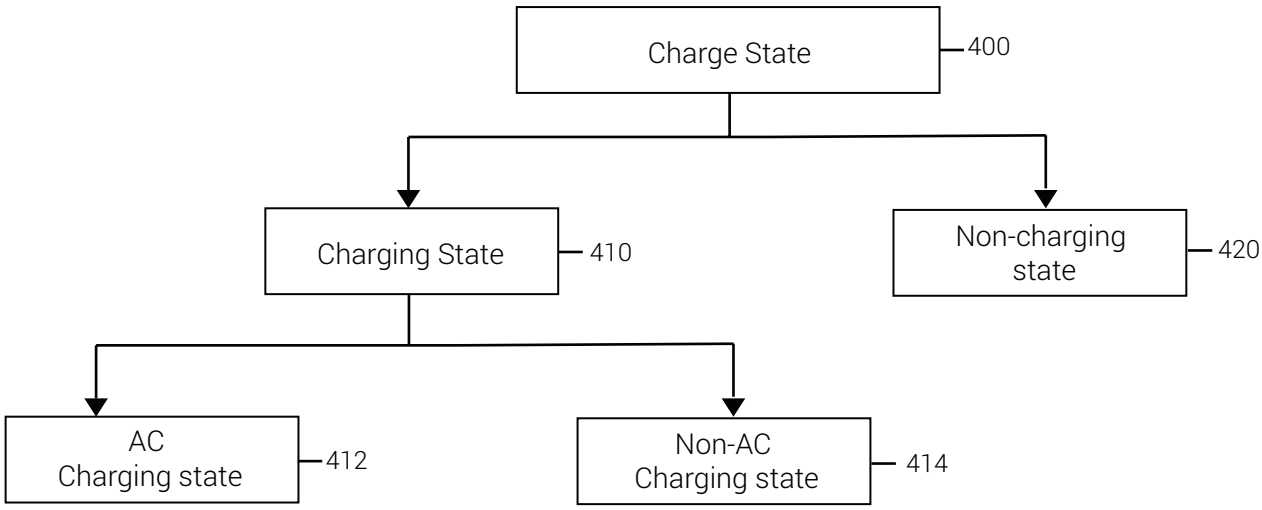
Charge State
400
Charging State
410
Non-charging state
420
AC Charging state
412
Non-AC Charging state
414

Figure 5

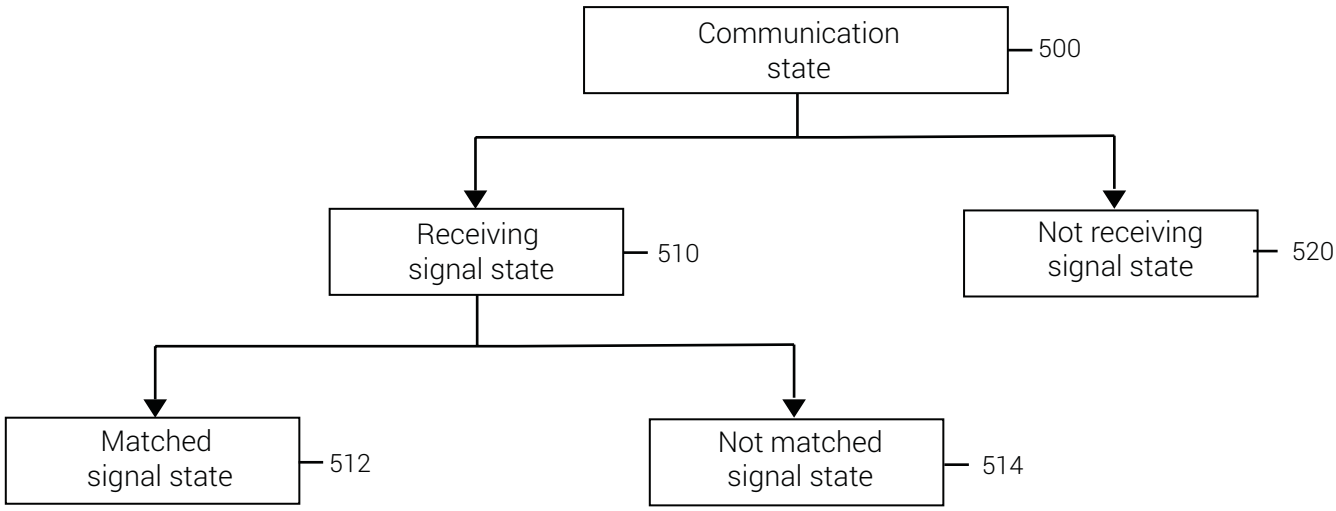
Communication state
500
Receiving signal state
510
Not receiving signal state
520
Matched signal state
512
Not matched signal state
514

Figure 6

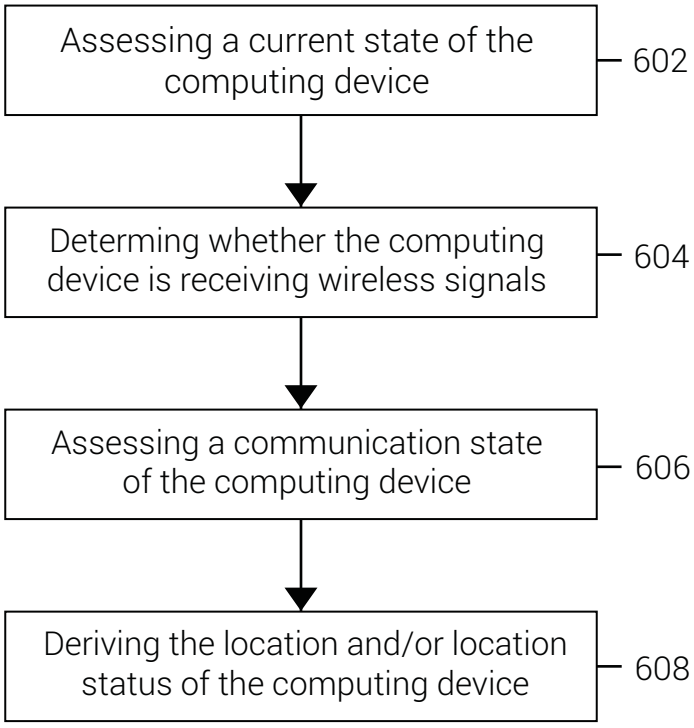
Assessing a current state of the computing device
602
Determing whether the computing device is receiving wireless signals
604
Assessing a communication state of the computing device
606
Deriving the location and/or location status of the computing device
608

Figure 7

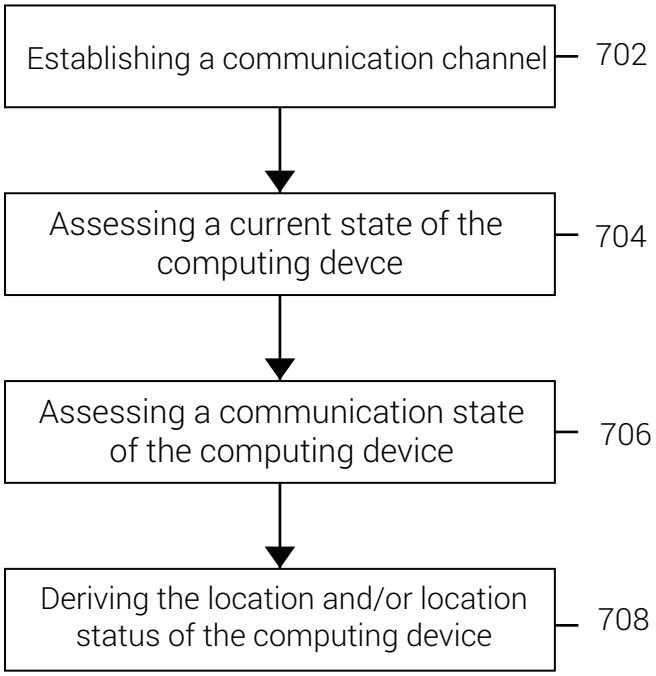
Establishing a communication channel
702
Assessing a current state of the computing devce
704
Assessing a communication state of the computing device
706
Deriving the location and/or location status of the computing device
708