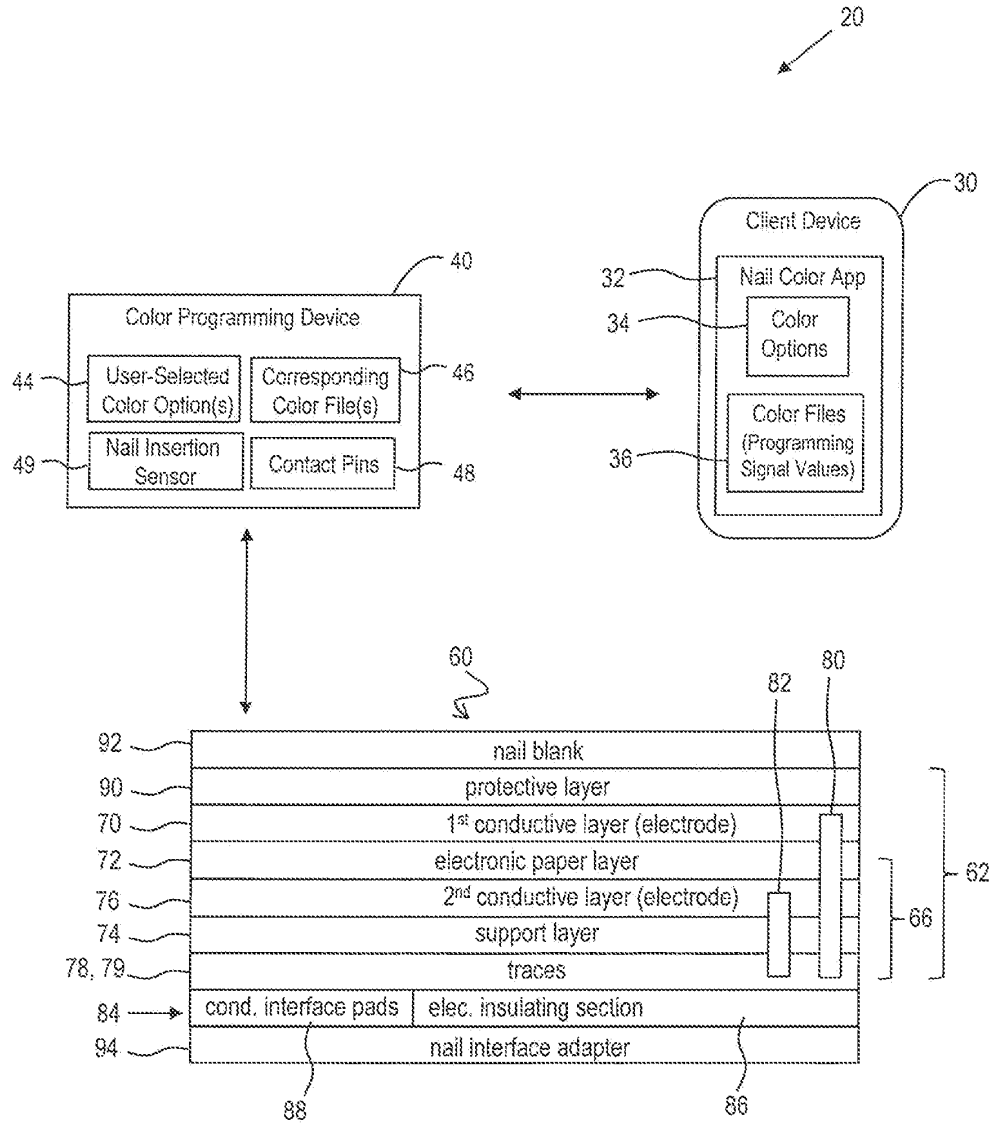
20
30
Client Device
32
Nail Color App
34
Color Options
Color Files (Programming Signal Values)
36
40
Color Programming Device
44
User-Selected Color Option(s)
Corresponding Color File(s)
46
49
Nail Insertion Sensor
Contact Pins
48
60
82
80
92
nail blank
90
protective layer
70
1st conductive layer (electrode)
72
electronic paper layer
76
2nd conductive layer (electrode)
74
support layer
78, 79
traces
62
66
84
cond. interface pads
elec. insulating section
94
nail interface adapter
88
86

FIG. 1

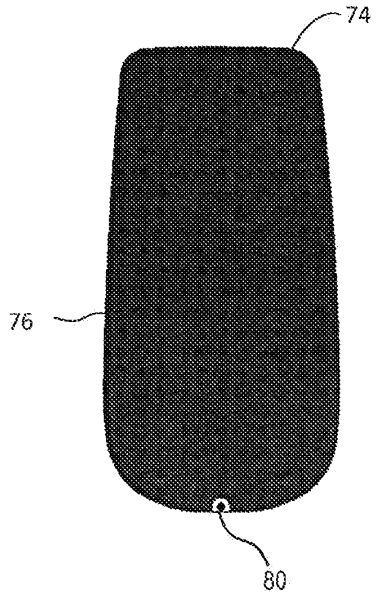


FIG. 2A

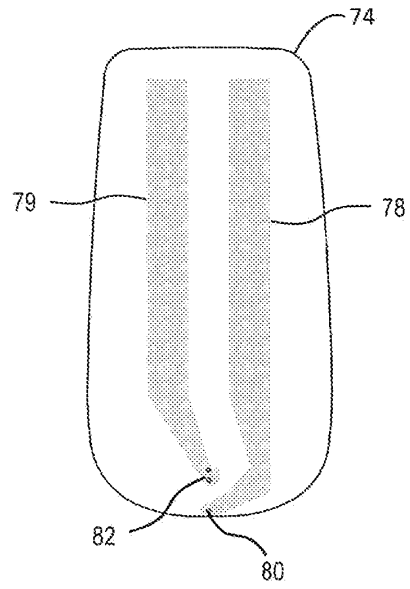


FIG. 2B

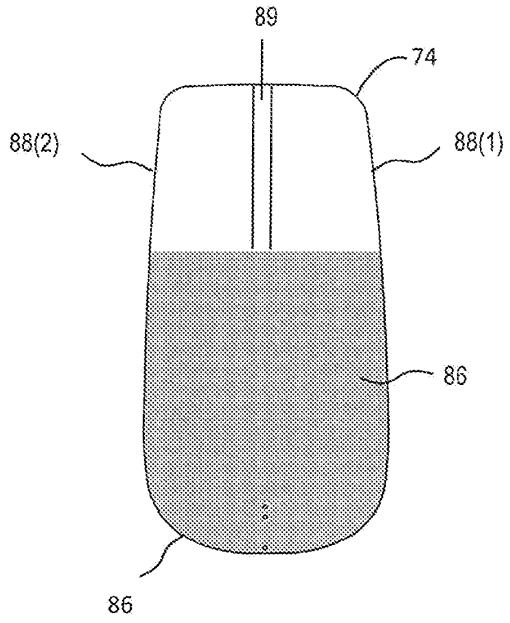


FIG. 2C

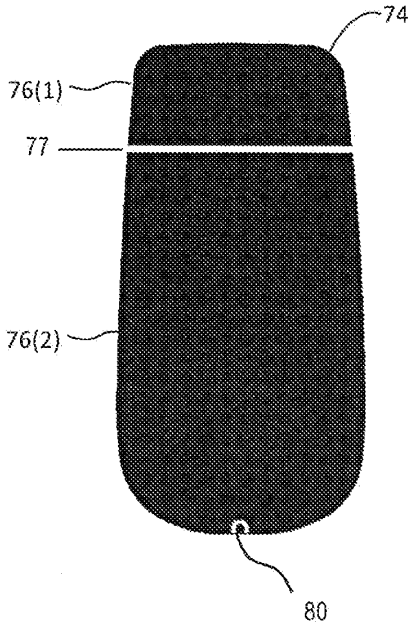


FIG. 3A

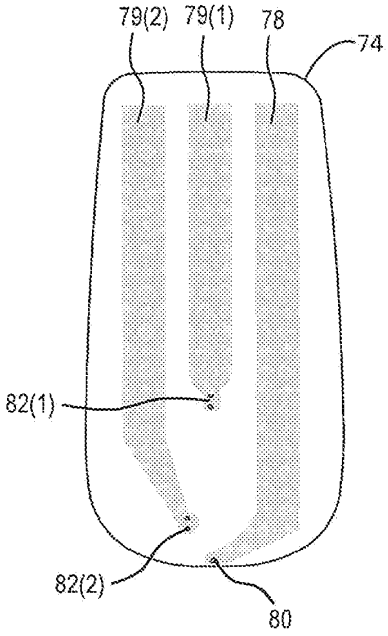


FIG. 3B

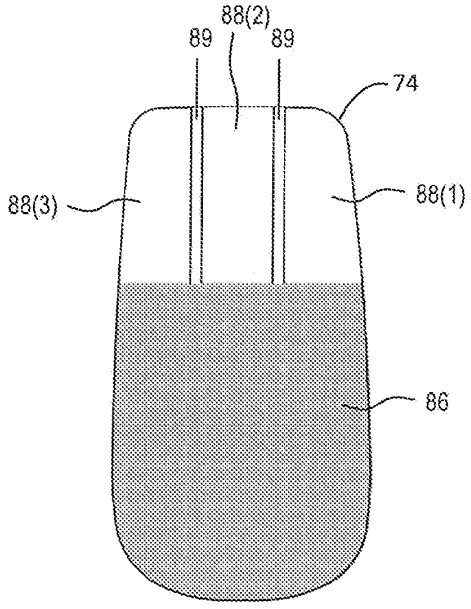


FIG. 3C

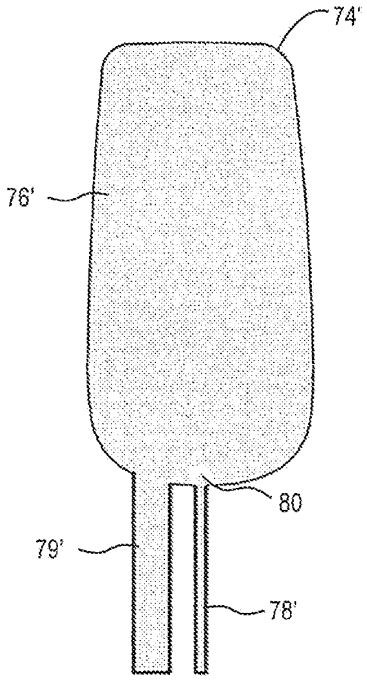


FIG. 4

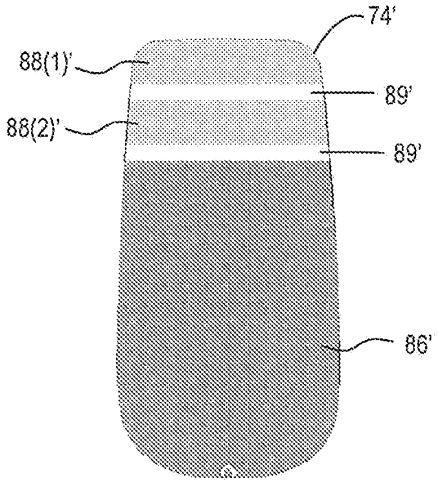


FIG. 5

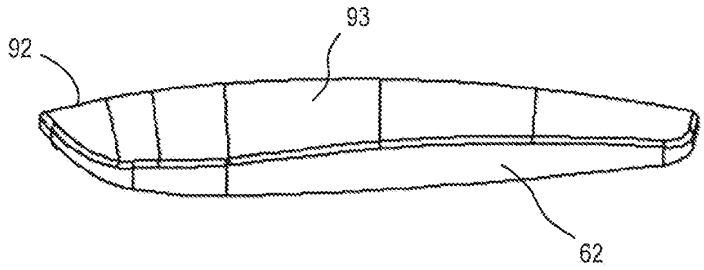


FIG. 6A

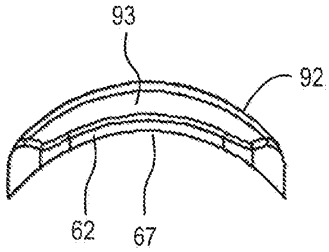


FIG. 6C

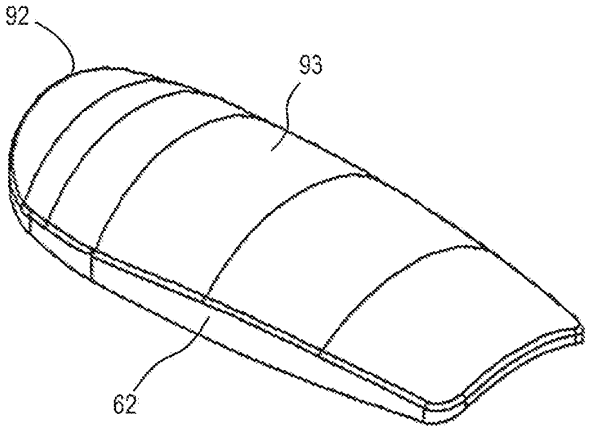


FIG. 6B

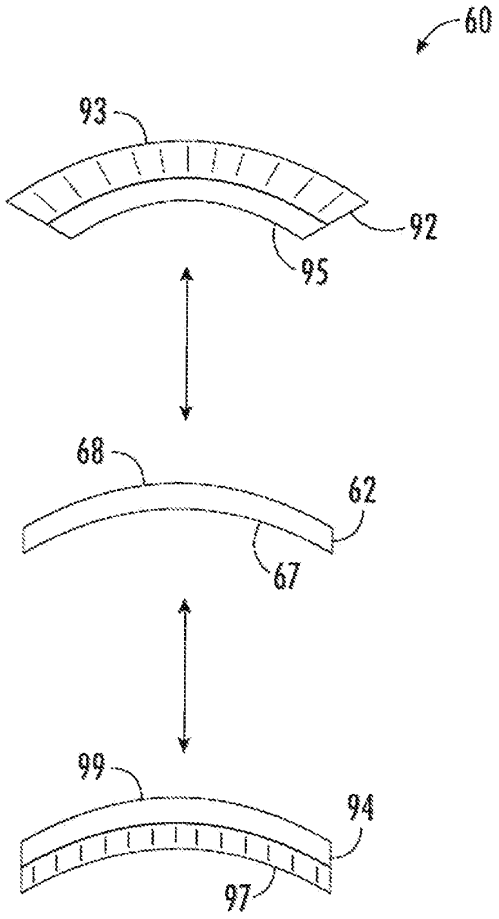


FIG. 7

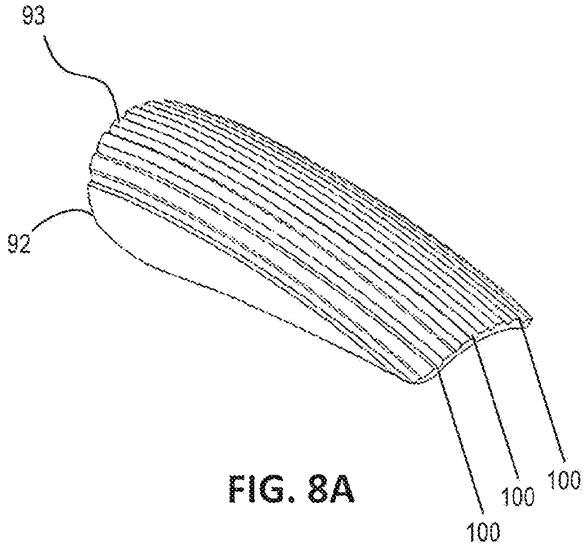


FIG. 8A

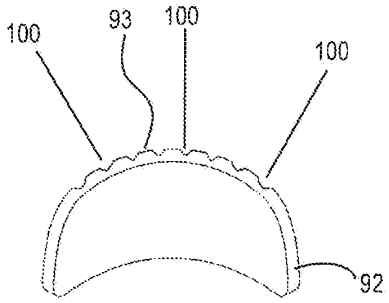


FIG. 8B

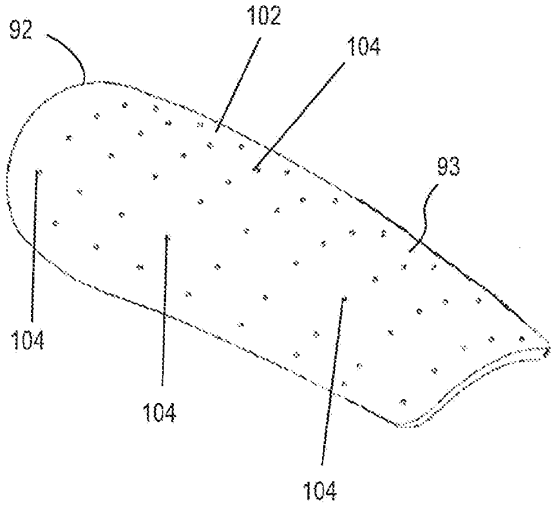


FIG. 9A

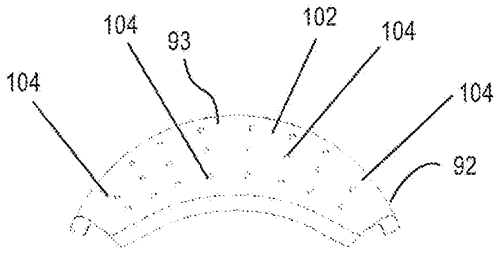


FIG. 9B

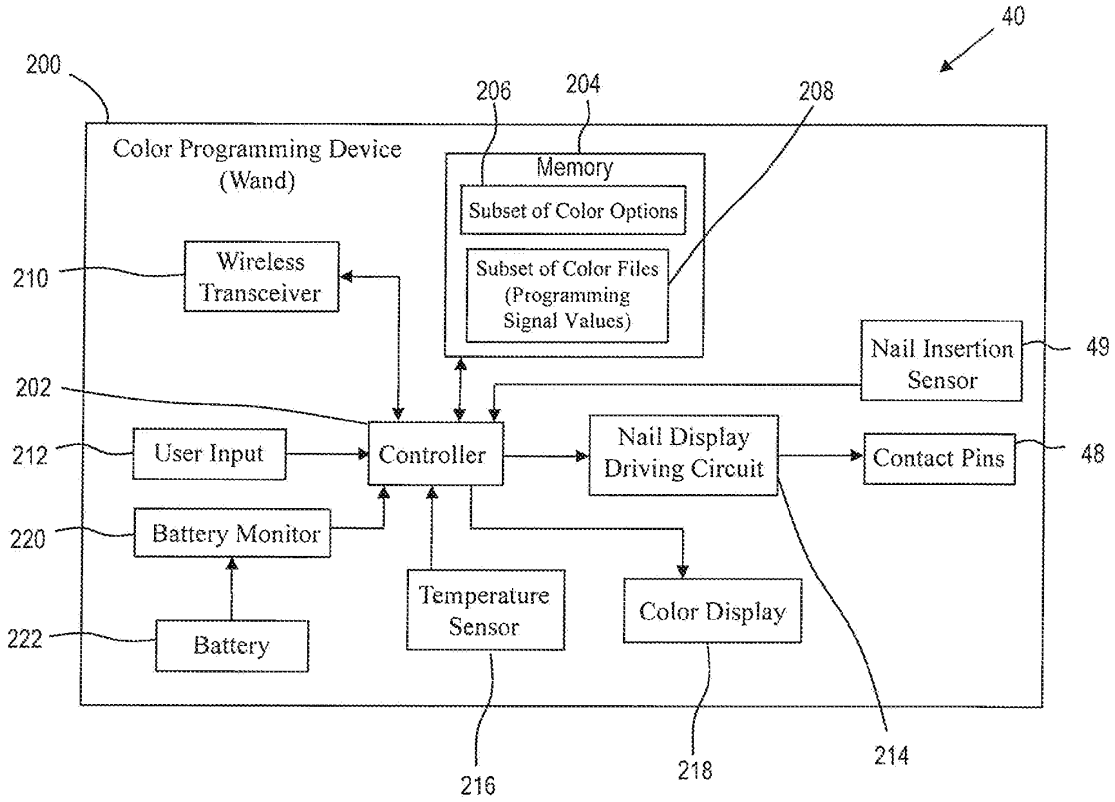


FIG. 10A

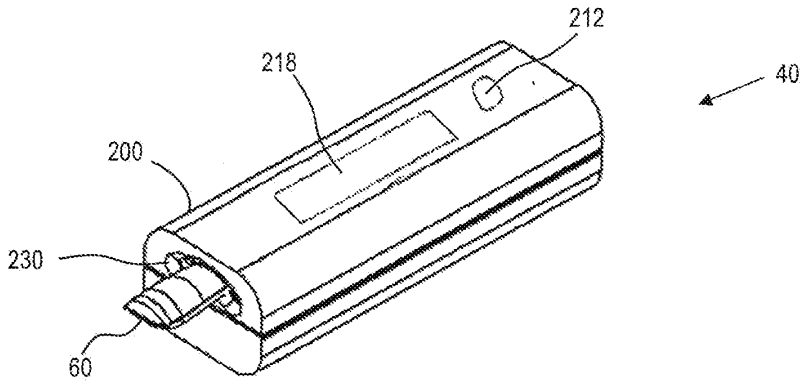


FIG. 10B

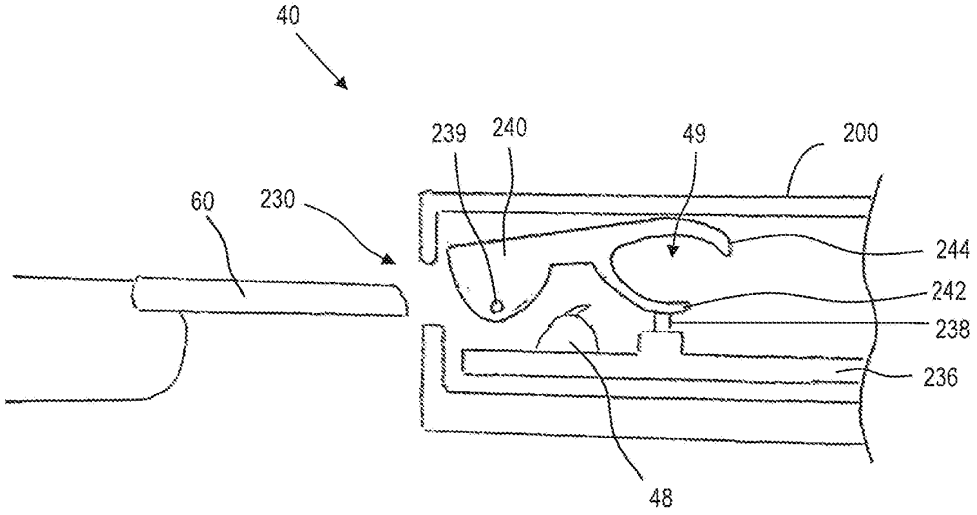


FIG. 11A

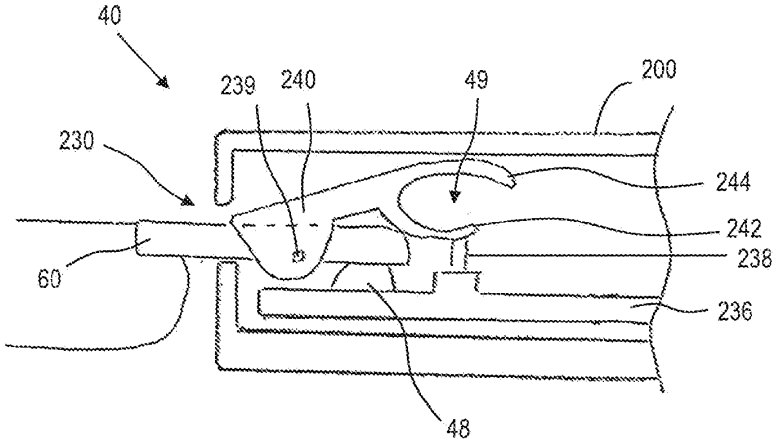


FIG. 11B

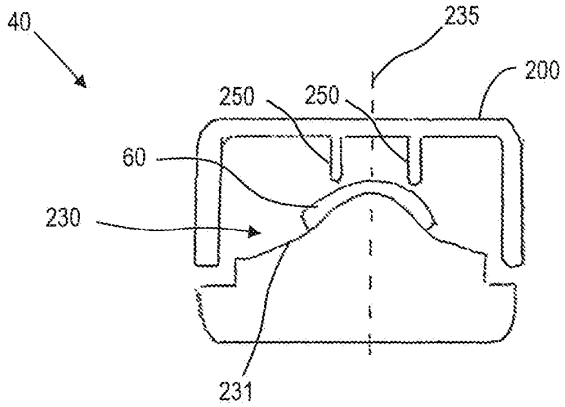


FIG. 12A

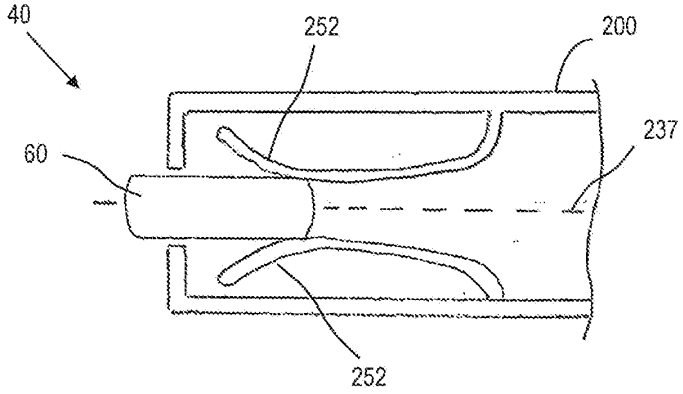


FIG. 12B

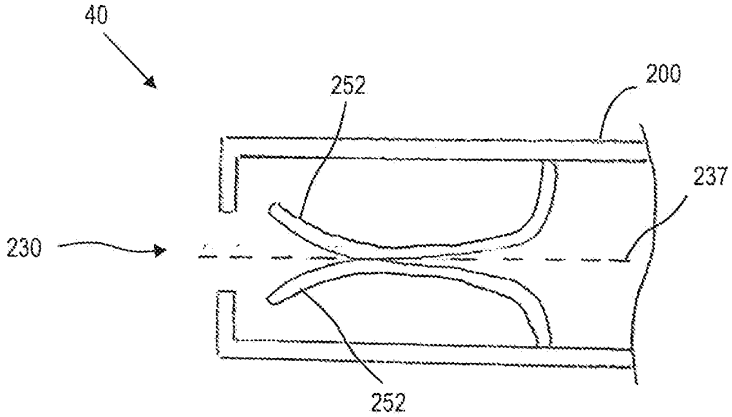


FIG. 12C

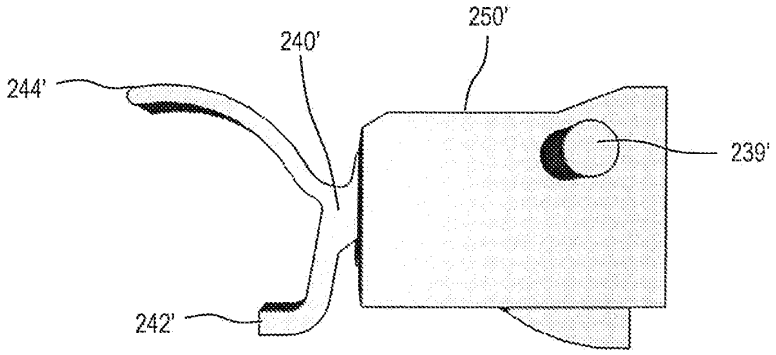


FIG. 13A

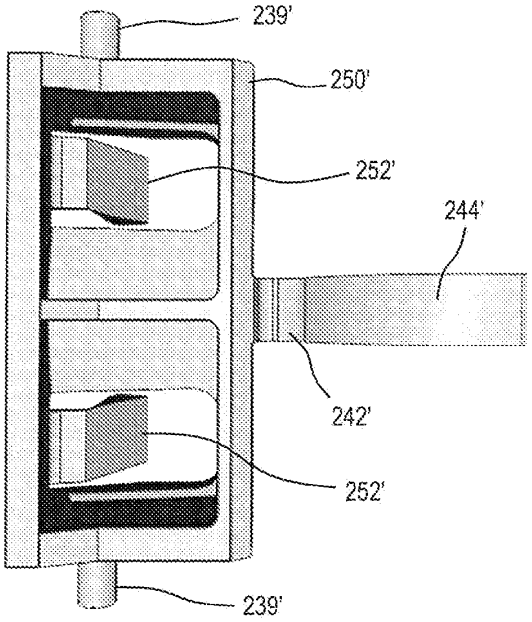


FIG. 13B

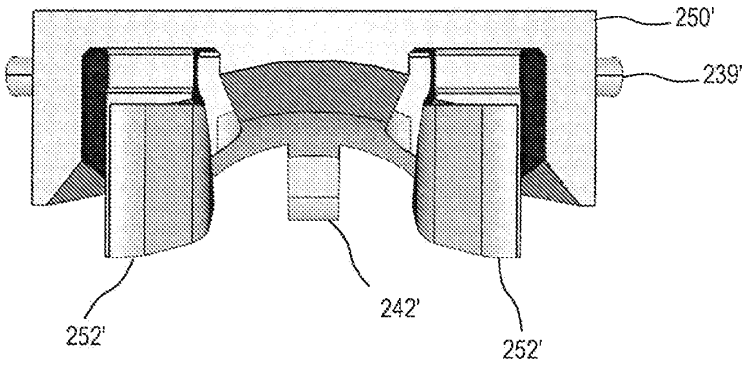


FIG. 13C

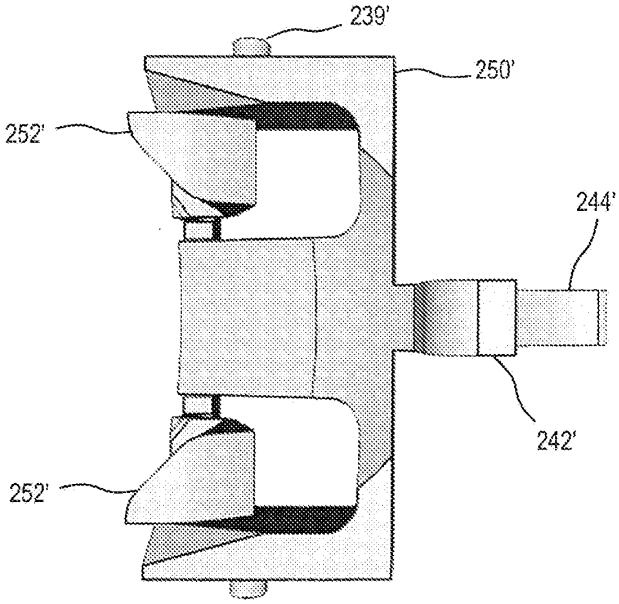


FIG. 13D

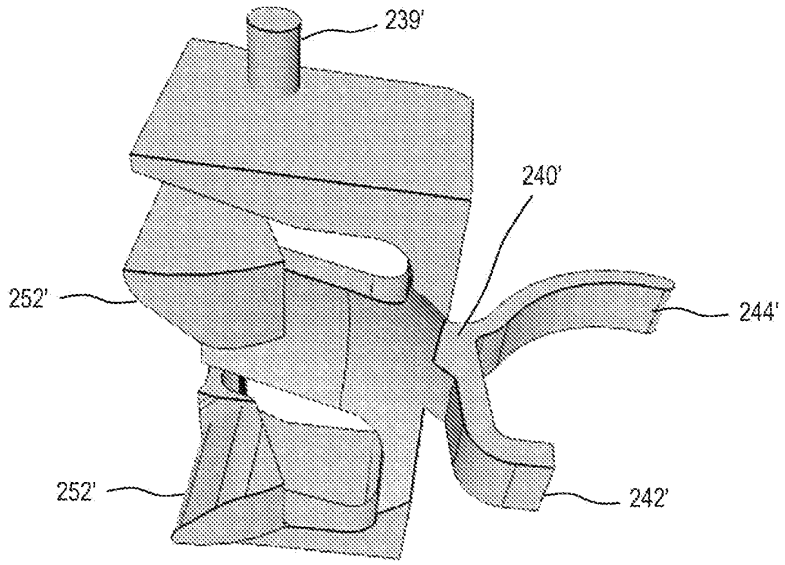


FIG. 13E

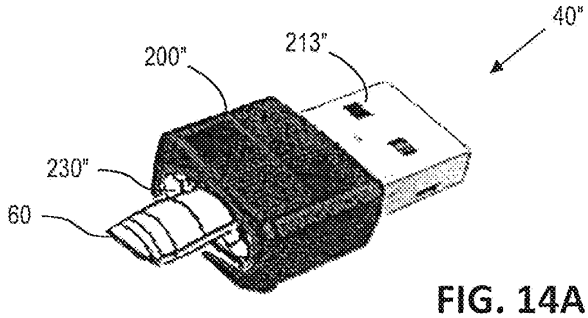


FIG. 14A

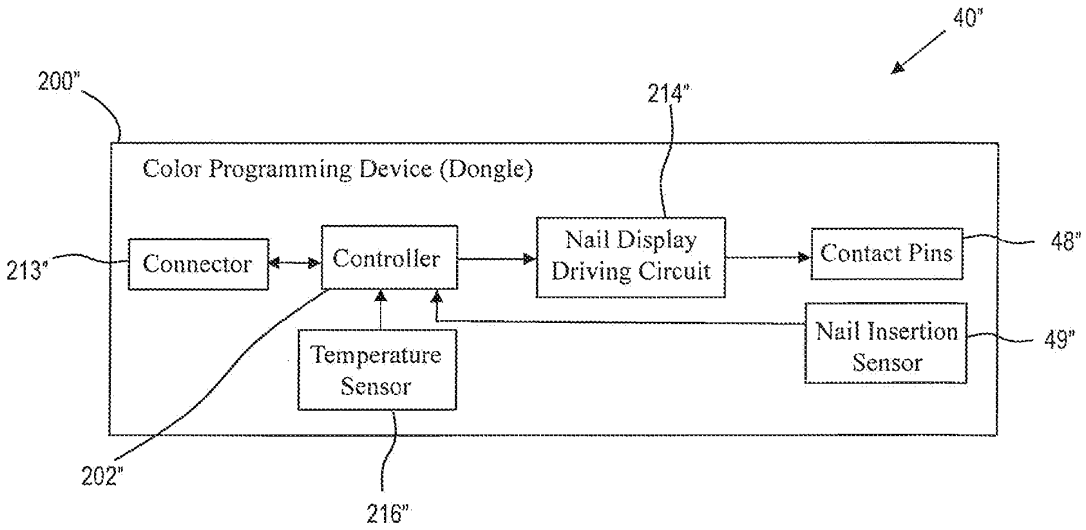


FIG. 14B

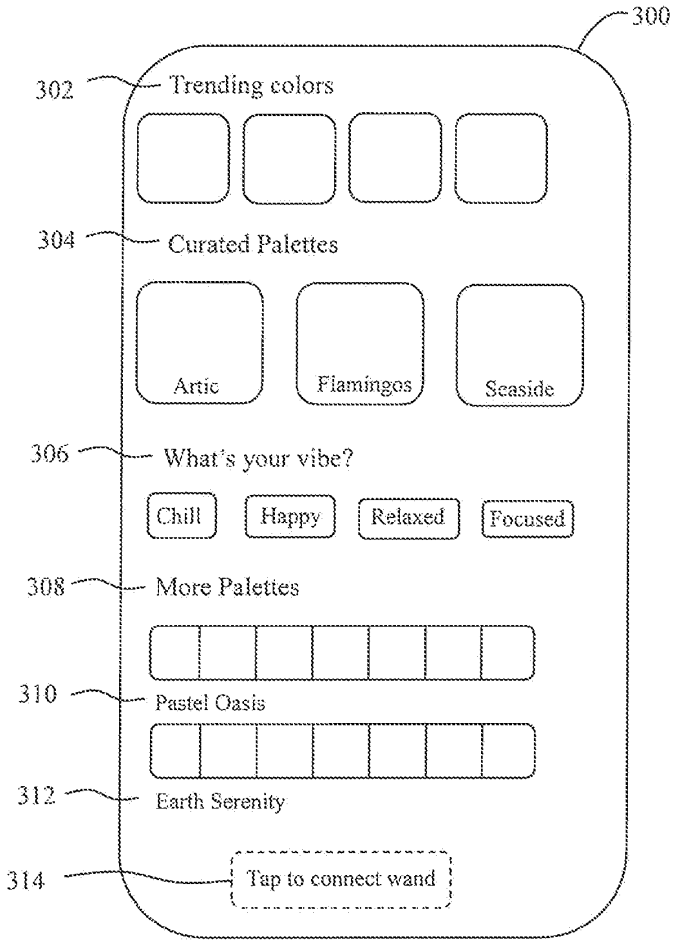
300
302
Trending colors
304
Curated Palettes
Artic
Flamingos
Seaside
306
What's your vibe?
Chill
Happy
Relaxed
Focused
308
More Palettes
310
Pastel Oasis
312
Earth Serenity
314
Tap to connect wand

FIG. 15A

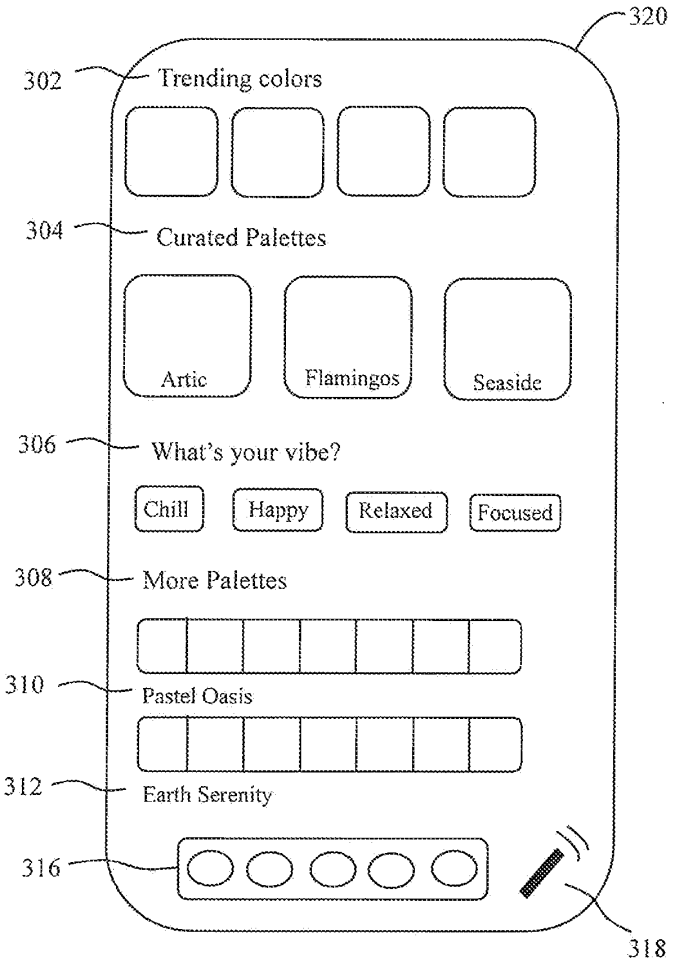
320
302
Trending colors
304
Curated Palettes
Artic
Flamingos
Seaside
306
What's your vibe?
Chill
Happy
Relaxed
Focused
308
More Palettes
310
Pastel Oasis
312
Earth Serenity
316
318

FIG. 15B

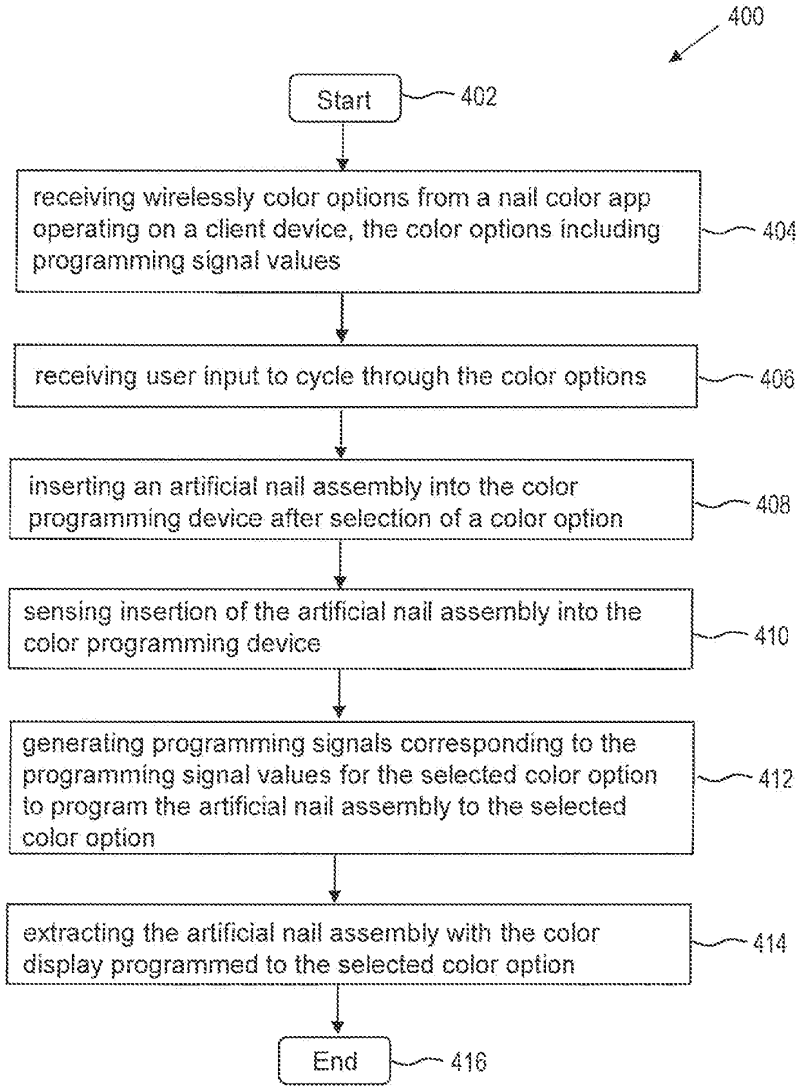
400
Start
402
receiving wirelessly color options from a nail color app operating on a client device, the color options including programming signal values
404
receiving user input to cycle through the color options
406
inserting an artificial nail assembly into the color programming device after selection of a color option
408
sensing insertion of the artificial nail assembly into the color programming device
410
generating programming signals corresponding to the programming signal values for the selected color option to program the artificial nail assembly to the selected color option
412
extracting the artificial nail assembly with the color display programmed to the selected color option
414
End
416

FIG. 16

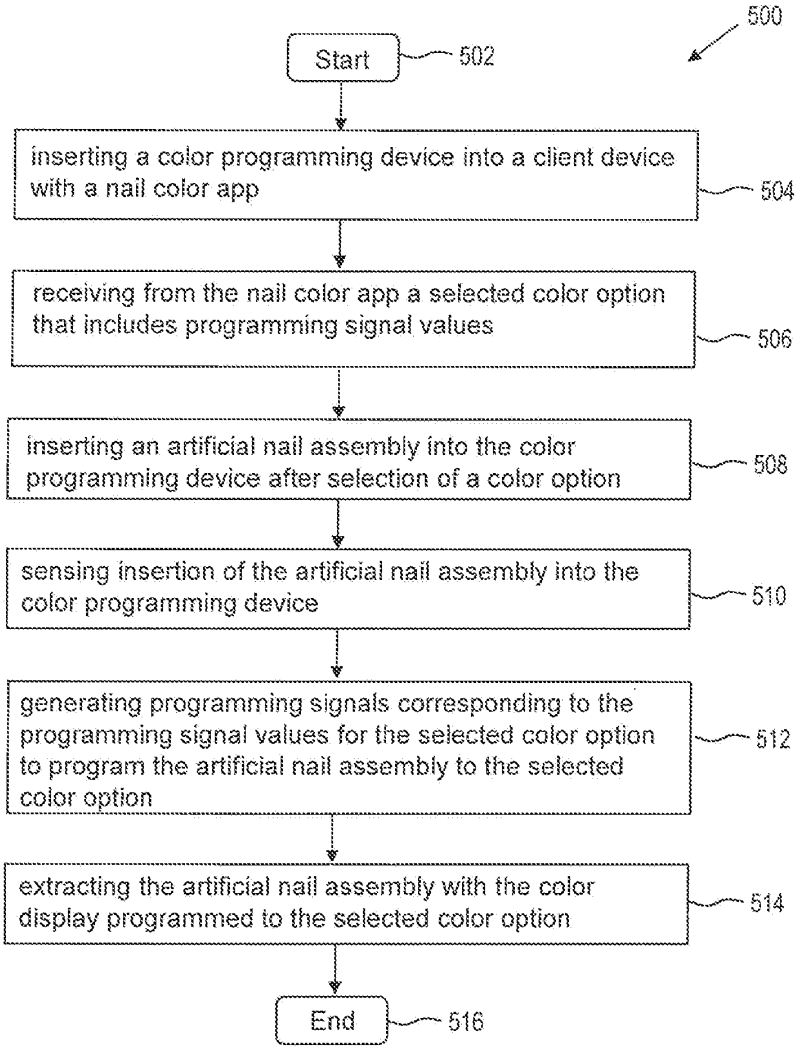
500
Start
502
inserting a color programming device into a client device with a nail color app
504
receiving from the nail color app a selected color option that includes programming signal values
506
inserting an artificial nail assembly into the color programming device after selection of a color option
508
sensing insertion of the artificial nail assembly into the color programming device
510
generating programming signals corresponding to the programming signal values for the selected color option to program the artificial nail assembly to the selected color option
512
extracting the artificial nail assembly with the color display programmed to the selected color option
514
End
516

FIG. 17