(12) INTERNATIONAL APPLICATION PUBLISHED UNDER THE PATENT COOPERATION TREATY (PCT)

(19) World Intellectual Property Organization
International Bureau

(43) International Publication Date
6 October 2011 (06.10.2011)

PCT

(10) International Publication Number
WO 2011/123058 A1

(51) International Patent Classification:
E04C 2/26 (2006.01) *E04B 1/90* (2006.01)
E04B 1/94 (2006.01) *E04C 2/288* (2006.01)
E04C 2/34 (2006.01)

(21) International Application Number:
PCT/SG2010/000126

(22) International Filing Date:
30 March 2010 (30.03.2010)

(25) Filing Language: English

(26) Publication Language: English

(71) Applicant *(for all designated States except US)*: **HOUSING & DEVELOPMENT BOARD** [SG/SG]; HDB Hub, 480 Lorong 6, Toa Payoh, Singapore 310480 (SG).

(72) Inventors; and

(75) Inventors/Applicants *(for US only)*: **LAU, Joo Ming** [SG/SG]; Housing & Development Board, HDB Hub, 480 Lorong 6, Toa Payoh, Singapore 310480 (SG). **HERU, Santoso Soedarsono** [SG/SG]; Housing & Development Board, HDB Hub, 480 Lorong 6, Toa Payoh, Singapore 310480 (SG). **OH, Guek Hoon** [SG/SG]; Housing & Development Board, HDB Hub, 480 Lorong 6, Toa Payoh, Singapore 310480 (SG).

(74) Agent: **LEE, Ai Ming**; Rodyk & Davidson LLP, 80 Raffles Place #33-00 UOB Plaza 1, Singapore 048624 (SG).

(81) Designated States *(unless otherwise indicated, for every kind of national protection available)*: AE, AG, AL, AM, AO, AT, AU, AZ, BA, BB, BG, BH, BR, BW, BY, BZ, CA, CH, CL, CN, CO, CR, CU, CZ, DE, DK, DM, DO, DZ, EC, EE, EG, ES, FI, GB, GD, GE, GH, GM, GT, HN, HR, HU, ID, IL, IN, IS, JP, KE, KG, KM, KN, KP, KR, KZ, LA, LC, LK, LR, LS, LT, LU, LY, MA, MD, ME, MG, MK, MN, MW, MX, MY, MZ, NA, NG, NI, NO, NZ, OM, PE, PG, PH, PL, PT, RO, RS, RU, SC, SD, SE, SG, SK, SL, SM, ST, SV, SY, TH, TJ, TM, TN, TR, TT, TZ, UA, UG, US, UZ, VC, VN, ZA, ZM, ZW.

[Continued on next page]

WO 2011/123058 A1

(54) Title: A WALL SECTION

FIG 1

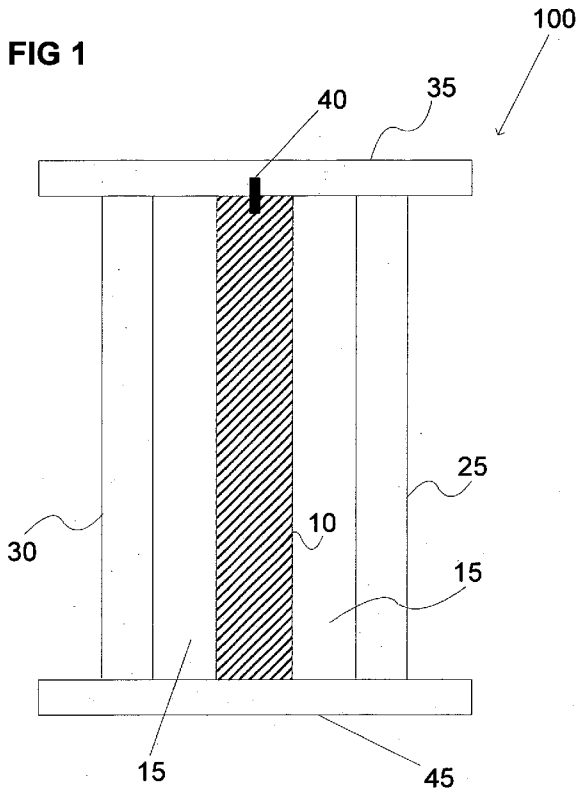

(57) Abstract: A wall section for use as party walls in apartment buildings and commercial buildings is disclosed. The wall section comprises a ferro concrete member disposed between a first sideboard and a second sideboard. The first sideboard and the second sideboard may be mechanically fastened to the ferro concrete member. Alternatively, they may also be fastened to the ferro concrete member using chemical adhesives. A gap between the ferro concrete member and one or more of the first and the second sideboards may be filled with insulation material. The sideboards may comprise any one of dry board, fibreglass, cement boards or recycled dry boards. Moreover, the ferro concrete member may comprise a cavity.

(84) **Designated States** *(unless otherwise indicated, for every kind of regional protection available)*: ARIPO (BW, GH, GM, KE, LR, LS, MW, MZ, NA, SD, SL, SZ, TZ, UG, ZM, ZW), Eurasian (AM, AZ, BY, KG, KZ, MD, RU, TJ, TM), European (AT, BE, BG, CH, CY, CZ, DE, DK, EE, ES, FI, FR, GB, GR, HR, HU, IE, IS, IT, LT, LU, LV, MC, MK, MT, NL, NO, PL, PT, RO, SE, SI, SK, SM, TR), OAPI (BF, BJ, CF, CG, CI, CM, GA, GN, GQ, GW, ML, MR, NE, SN, TD, TG).

Declarations under Rule 4.17:

— *as to applicant's entitlement to apply for and be granted a patent (Rule 4.17(ii))*

Published:

— *with international search report (Art. 21(3))*