Fig.1

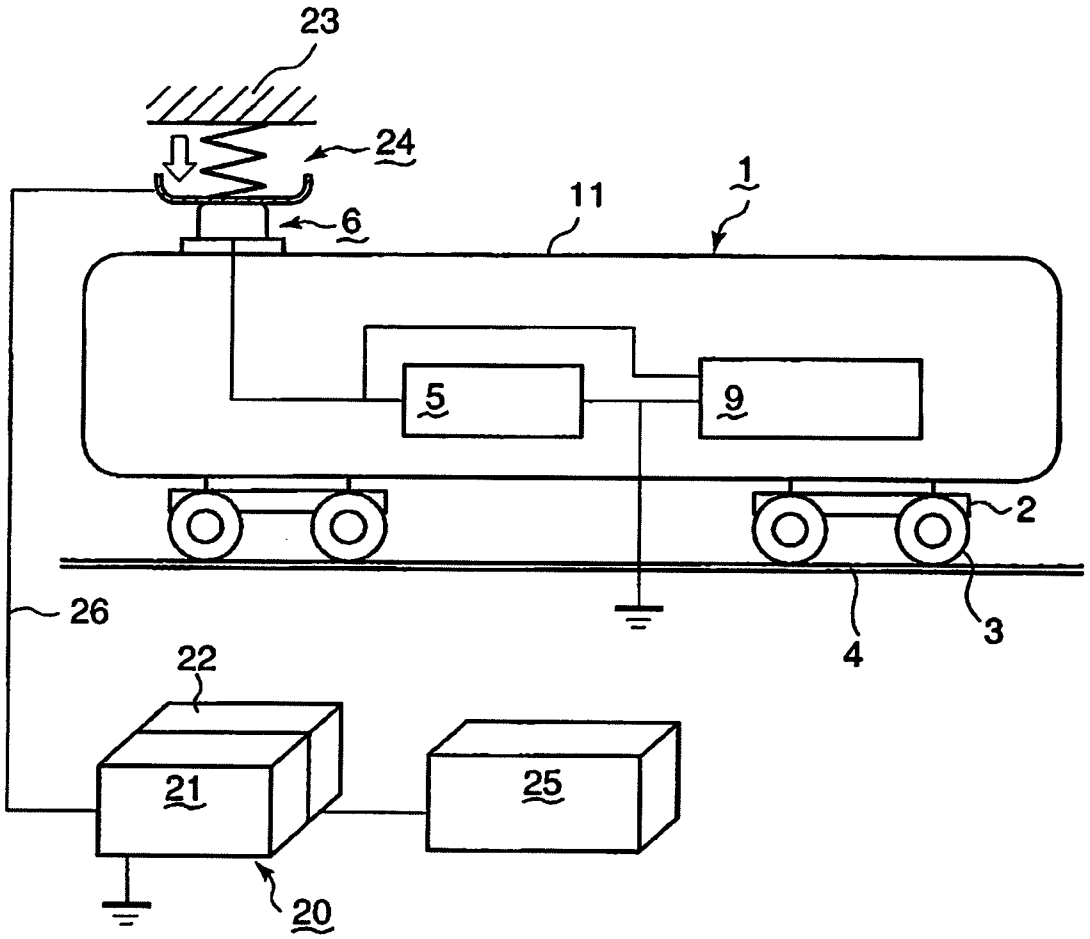

Fig.2

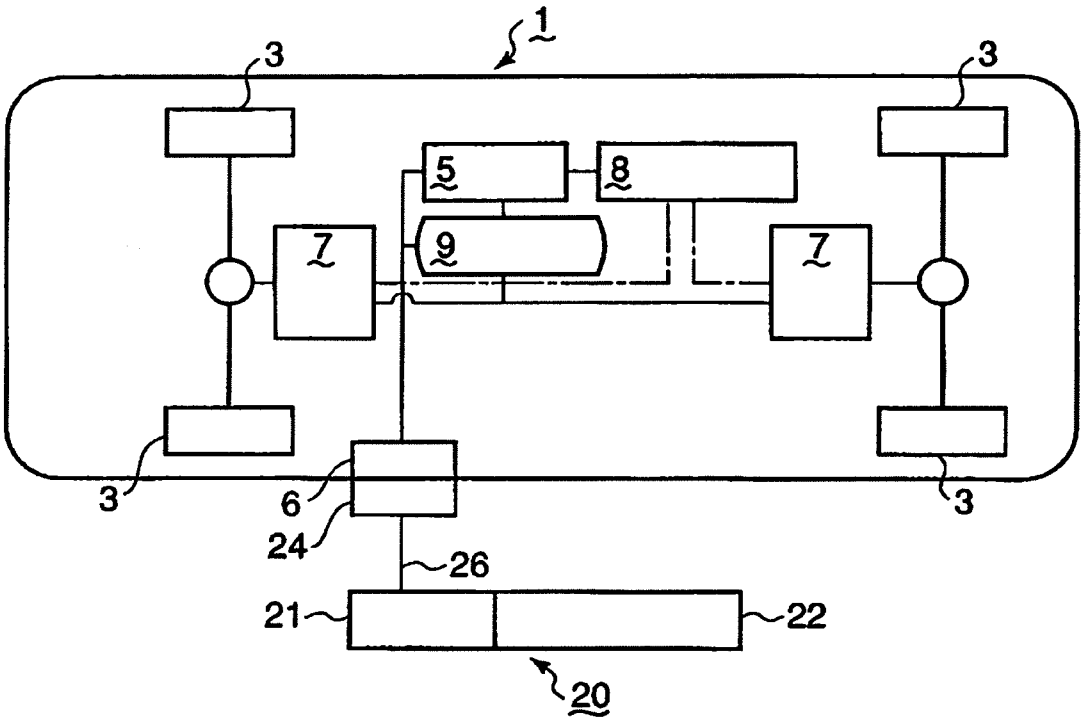
1
3
3
5
8
7
9
7
3
6
3
24
26
21
22
20

Fig.3

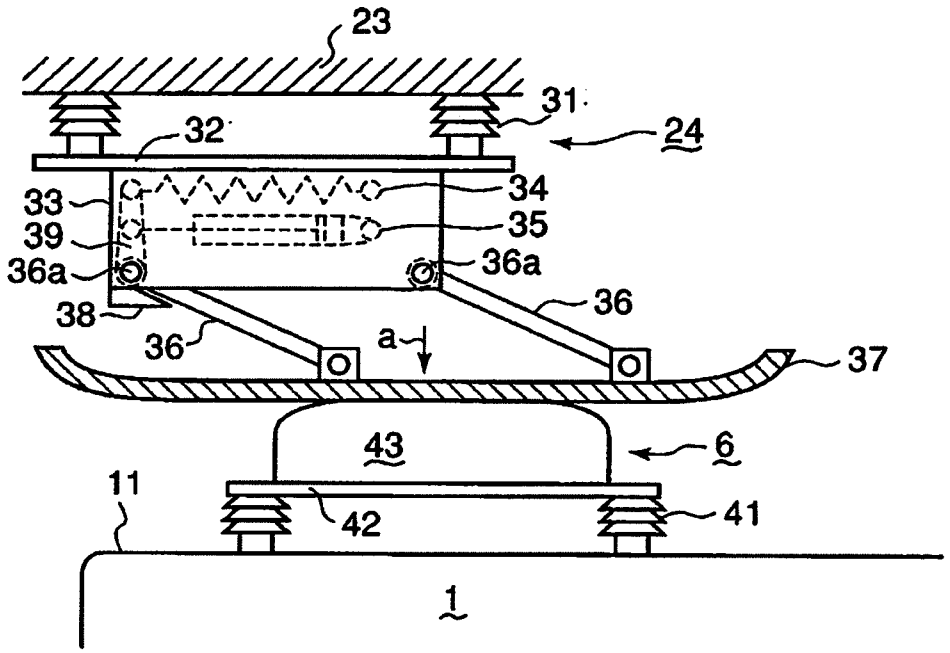
23
31
32
24
33
34
39
35
36a
36a
38
36
36
a
37
43
6
11
42
41
1

Fig.4

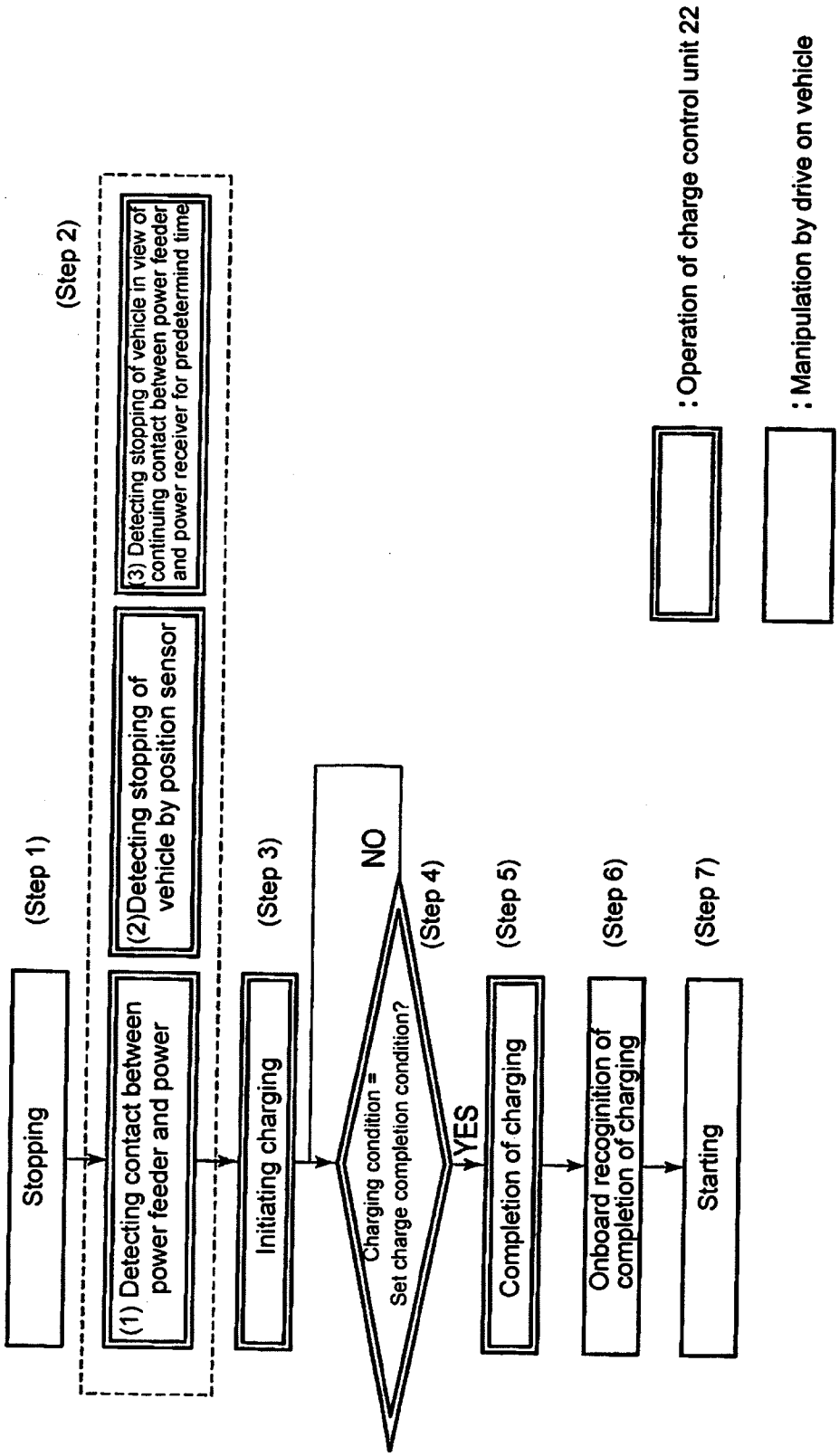
Stopping
(Step 1)
(Step 2)
(1) Detecting contact between power feeder and power
(2)Detecting stopping of vehicle by position sensor
(3) Detecting stopping of vehicle in view of continuing contact between power feeder and power receiver for predetermind time
Initiating charging
(Step 3)
Charging condition = Set charge completion condition?
NO
YES
(Step 4)
Completion of charging
(Step 5)
Onboard recoginition of completion of charging
(Step 6)
Starting
(Step 7)
: Operation of charge control unit 22
: Manipulation by drive on vehicle

Fig. 5

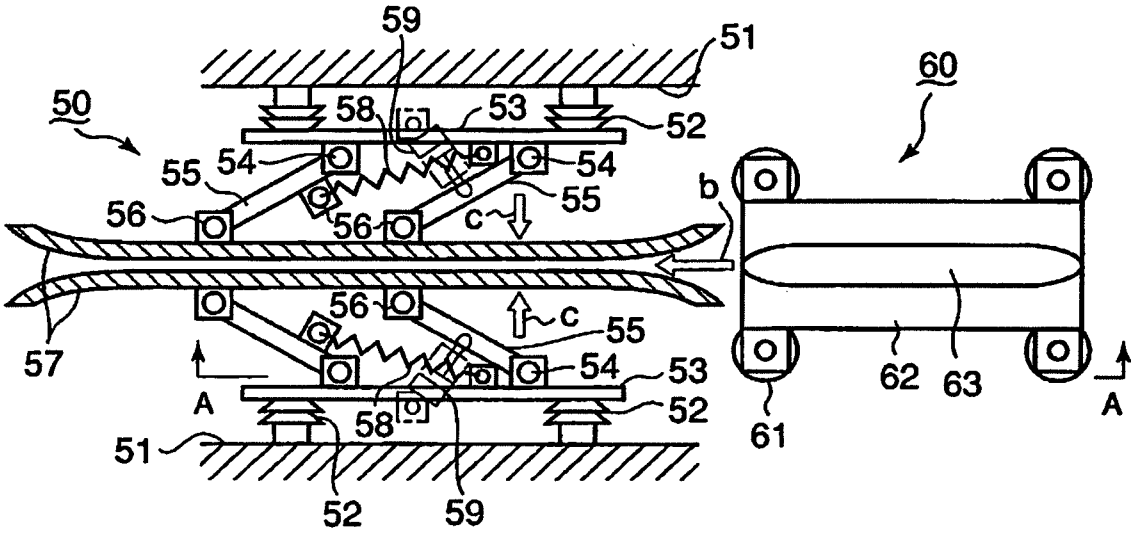
59
51
60
50
58
53
52
55
54
54
55
56
56
c
b
57
56
c
55
54
53
A
58
52
51
52
59
62
63
61
A

Fig.6

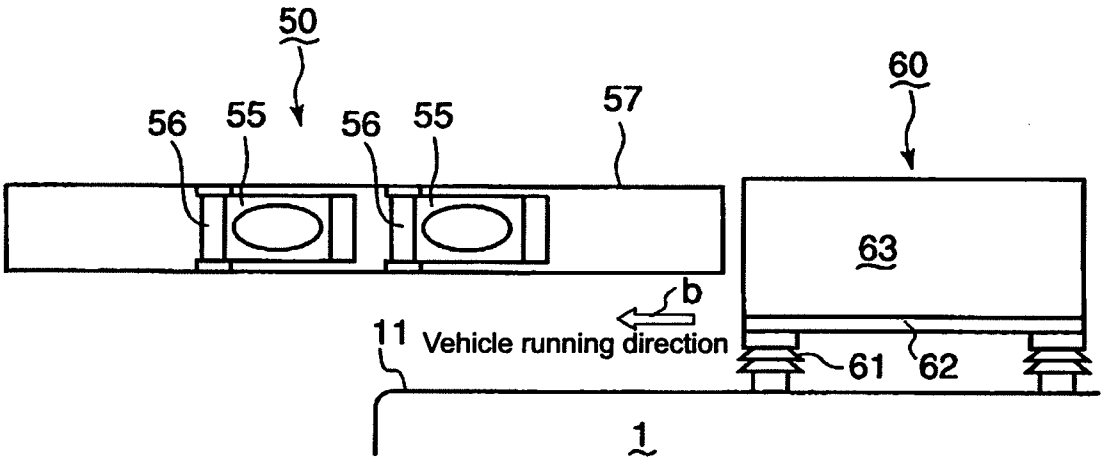
50
60
56
55
56
55
57
63
b
11
Vehicle running direction
61
62
1

Fig.7

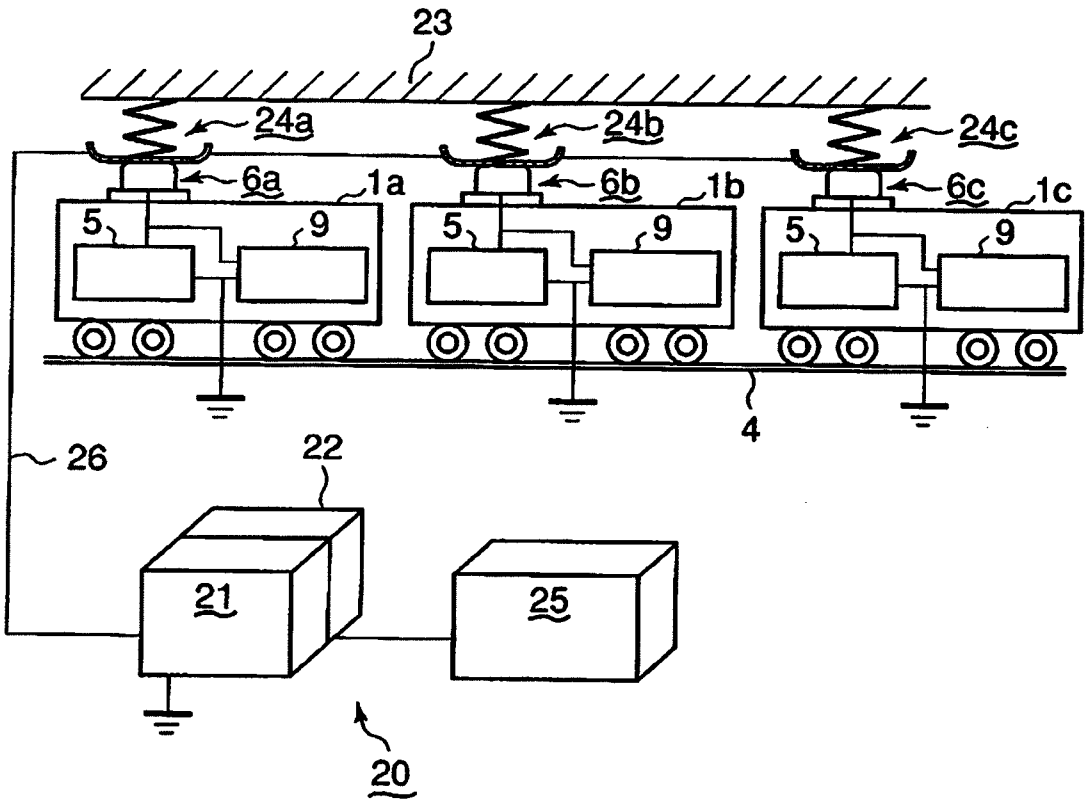
23
24a
24b
24c
6a
1a
6b
1b
6c
1c
5
9
4
26
22
21
25
20

Fig.8

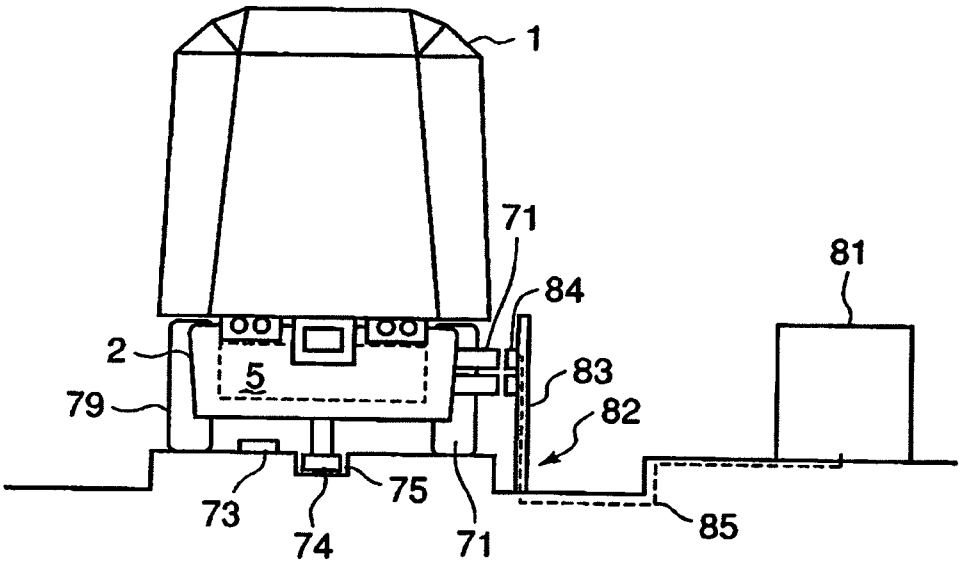
1
71
84
81
2
5
83
79
82
73
74
75
71
85