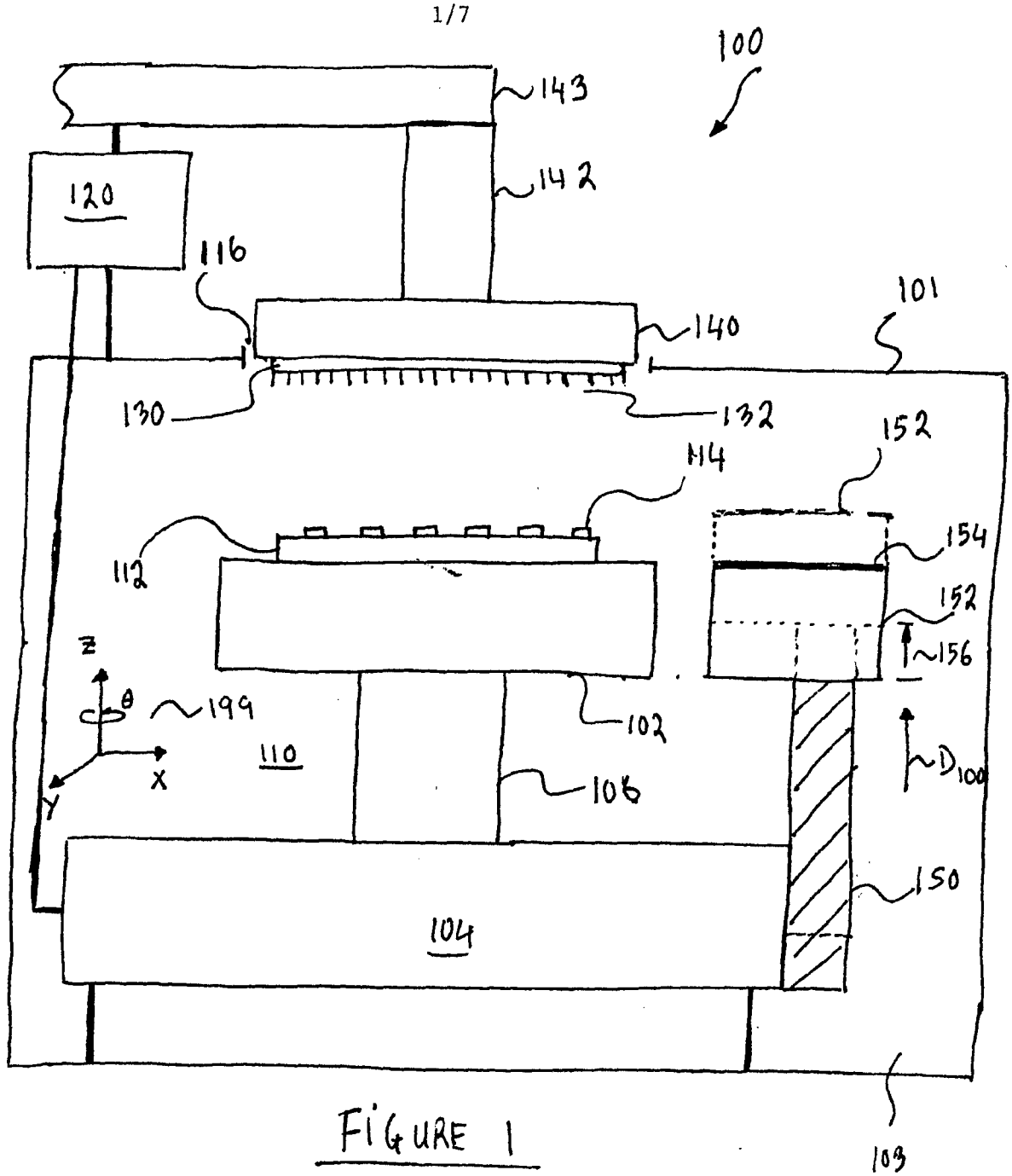
100
143
142
120
116
140
101
130
132
152
114
112
154
152
156
Z
θ
199
102
110
X
Y
106
D100
150
104
103

FIGURE 1

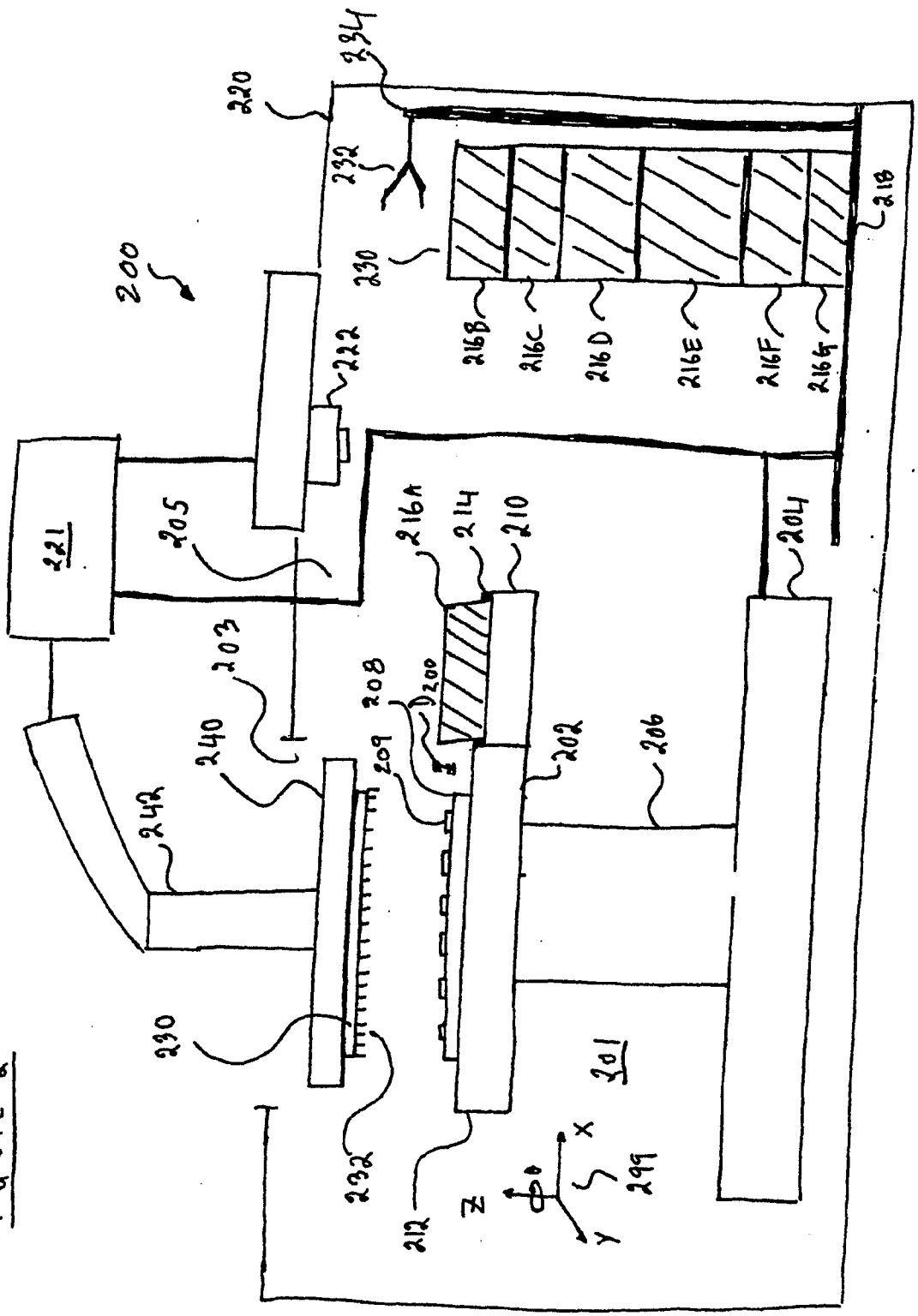
200
220
234
232
218
230
216B
216C
216D
216E
216F
216G
222
221
205
216A
214
210
204
203
208
209
240
202
206
242
230
232
212
201
299
Z
X
Y

FIGURE 2

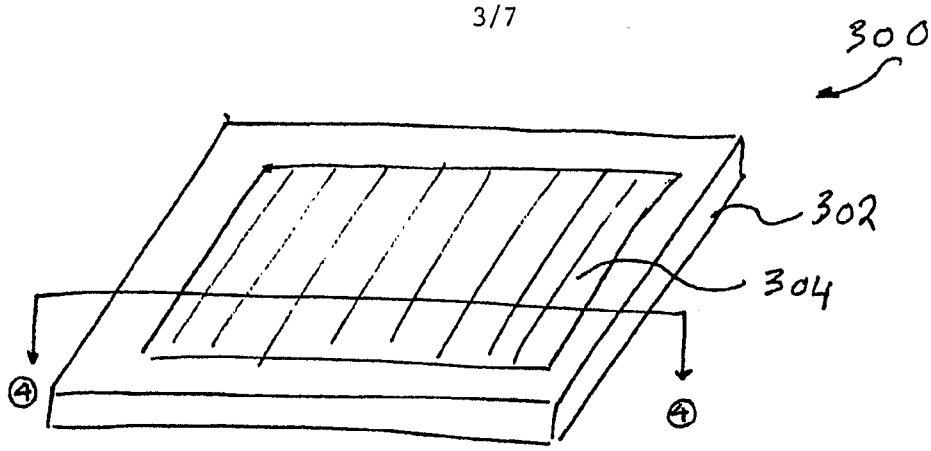

FIGURE 3

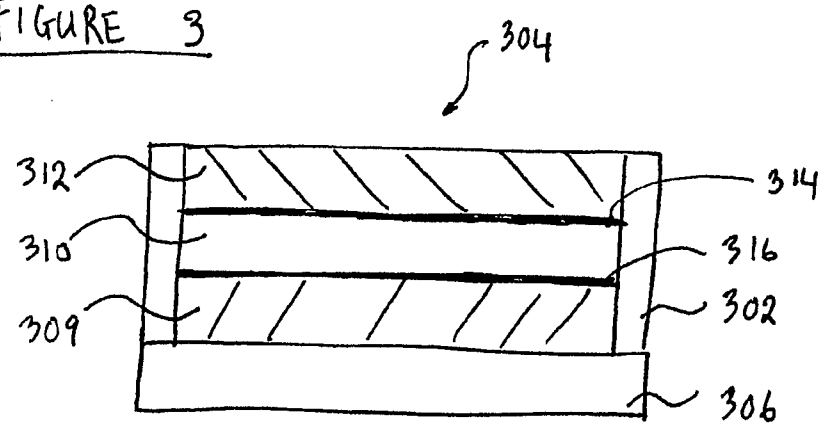

FIGURE 4

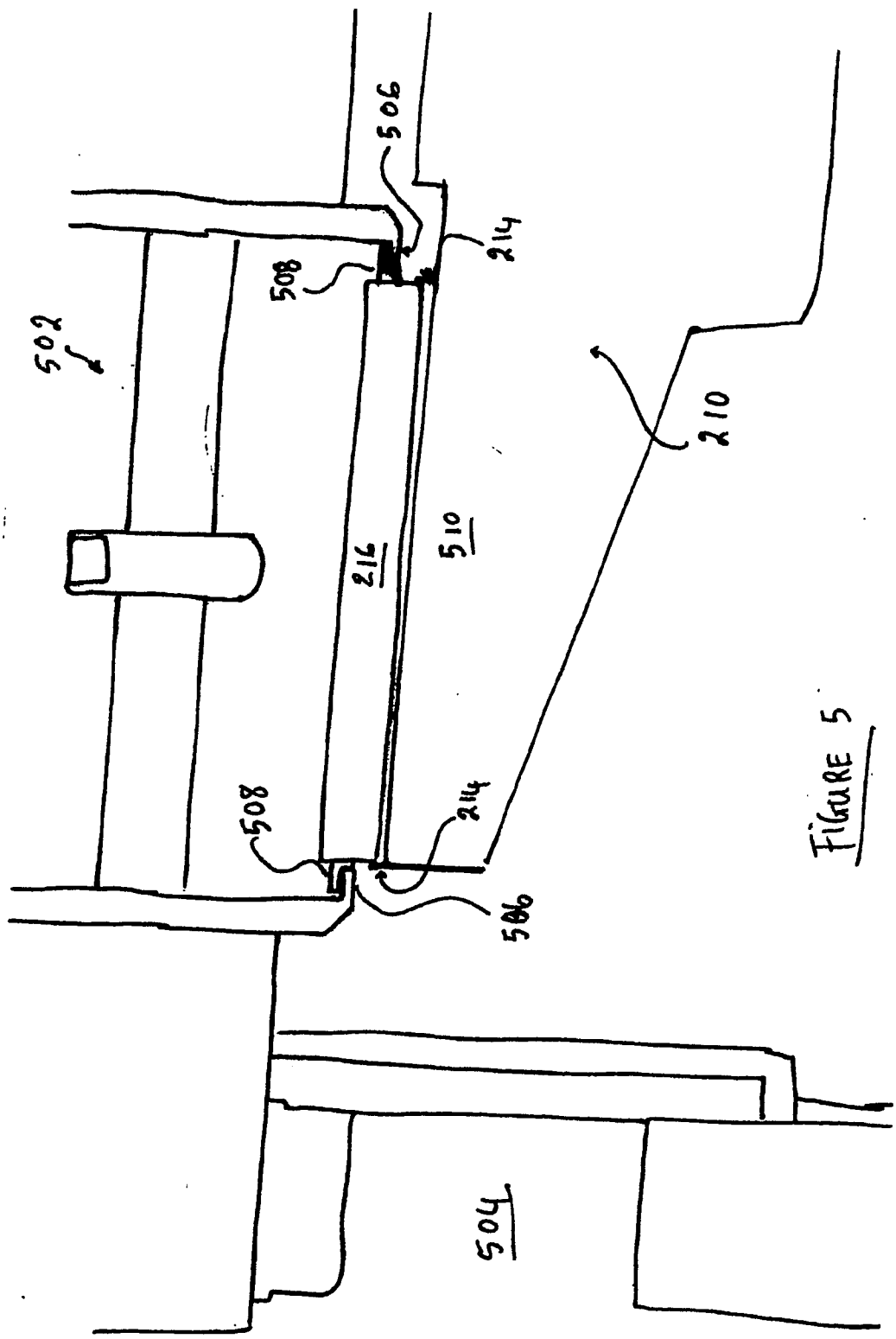

FIGURE 5

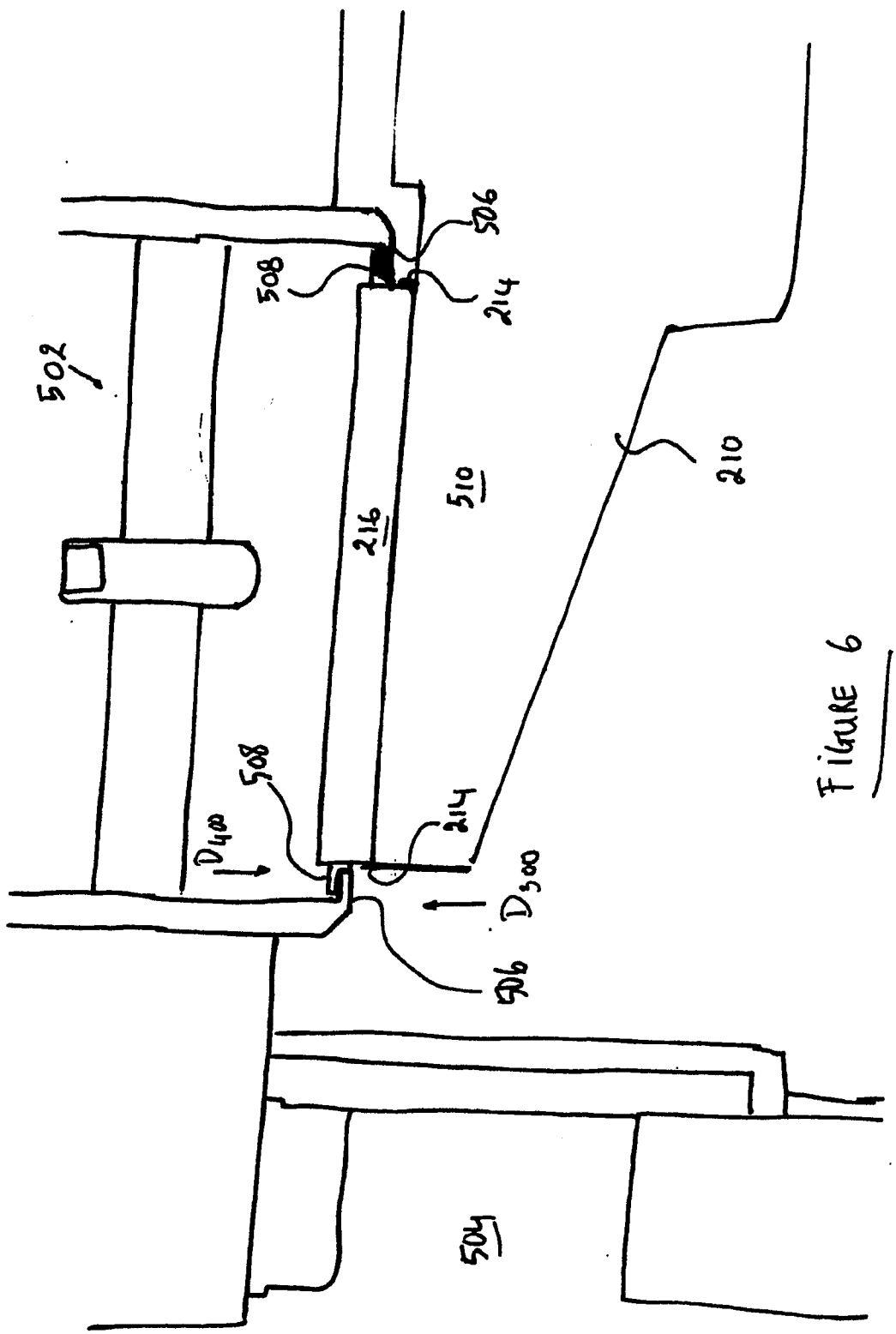

FIGURE 6

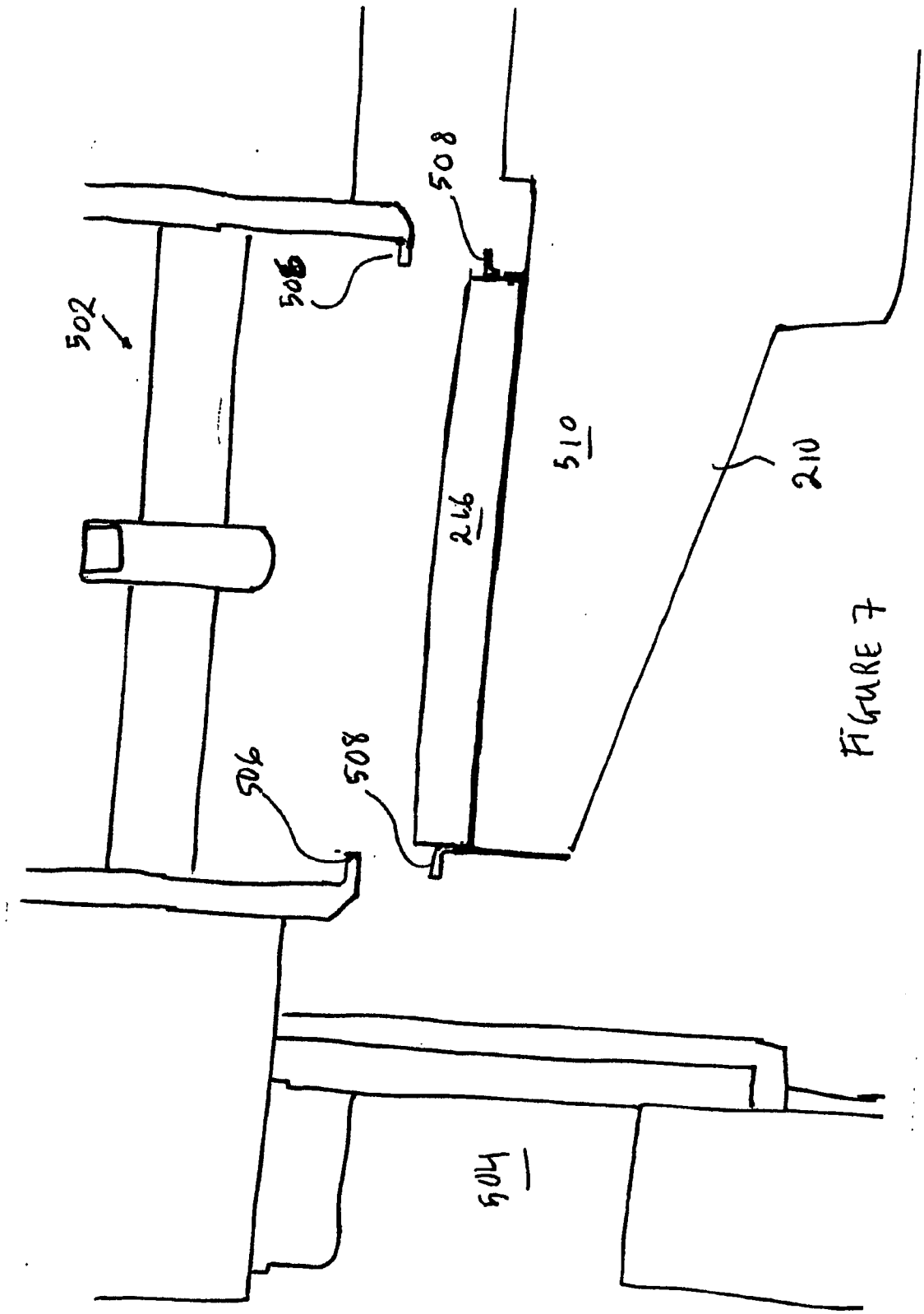

FIGURE 7

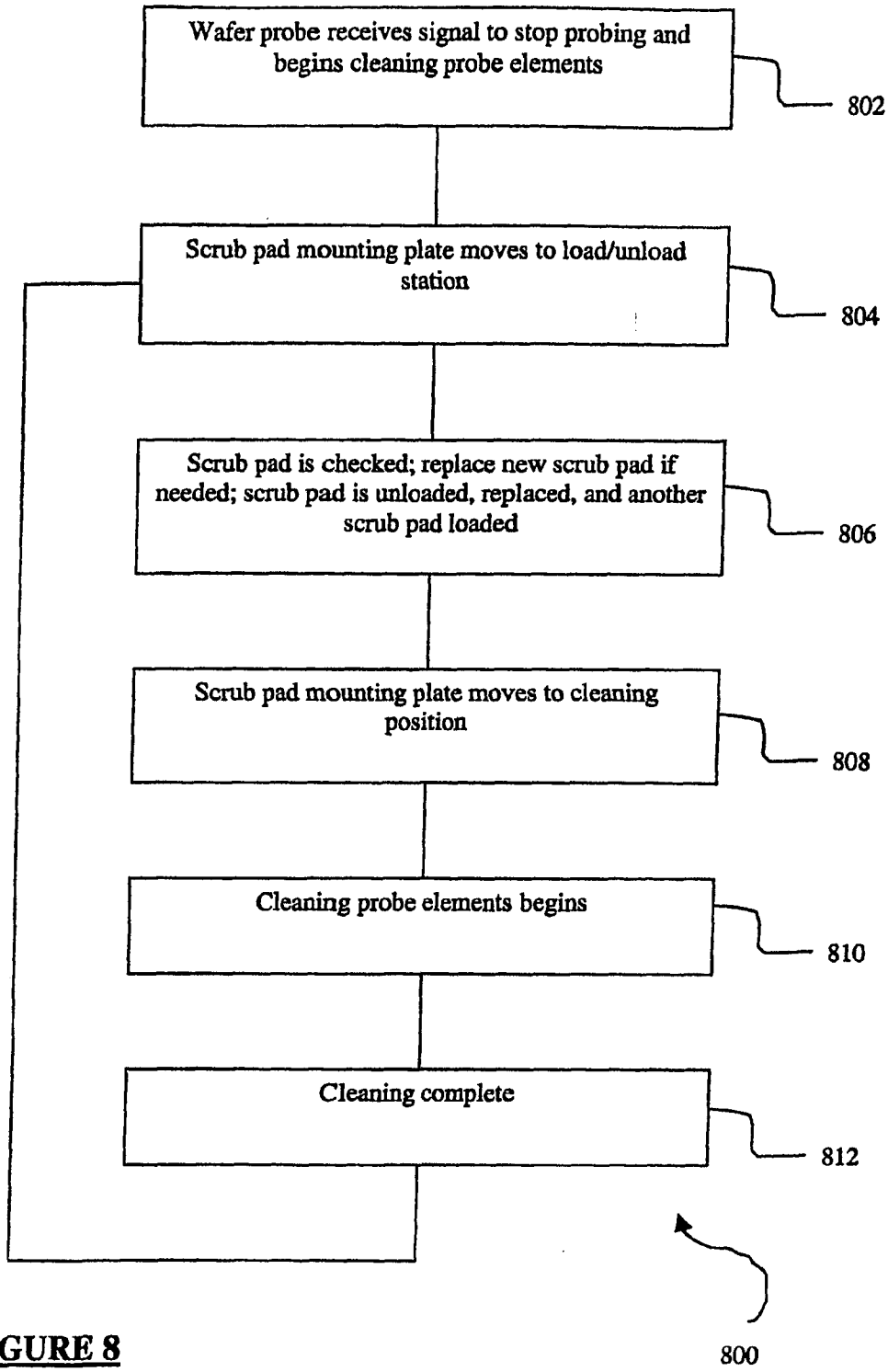
Wafer probe receives signal to stop probing and begins cleaning probe elements
802
Scrub pad mounting plate moves to load/unload station
804
Scrub pad is checked; replace new scrub pad if needed; scrub pad is unloaded, replaced, and another scrub pad loaded
806
Scrub pad mounting plate moves to cleaning position
808
Cleaning probe elements begins
810
Cleaning complete
812
800

FIGURE 8