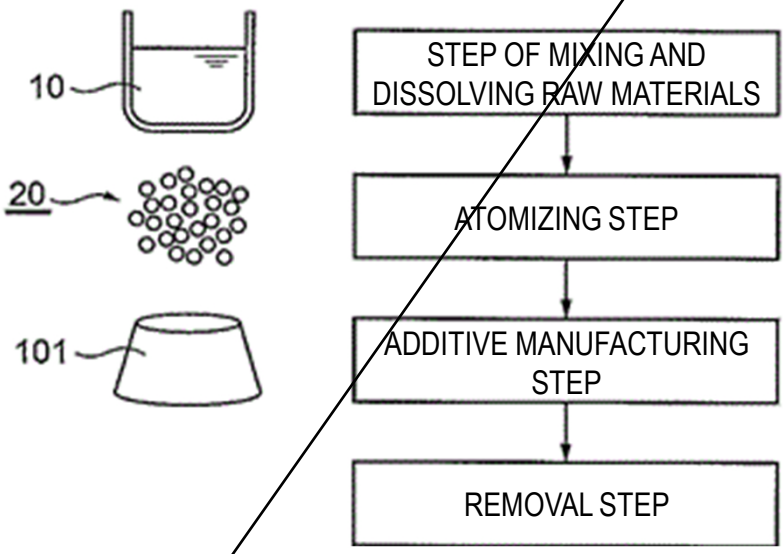
10
20
101
STEP OF MIXING AND DISSOLVING RAW MATERIALS
ATOMIZING STEP
ADDITIVE MANUFACTURING STEP
REMOVAL STEP

FIG. 1

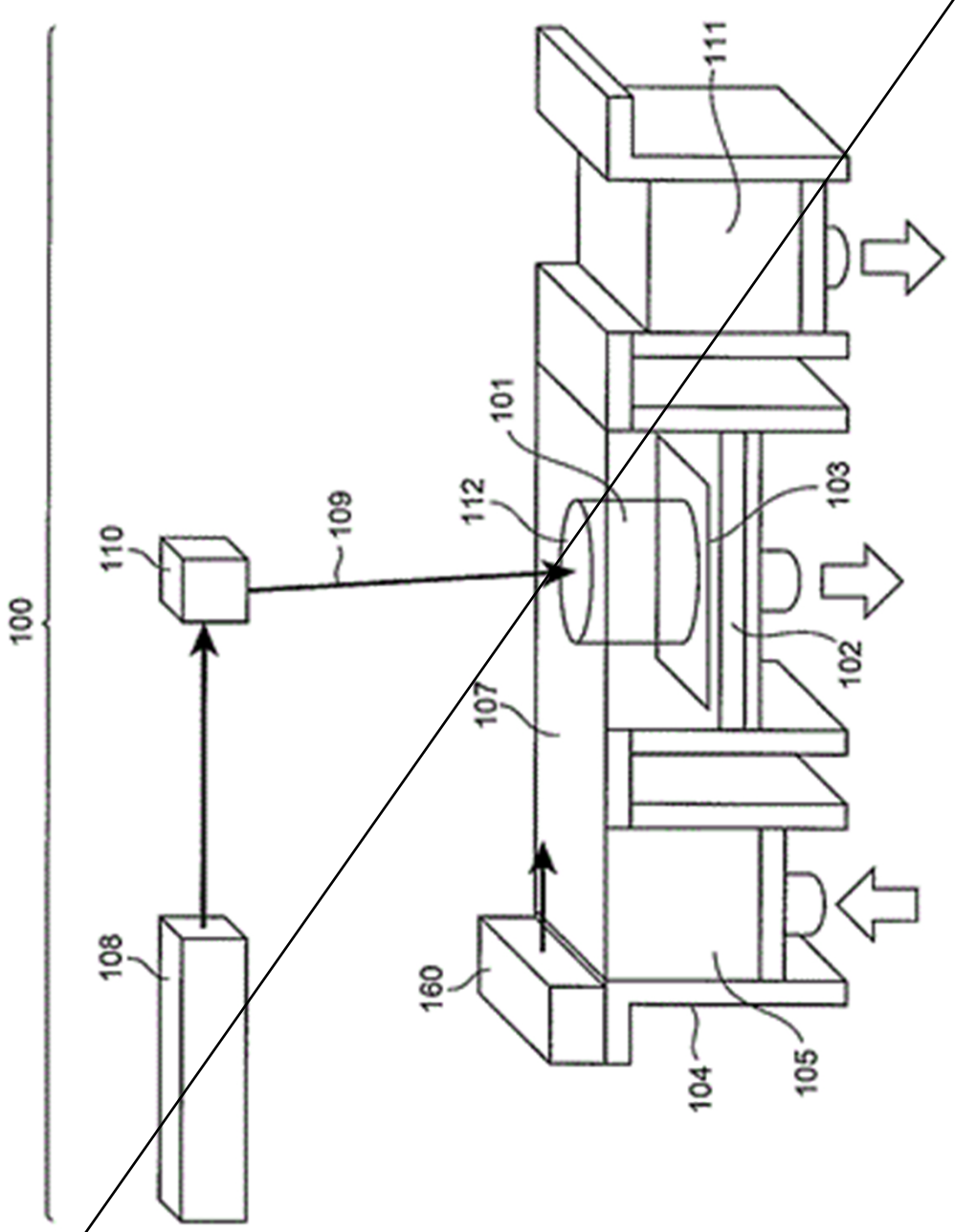

FIG. 2

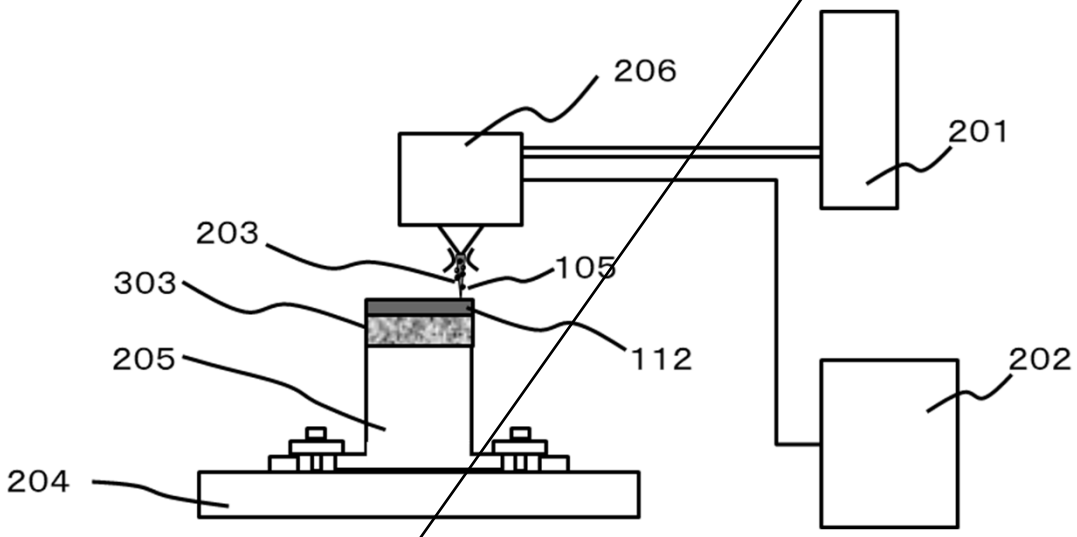

FIG. 3

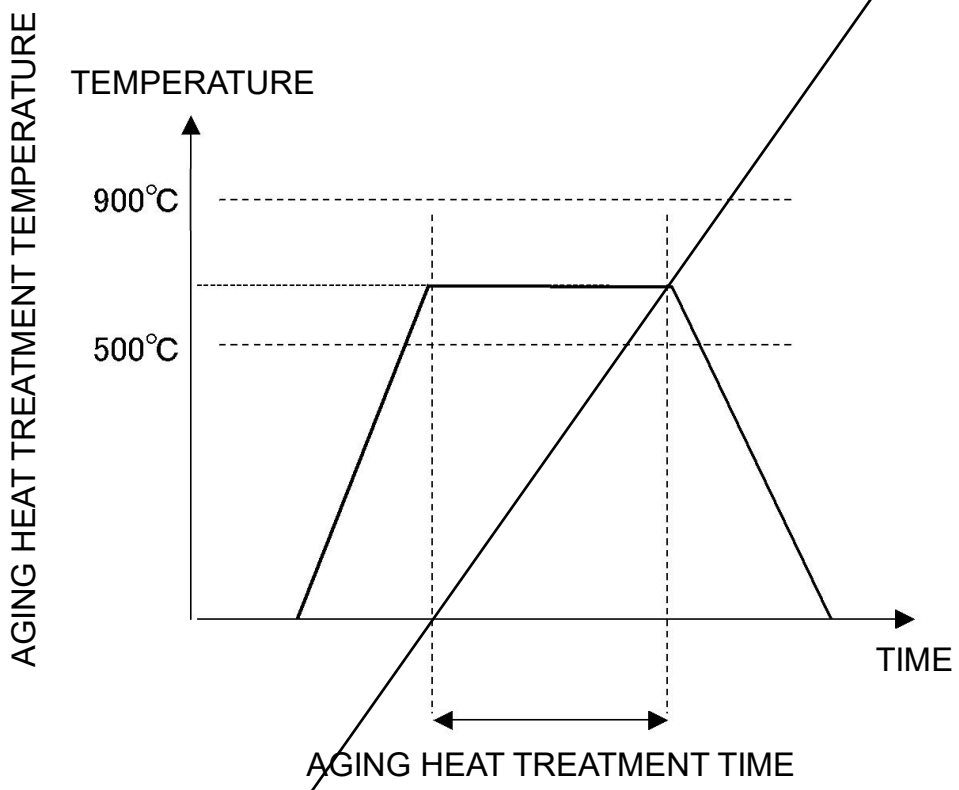
AGING HEAT TREATMENT TEMPERATURE
TEMPERATURE
900℃
500℃
TIME
AGING HEAT TREATMENT TIME

FIG. 4

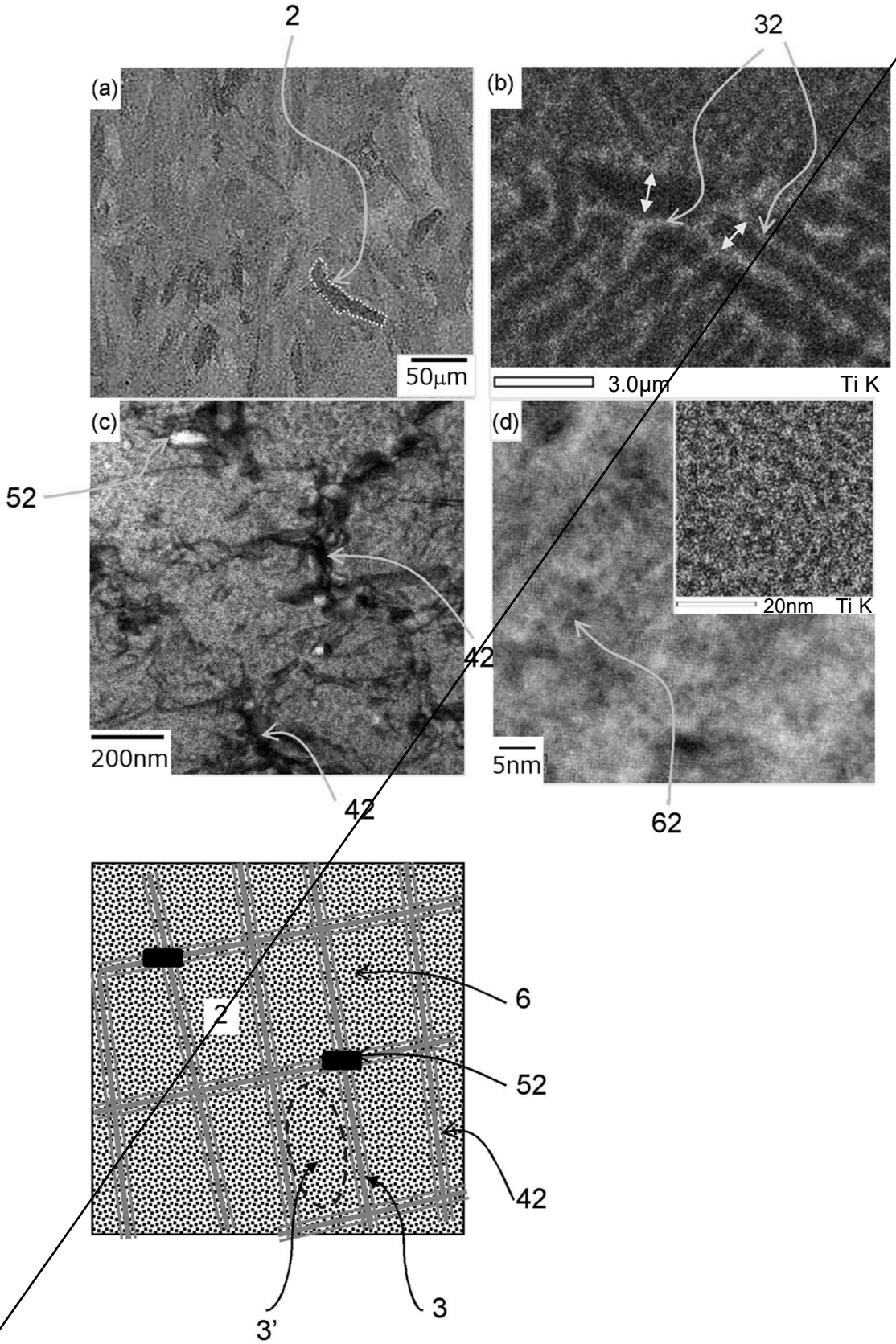

FIG. 5

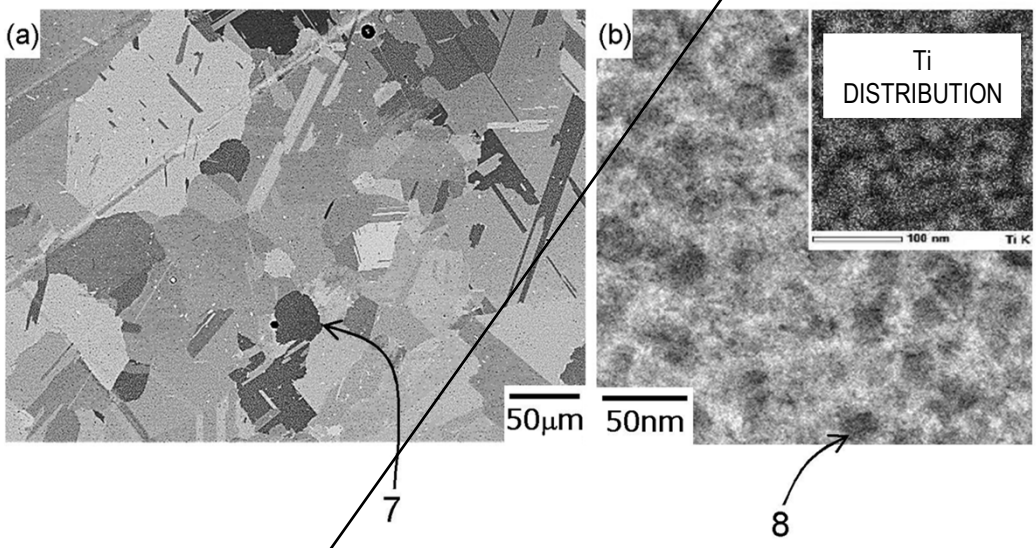

FIG. 6

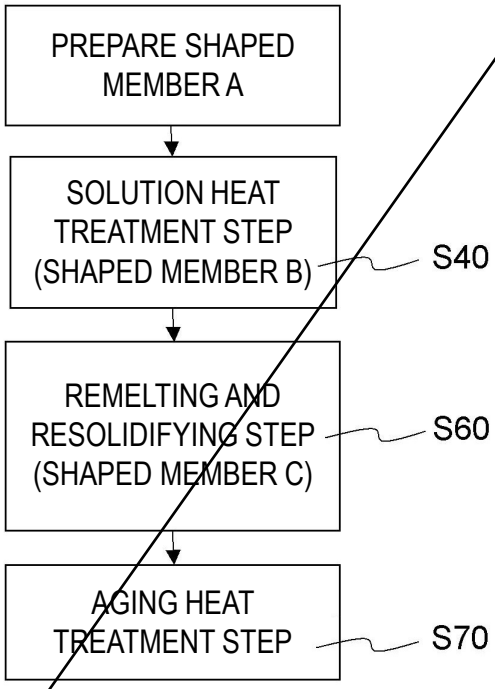
PREPARE SHAPED MEMBER A
SOLUTION HEAT TREATMENT STEP (SHAPED MEMBER B)
S40
REMELTING AND RESOLIDIFYING STEP (SHAPED MEMBER C)
S60
AGING HEAT TREATMENT STEP
S70

FIG. 7

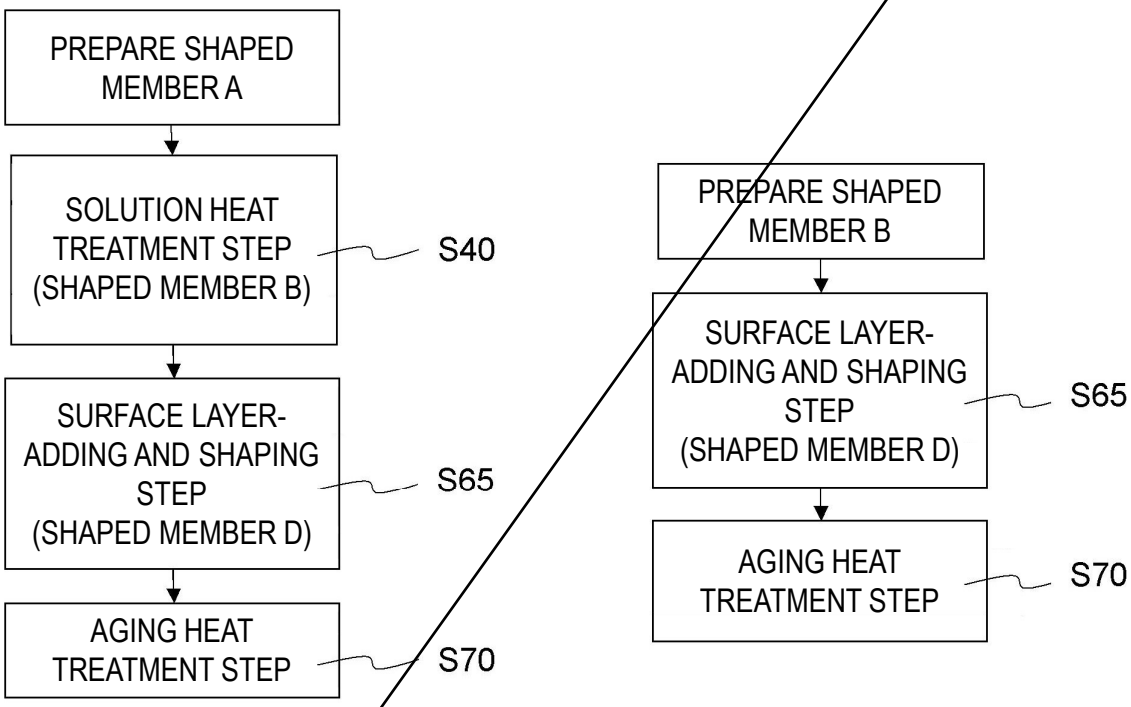
PREPARE SHAPED MEMBER A
SOLUTION HEAT TREATMENT STEP (SHAPED MEMBER B)
S40
SURFACE LAYER-ADDING AND SHAPING STEP (SHAPED MEMBER D)
S65
AGING HEAT TREATMENT STEP
S70
PREPARE SHAPED MEMBER B
SURFACE LAYER-ADDING AND SHAPING STEP (SHAPED MEMBER D)
S65
AGING HEAT TREATMENT STEP
S70

FIG. 8

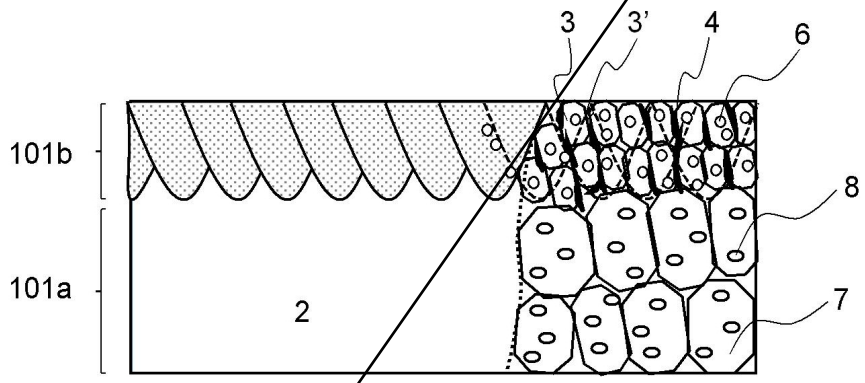

FIG. 9

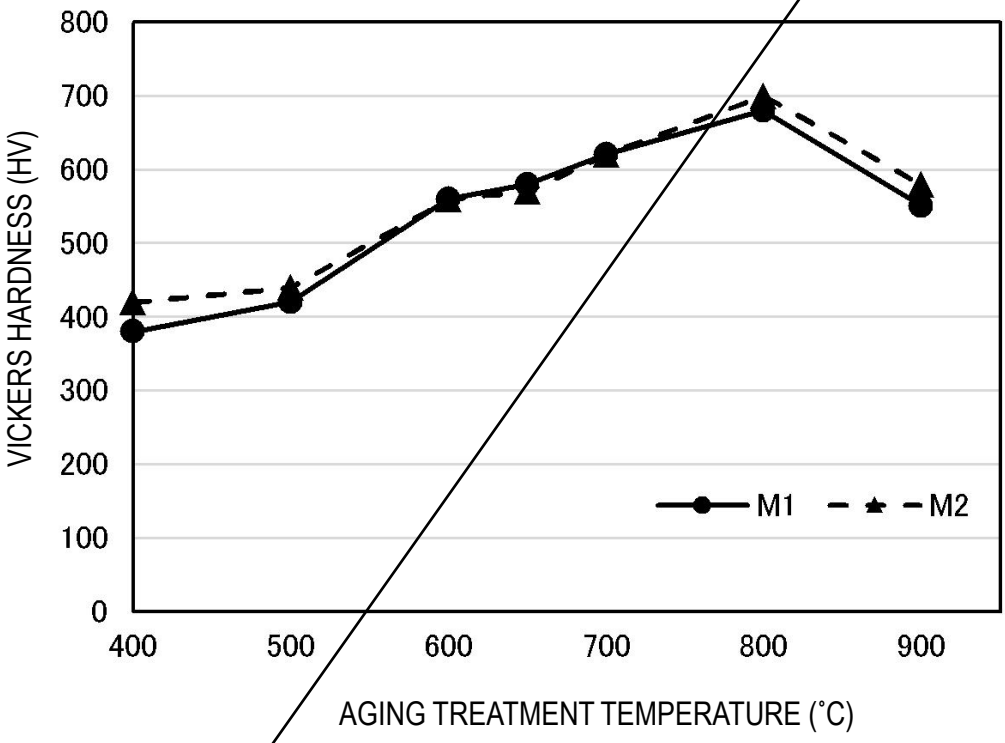
800
700
600
500
400
300
200
100
0
VICKERS HARDNESS (HV)
400
500
600
700
800
900
AGING TREATMENT TEMPERATURE (˚C)
M1
M2

FIG. 10

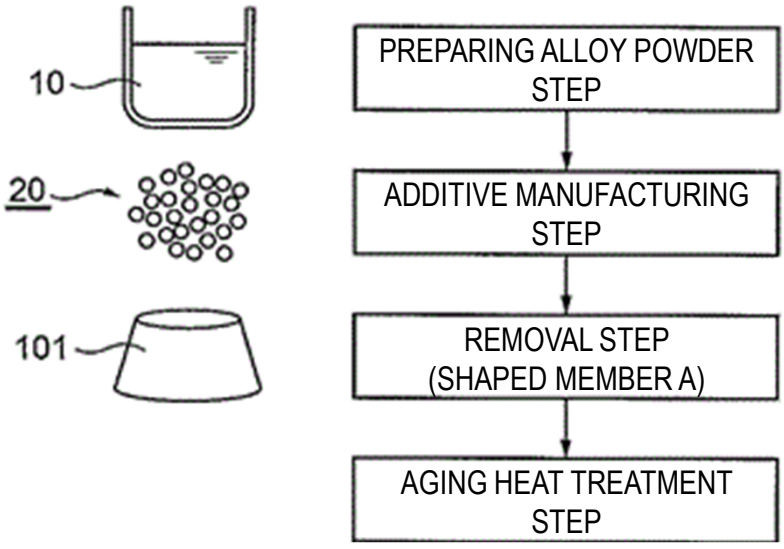
10
20
101
PREPARING ALLOY POWDER STEP
ADDITIVE MANUFACTURING STEP
REMOVAL STEP (SHAPED MEMBER A)
AGING HEAT TREATMENT STEP

FIG. 1

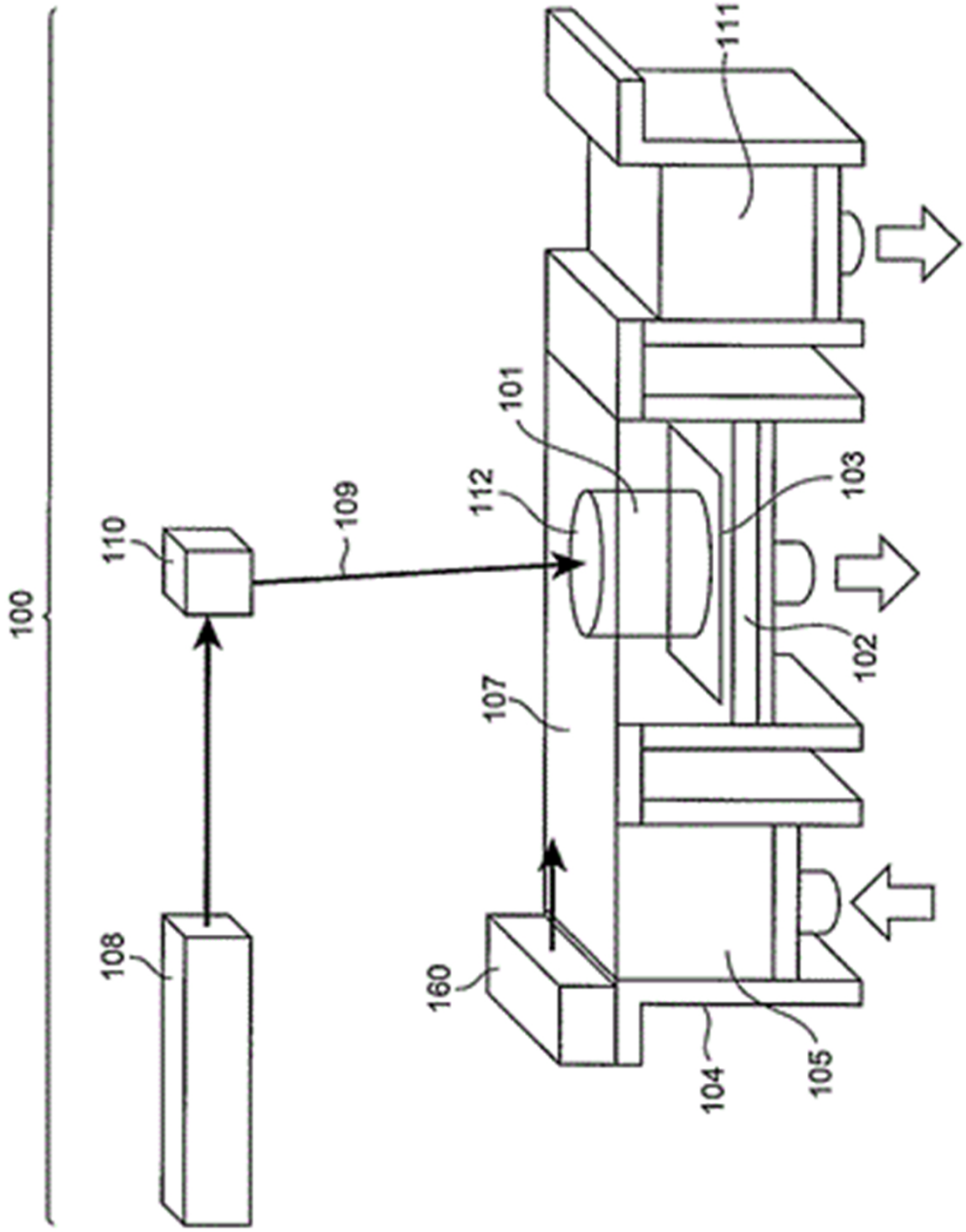

FIG. 2

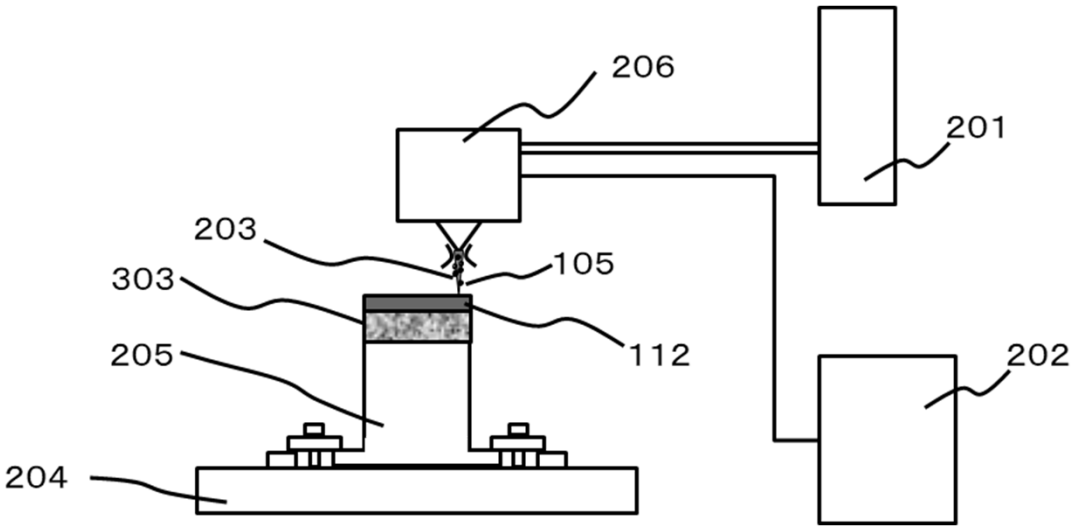

FIG. 3

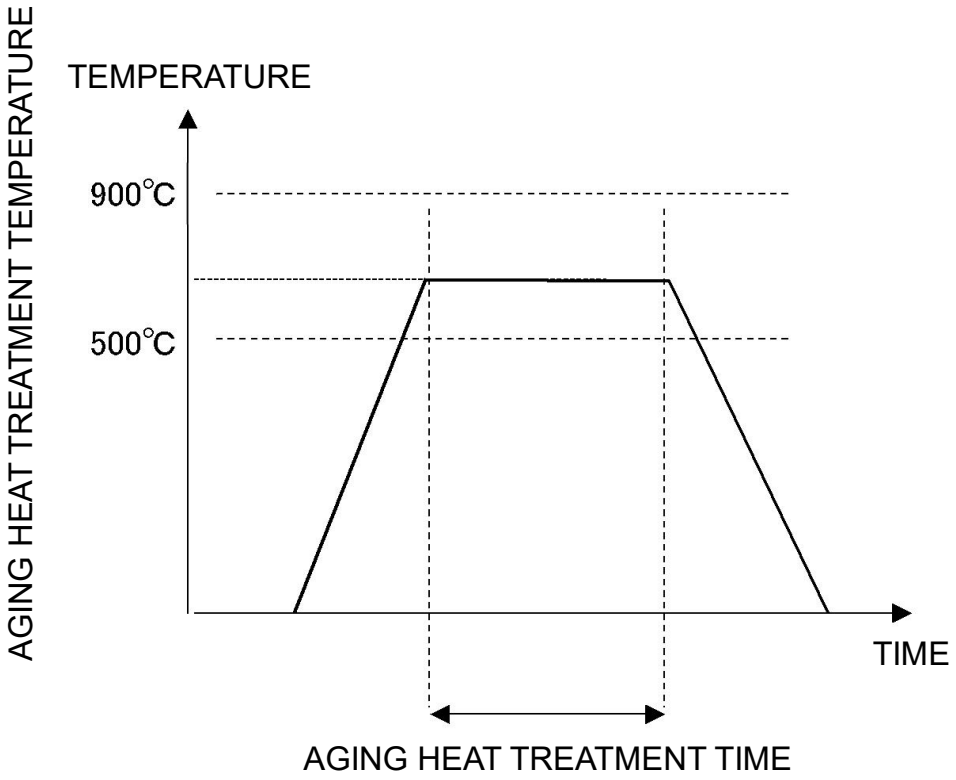
AGING HEAT TREATMENT TEMPERATURE
TEMPERATURE
900℃
500℃
TIME
AGING HEAT TREATMENT TIME

FIG. 4

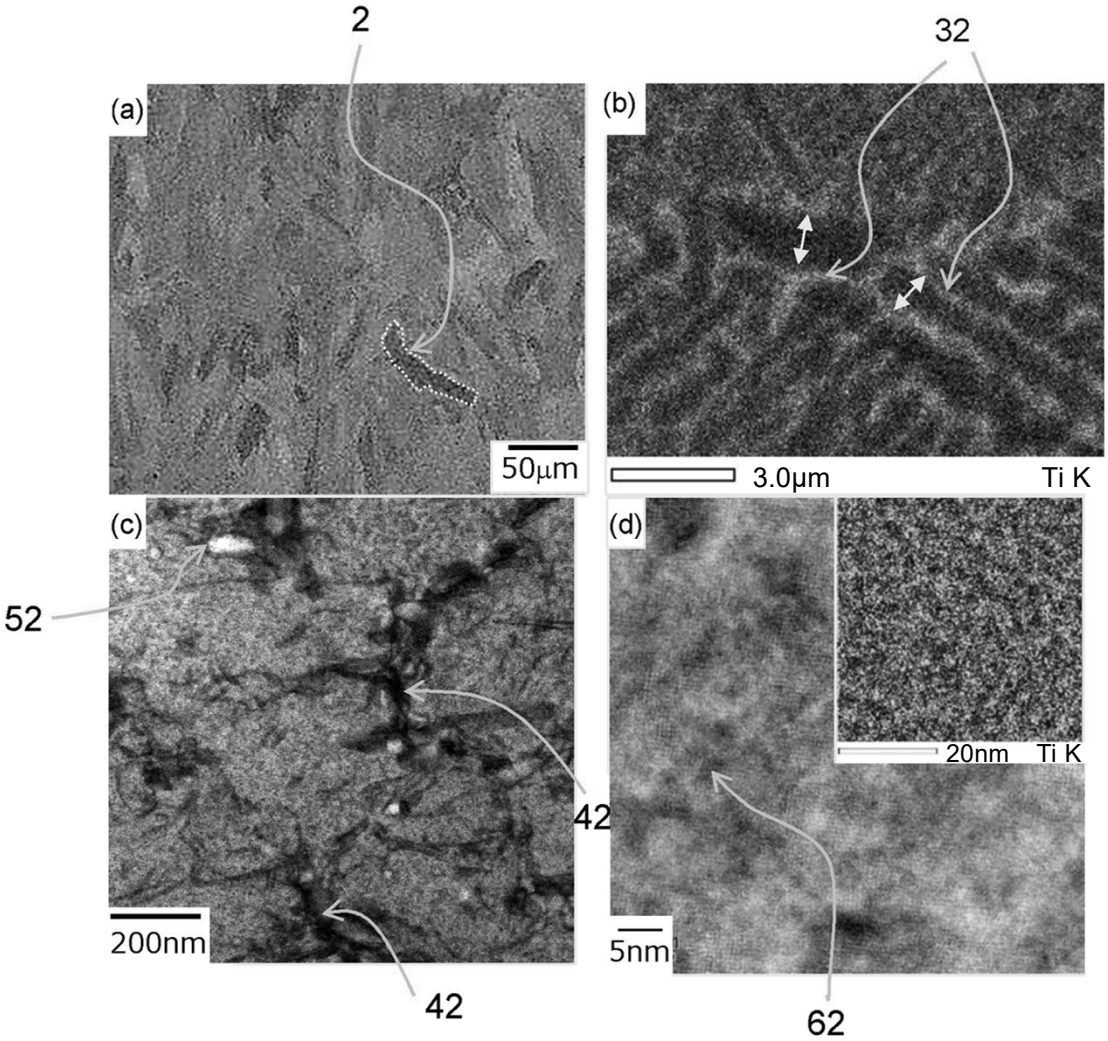

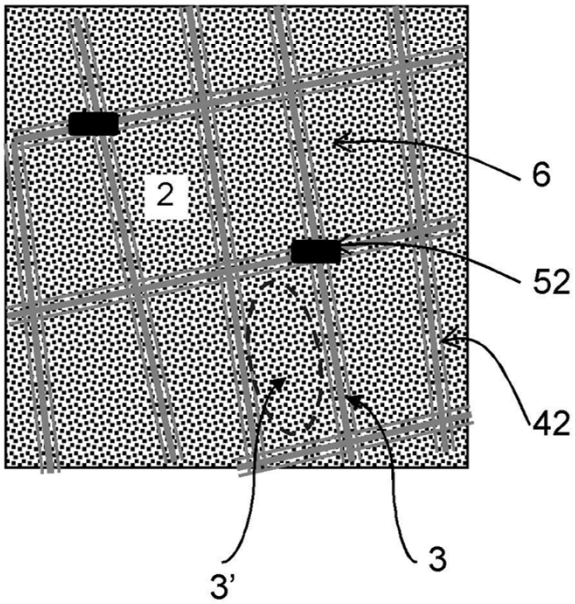

FIG. 5

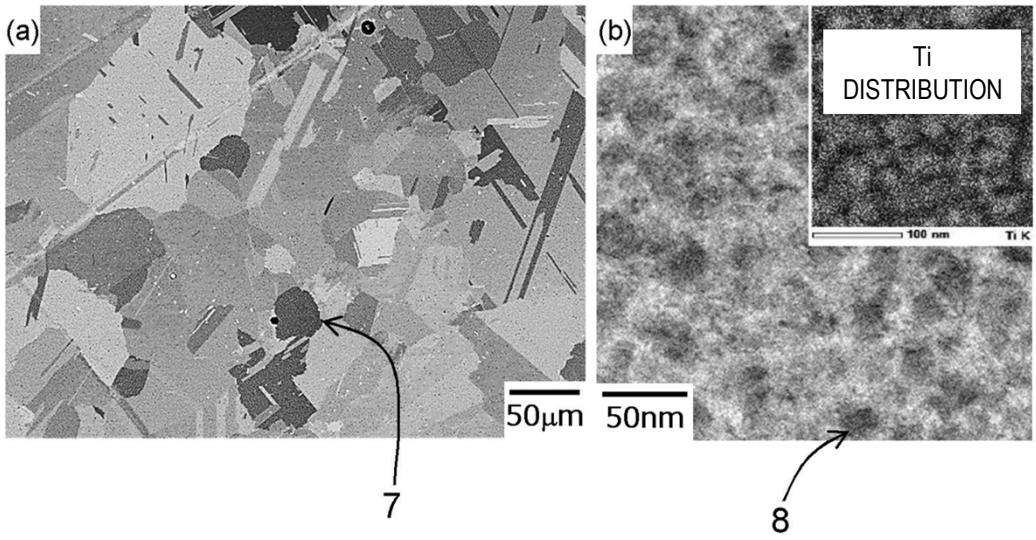

FIG. 6

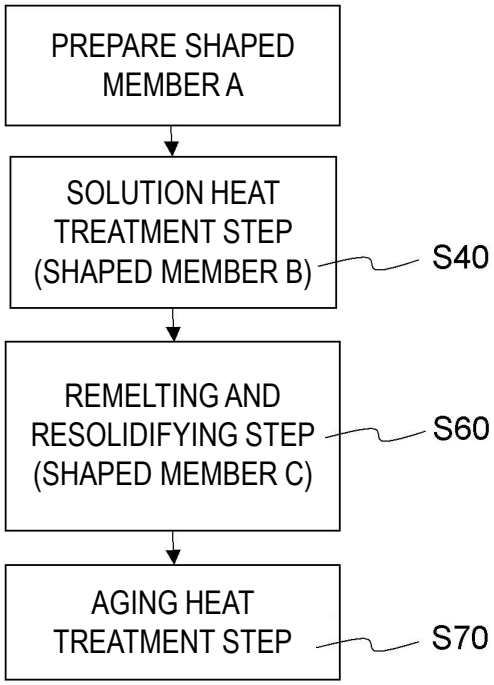
PREPARE SHAPED MEMBER A
SOLUTION HEAT TREATMENT STEP (SHAPED MEMBER B)
S40
REMELTING AND RESOLIDIFYING STEP (SHAPED MEMBER C)
S60
AGING HEAT TREATMENT STEP
S70

FIG. 7

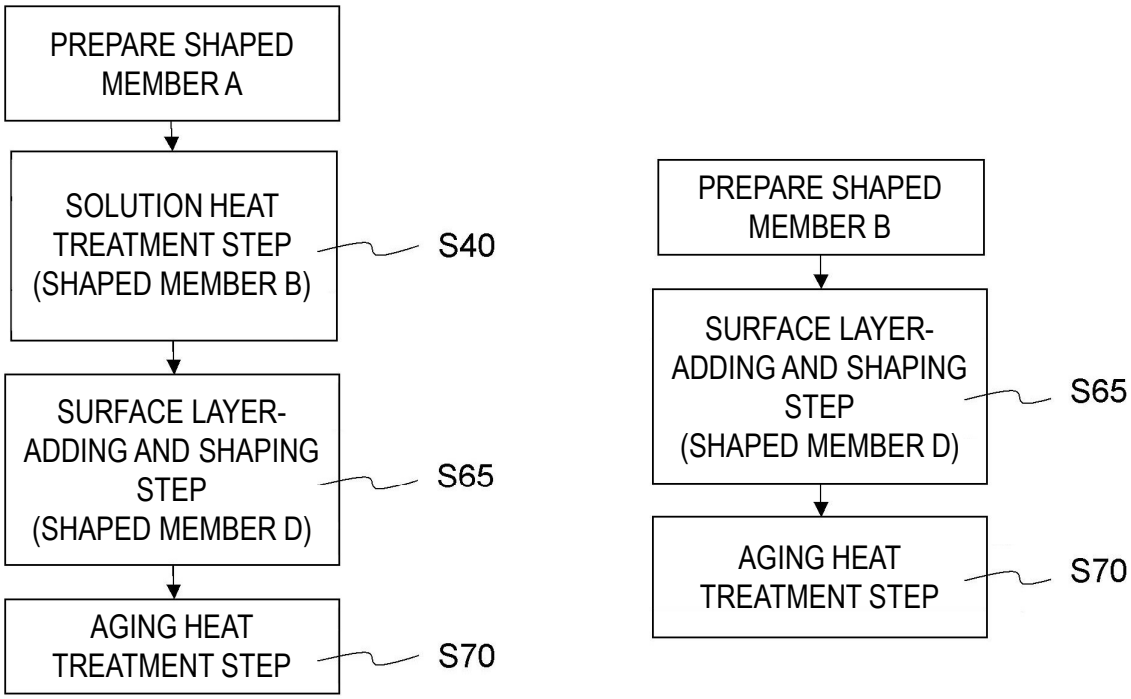
PREPARE SHAPED MEMBER A
SOLUTION HEAT TREATMENT STEP (SHAPED MEMBER B)
S40
SURFACE LAYER-ADDING AND SHAPING STEP (SHAPED MEMBER D)
S65
AGING HEAT TREATMENT STEP
S70
PREPARE SHAPED MEMBER B
SURFACE LAYER-ADDING AND SHAPING STEP (SHAPED MEMBER D)
S65
AGING HEAT TREATMENT STEP
S70

FIG. 8

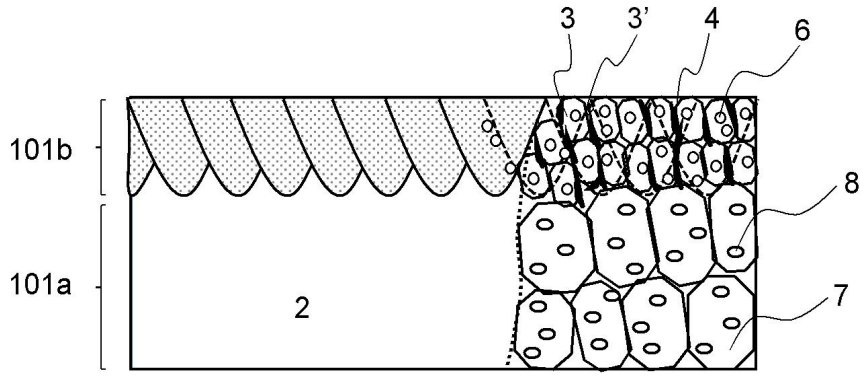

FIG. 9

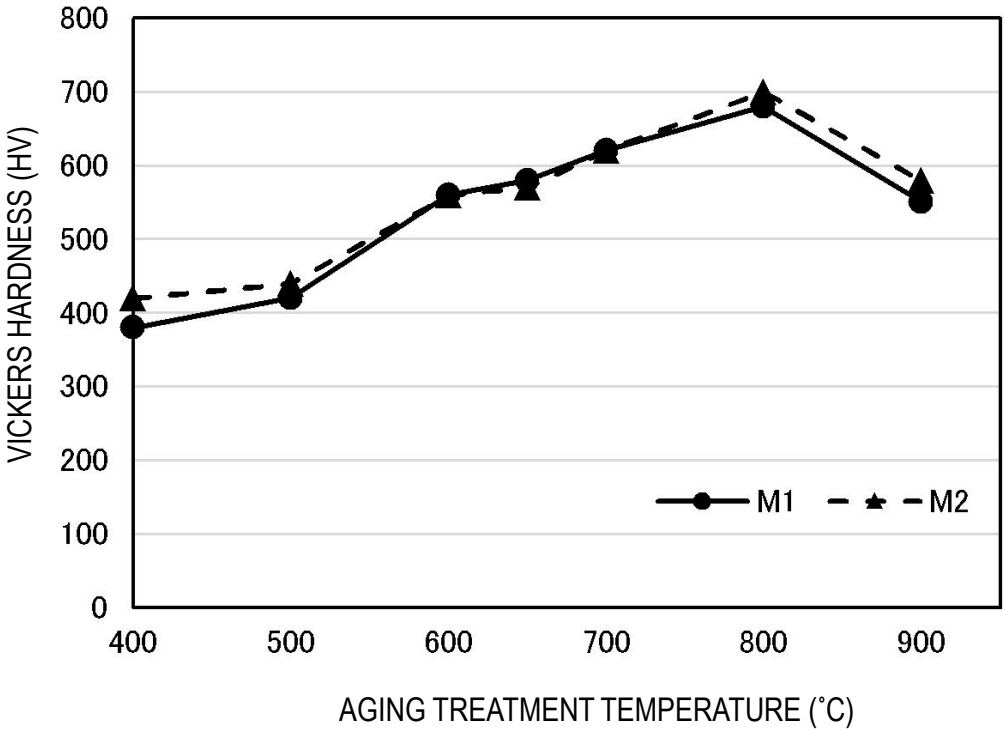
800
700
600
500
400
300
200
100
0
VICKERS HARDNESS (HV)
400
500
600
700
800
900
AGING TREATMENT TEMPERATURE (˚C)
M1
M2

FIG. 10