(12) INTERNATIONAL APPLICATION PUBLISHED UNDER THE PATENT COOPERATION TREATY (PCT)

(19) World Intellectual Property Organization
International Bureau

(43) International Publication Date
10 June 2010 (10.06.2010)

PCT

(10) International Publication Number
WO 2010/063684 A1

(51) International Patent Classification:
G11B 20/18 (2006.01) *G11B 5/596* (2006.01)
G11B 20/12 (2006.01) *G11B 19/04* (2006.01)

(21) International Application Number:
PCT/EP2009/066084

(22) International Filing Date:
30 November 2009 (30.11.2009)

(25) Filing Language: English

(26) Publication Language: English

(30) Priority Data:
61/118,805 1 December 2008 (01.12.2008) US

(71) Applicants *(for all designated States except US)*: **XYRATEX TECHNOLOGY LIMITED** [GB/GB]; Langstone Road, Havant Hampshire PO9 1SA (GB). **SEAGATE TECHNOLOGY LLC** [US/US]; 920 Disc Drive, Scotts Valley, California 95066 (US).

(72) Inventors; and

(75) Inventors/Applicants *(for US only)*: **BRADY, Keith** [GB/GB]; 150 Gordon Road, Fareham Hampshire PO16 7TA (GB). **QUICK, Gregory** [GB/GB]; 27 Rogers Mead, Hayling Island Hampshire PO11 0PN (GB).

(74) Agent: **BEBBINGTON, Nicholas**; Fulwood House, 12 Fulwood Place, London London WC1V 6HR (GB).

(81) Designated States *(unless otherwise indicated, for every kind of national protection available)*: AE, AG, AL, AM, AO, AT, AU, AZ, BA, BB, BG, BH, BR, BW, BY, BZ, CA, CH, CL, CN, CO, CR, CU, CZ, DE, DK, DM, DO, DZ, EC, EE, EG, ES, FI, GB, GD, GE, GH, GM, GT, HN, HR, HU, ID, IL, IN, IS, JP, KE, KG, KM, KN, KP, KR, KZ, LA, LC, LK, LR, LS, LT, LU, LY, MA, MD, ME, MG, MK, MN, MW, MX, MY, MZ, NA, NG, NI, NO, NZ, OM, PE, PG, PH, PL, PT, RO, RS, RU, SC, SD, SE, SG, SK, SL, SM, ST, SV, SY, TJ, TM, TN, TR, TT, TZ, UA, UG, US, UZ, VC, VN, ZA, ZM, ZW.

(84) Designated States *(unless otherwise indicated, for every kind of regional protection available)*: ARIPO (BW, GH, GM, KE, LS, MW, MZ, NA, SD, SL, SZ, TZ, UG, ZM, ZW), Eurasian (AM, AZ, BY, KG, KZ, MD, RU, TJ, TM), European (AT, BE, BG, CH, CY, CZ, DE, DK, EE, ES, FI, FR, GB, GR, HR, HU, IE, IS, IT, LT, LU, LV,

[Continued on next page]

(54) Title: MEASURING A SIGNAL WITH A SPIN STAND

(57) Abstract: There is disclosed a method and apparatus for measuring a signal (15) using a measurement system (20). The signal (15) has a frequency component that is to be detected by the measurement. The frequency component has a varying phase. The signal (15) has at least one interruption thereto. The method comprises: processing the signal (15) with the measurement system (20) to detect said frequency component in the signal (15) and stalling the measurement system (20) before the start of the interruption. The stall period is calculated such that the processing of the signal (15) is resumed: i) after the end of the interruption, and ii) where there is substantially no discontinuity between the phase of the frequency component in the signal (15) at the end of the stall and in the phase of the frequency component in the signal at the beginning of the stall.

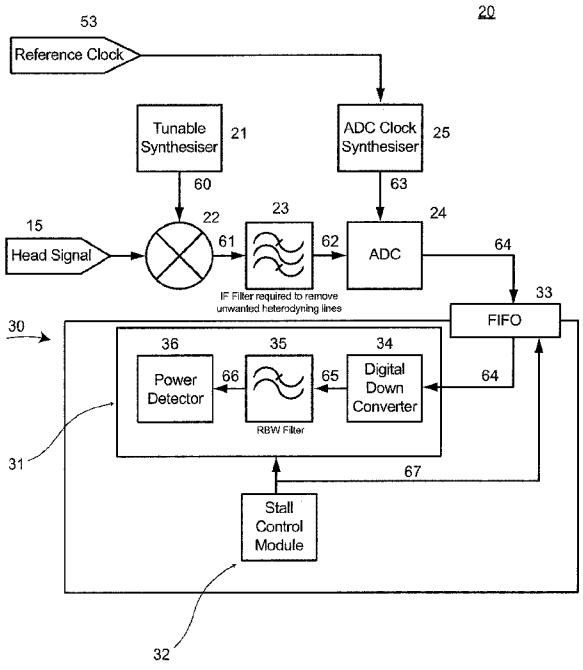

Fig. 3

WO 2010/063684 A1

MC, MK, MT, NL, NO, PL, PT, RO, SE, SI, SK, SM, TR), OAPI (BF, BJ, CF, CG, CI, CM, GA, GN, GQ, GW, ML, MR, NE, SN, TD, TG).

Published:

— *with international search report (Art. 21(3))*

— *with amended claims (Art. 19(1))*