(12) INTERNATIONAL APPLICATION PUBLISHED UNDER THE PATENT COOPERATION TREATY (PCT)

CORRECTED VERSION

(19) World Intellectual Property Organization
International Bureau

(43) International Publication Date
4 June 2009 (04.06.2009)

PCT

(10) International Publication Number
WO 2009/068969 A8

(51) International Patent Classification:
E04G 15/04 (2006.01)

(21) International Application Number:
PCT/IB2008/003238

(22) International Filing Date:
26 November 2008 (26.11.2008)

(25) Filing Language: English

(26) Publication Language: English

(30) Priority Data:
2007906496 28 November 2007 (28.11.2007) AU

(71) Applicant *(for all designated States except US)*: **ITW CONSTRUCTION SYSTEMS AUSTRALIA PTY LTD.** [AU/AU]; Suite 15, Doncaster Road, Balwyn North, Victoria, 3104 (AU).

(72) Inventor; and

(75) Inventor/Applicant *(for US only)*: **CONNELL, Robert Urquhart** [AU/AU]; 90b Eskdale Road, North Caulfield, Victoria, 3161 (AU).

(81) Designated States *(unless otherwise indicated, for every kind of national protection available)*: AE, AG, AL, AM, AO, AT, AU, AZ, BA, BB, BG, BH, BR, BW, BY, BZ, CA, CH, CN, CO, CR, CU, CZ, DE, DK, DM, DO, DZ, EC, EE, EG, ES, FI, GB, GD, GE, GH, GM, GT, HN, HR, HU, ID, IL, IN, IS, JP, KE, KG, KM, KN, KP, KR, KZ, LA, LC, LK, LR, LS, LT, LU, LY, MA, MD, ME, MG, MK, MN, MW, MX, MY, MZ, NA, NG, NI, NO, NZ, OM, PG, PH, PL, PT, RO, RS, RU, SC, SD, SE, SG, SK, SL, SM, ST, SV, SY, TJ, TM, TN, TR, TT, TZ, UA, UG, US, UZ, VC, VN, ZA, ZM, ZW.

(84) Designated States *(unless otherwise indicated, for every kind of regional protection available)*: ARIPO (BW, GH, GM, KE, LS, MW, MZ, NA, SD, SL, SZ, TZ, UG, ZM, ZW), Eurasian (AM, AZ, BY, KG, KZ, MD, RU, TJ,

[Continued on next page]

(54) Title: VOID FORMER

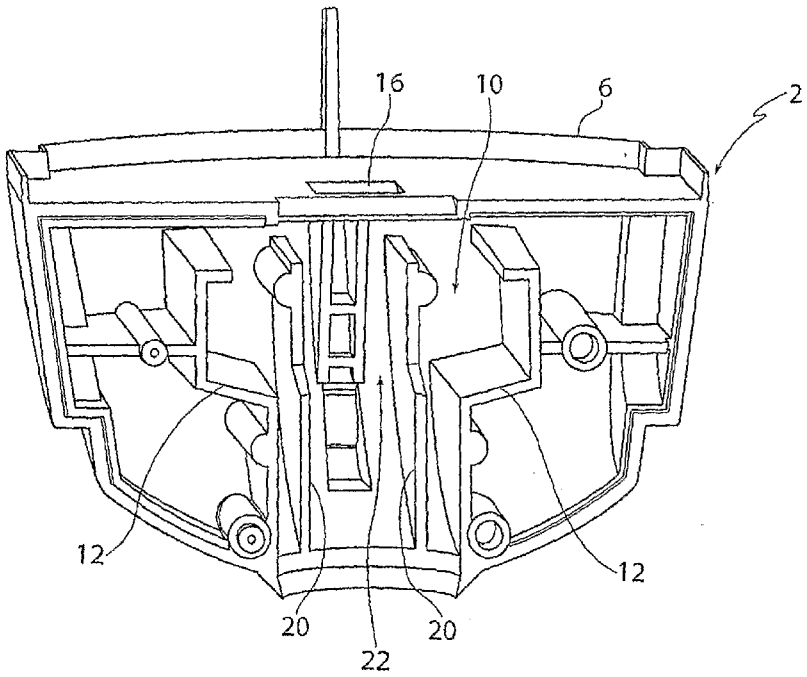

FIG. 11

[Continued on next page]

WO 2009/068969 A8

TM), European (AT, BE, BG, CH, CY, CZ, DE, DK, EE, ES, FI, FR, GB, GR, HR, HU, IE, IS, IT, LT, LU, LV, MC, MT, NL, NO, PL, PT, RO, SE, SI, SK, TR), OAPI (BF, BJ, CF, CG, CI, CM, GA, GN, GQ, GW, ML, MR, NE, SN, TD, TG).

Declarations under Rule 4.17:

— *as to applicant's entitlement to apply for and be granted a patent (Rule 4.17(ii))*

— *as to the applicant's entitlement to claim the priority of the earlier application (Rule 4.17(iii))*

— *of inventorship (Rule 4.17(iv))*

Published:

— *with international search report (Art. 21(3))*

(88) Date of publication of the international search report:
23 July 2009

(48) Date of publication of this corrected version:
17 September 2009

(15) Information about Correction:
see Notice of 17 September 2009

(57) Abstract: A void former for application to the head of a cast-in lifting anchor for a cast concrete component, the void former comprising two body parts engageable to the head of the anchor to enclose the head, means defining at least one predetermined zone in an upper wall of the void former for insertion of a removal tool into the interior of the void former, and means defining a predetermined zone within the interior for engagement of an end of the tool whereby the tool can be used to prise the void former from the head following casting.