(12) INTERNATIONAL APPLICATION PUBLISHED UNDER THE PATENT COOPERATION TREATY (PCT)

(19) World Intellectual Property Organization
International Bureau

(43) International Publication Date
8 February 2007 (08.02.2007)

PCT

(10) International Publication Number
WO 2007/015043 A1

(51) International Patent Classification:
A47K 10/48 (2006.01)

(21) International Application Number:
PCT/GB2006/002139

(22) International Filing Date: 13 June 2006 (13.06.2006)

(25) Filing Language: English

(26) Publication Language: English

(30) Priority Data:
0515752.4 30 July 2005 (30.07.2005) GB

(71) Applicant *(for all designated States except US)*: **DYSON TECHNOLOGY LIMITED** [GB/GB]; Tetbury Hill, Malmesbury, Wiltshire SN16 0RP (GB).

(72) Inventors; and

(75) Inventors/Applicants *(for US only)*: **CHURCHILL, John** [GB/GB]; 2 Prince Of Wales Row, Tetbury, Gloucestershire GL8 8DJ (GB). **DYSON, James** [GB/GB]; Dodington Park, Dodington, Gloucestershire BS37 6SF (GB). **GAMMACK, Peter** [GB/GB]; 3 Belgrave Terrace, Bath, Bath And South East Somerset BA1 5JR (GB).

(74) Agents: **BONNER, Catherine** et al.; DYSON TECHNOLOGY LIMITED, Intellectual Property Department, Tetbury Hill, Malmesbury Wiltshire SN16 0RP (GB).

(81) Designated States *(unless otherwise indicated, for every kind of national protection available)*: AE, AG, AL, AM, AT, AU, AZ, BA, BB, BG, BR, BW, BY, BZ, CA, CH, CN, CO, CR, CU, CZ, DE, DK, DM, DZ, EC, EE, EG, ES, FI, GB, GD, GE, GH, GM, HR, HU, ID, IL, IN, IS, JP, KE, KG, KM, KN, KP, KR, KZ, LC, LK, LR, LS, LT, LU, LV, LY, MA, MD, MG, MK, MN, MW, MX, MZ, NA, NG, NI, NO, NZ, OM, PG, PH, PL, PT, RO, RS, RU, SC, SD, SE, SG, SK, SL, SM, SY, TJ, TM, TN, TR, TT, TZ, UA, UG, US, UZ, VC, VN, ZA, ZM, ZW.

(84) Designated States *(unless otherwise indicated, for every kind of regional protection available)*: ARIPO (BW, GH, GM, KE, LS, MW, MZ, NA, SD, SL, SZ, TZ, UG, ZM, ZW), Eurasian (AM, AZ, BY, KG, KZ, MD, RU, TJ, TM), European (AT, BE, BG, CH, CY, CZ, DE, DK, EE, ES, FI, FR, GB, GR, HU, IE, IS, IT, LT, LU, LV, MC, NL, PL, PT, RO, SE, SI, SK, TR), OAPI (BF, BJ, CF, CG, CI, CM, GA, GN, GQ, GW, ML, MR, NE, SN, TD, TG).

Published:
— *with international search report*

[Continued on next page]

(54) Title: DRYER

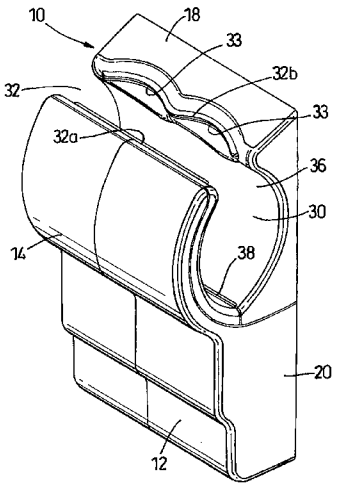

(57) **Abstract:** Hand drying apparatus (10) has a casing (12), a cavity (30) formed in the casing (12) for receiving for receiving a user's hands, a fan (40) located in the casing (12) and capable of creating an airflow, and a plurality of openings (60, 62) communicating with the fan (40) and arranged to direct an airflow transversely across the cavity (30). The cavity (30) has an entrance (32) delimited by a front edge (32a) and a rear edge (32b) in which the openings (60, 62) are located. The shape of the front and rear edges (32a, 32b) is such that, when in use the user's hands are introduced to the cavity (30), the distance between the user's hands and the nearest opening (60, 62) is substantially uniform. Alternatively, one of the edges (32a) is substantially straight and the other of the said edges (32b) is curved so that the distance between the said edges (32a, 32b) varies along the length of the cavity entrance (32). These arrangements enhance the drying efficiency of the dryer.

WO 2007/015043 A1

For two-letter codes and other abbreviations, refer to the "Guidance Notes on Codes and Abbreviations" appearing at the beginning of each regular issue of the PCT Gazette.