FIG. 1

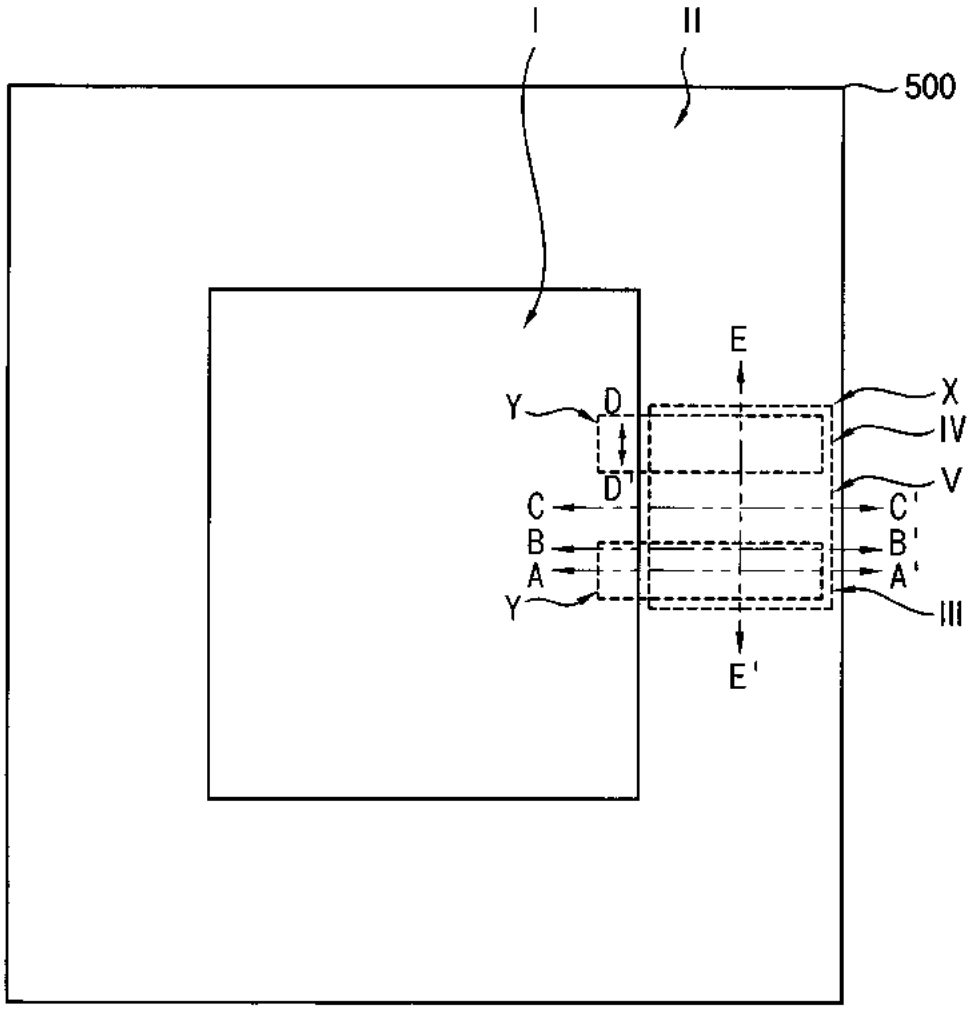
I
II
500
E
X
Y
D
IV
D'
V
C
C'
B
B'
A
A'
Y
III
E'

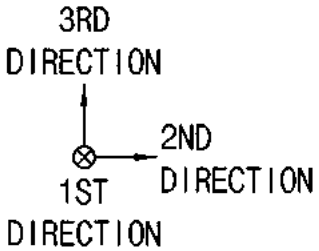
3RD
DIRECTION
2ND
DIRECTION
1ST
DIRECTION

FIG. 2

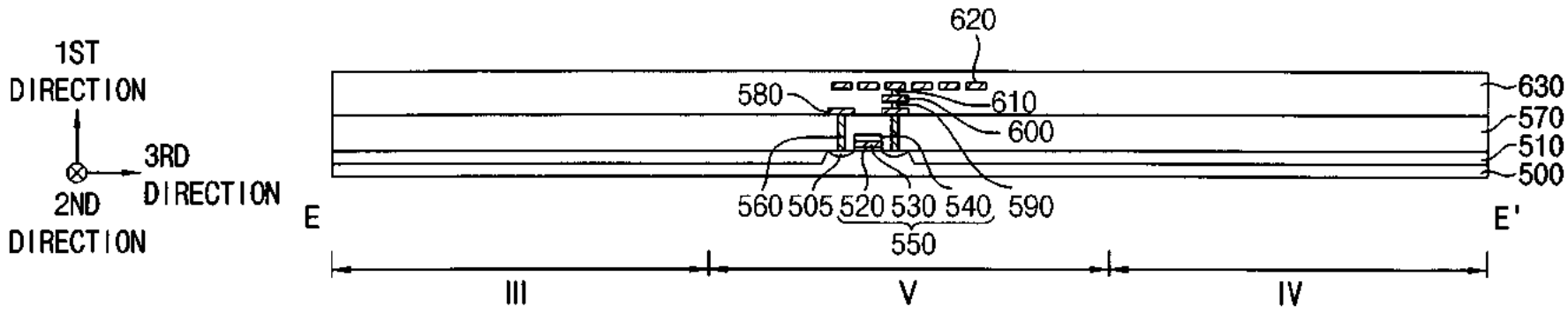
1ST DIRECTION
3RD DIRECTION
2ND DIRECTION
620
580
610
600
630
570
510
500
560
505
520
530
540
590
550
E
E'
III
V
IV

FIG. 3

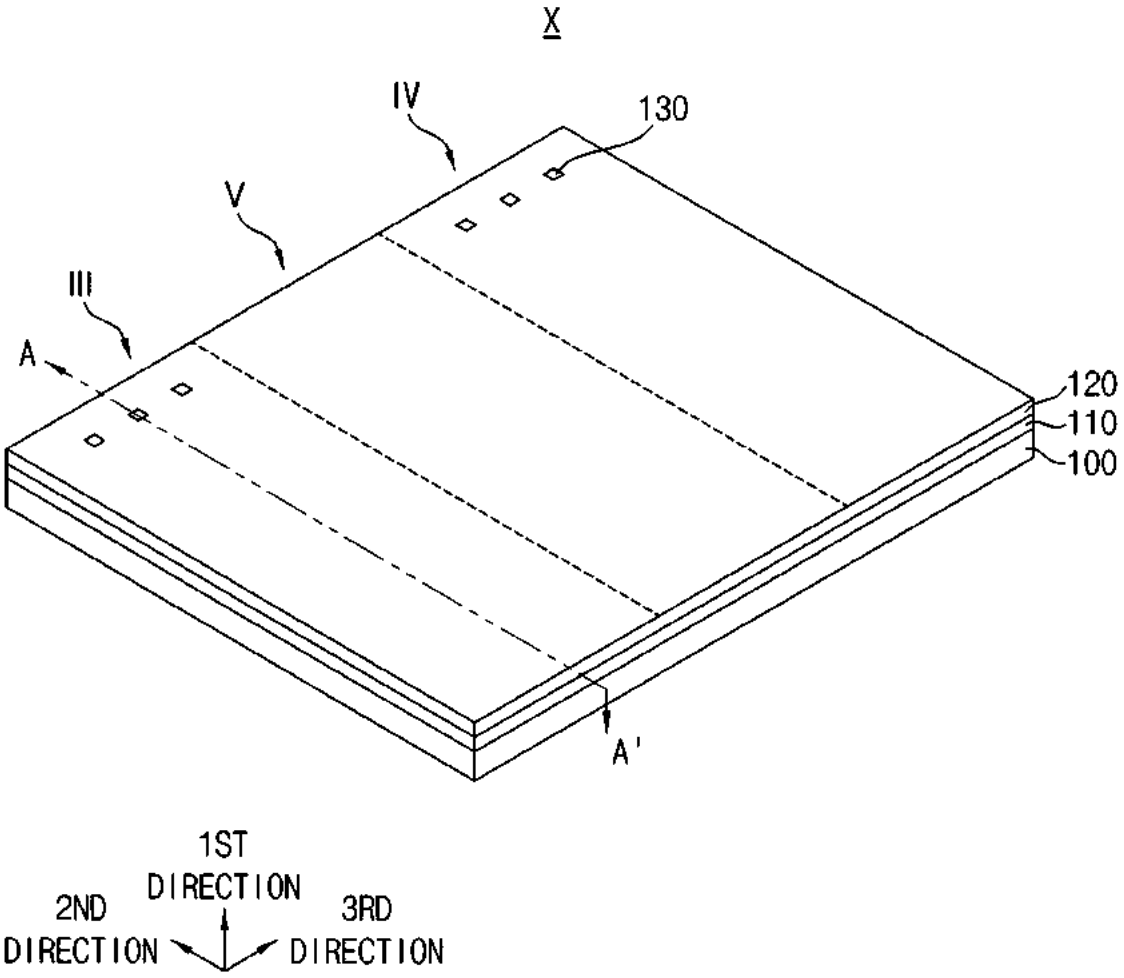
X
IV
130
V
III
A
120
110
100
A'
1ST
DIRECTION
2ND
DIRECTION
3RD
DIRECTION

FIG. 4

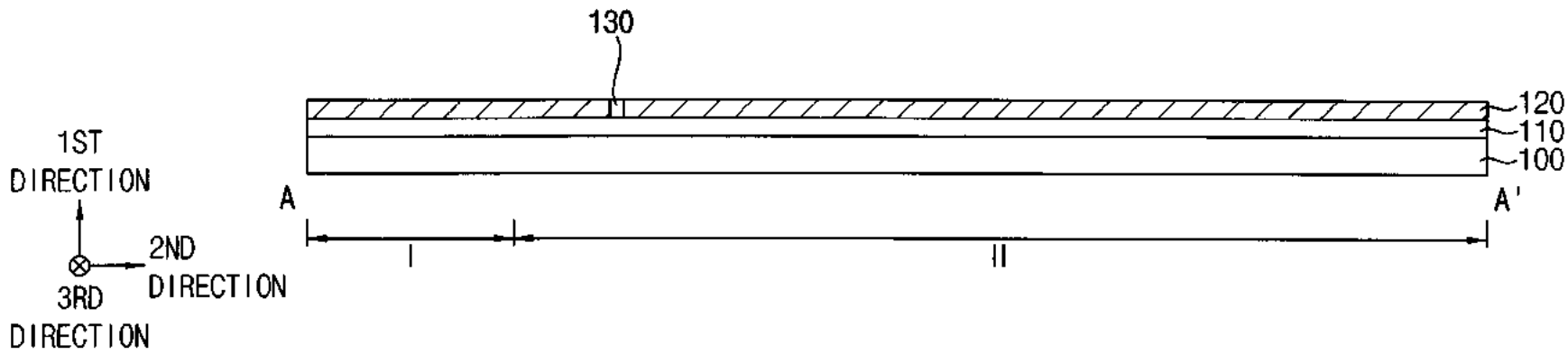
130
120
110
100
A
A'
I
II
1ST
DIRECTION
2ND
DIRECTION
3RD
DIRECTION

FIG. 5

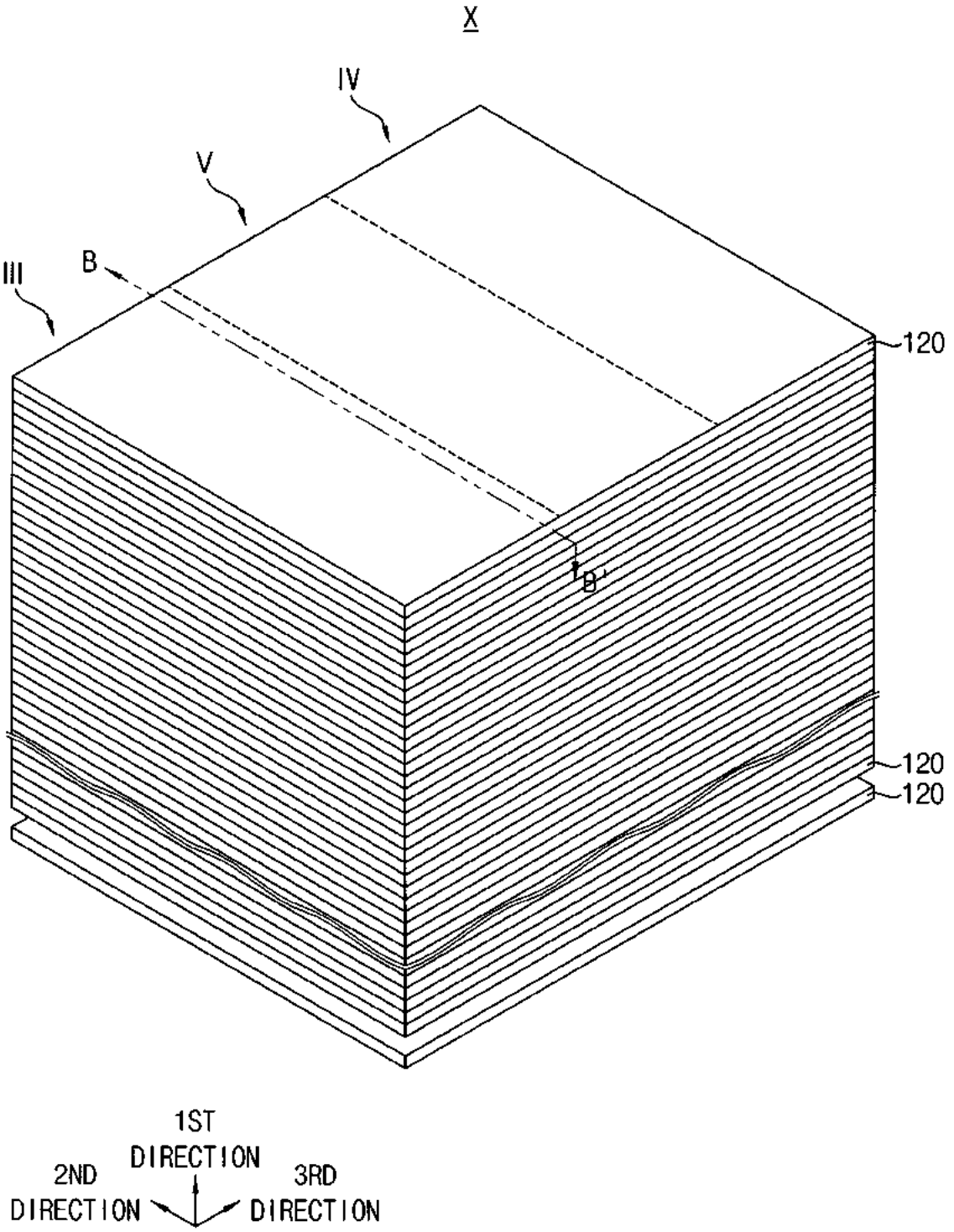
X
IV
V
III
B
B'
120
120
120
1ST
DIRECTION
2ND
DIRECTION
3RD
DIRECTION

FIG. 6

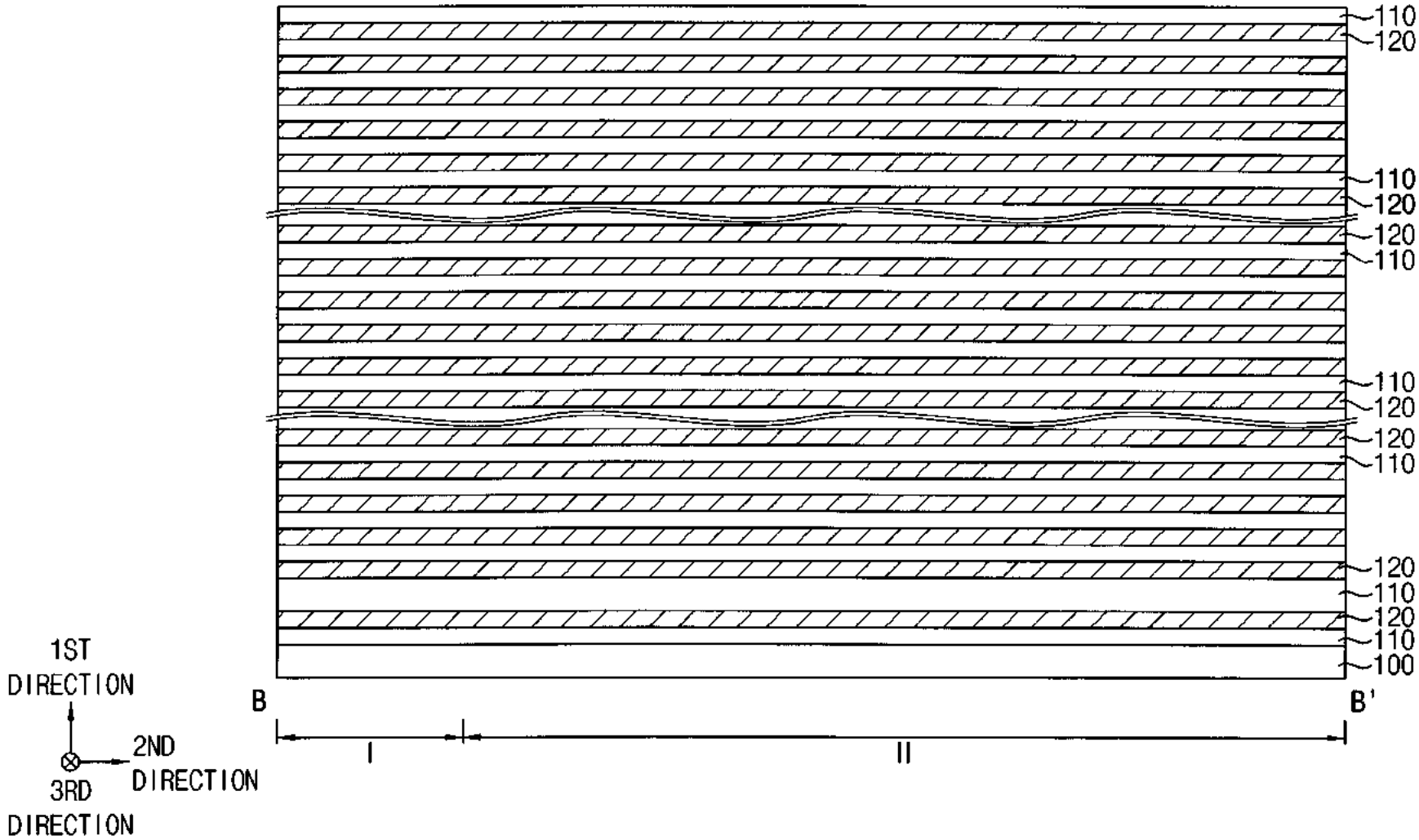
110
120
110
120
120
110
110
120
120
110
120
110
120
110
100
B
B'
I
II
1ST DIRECTION
2ND DIRECTION
3RD DIRECTION

FIG. 7

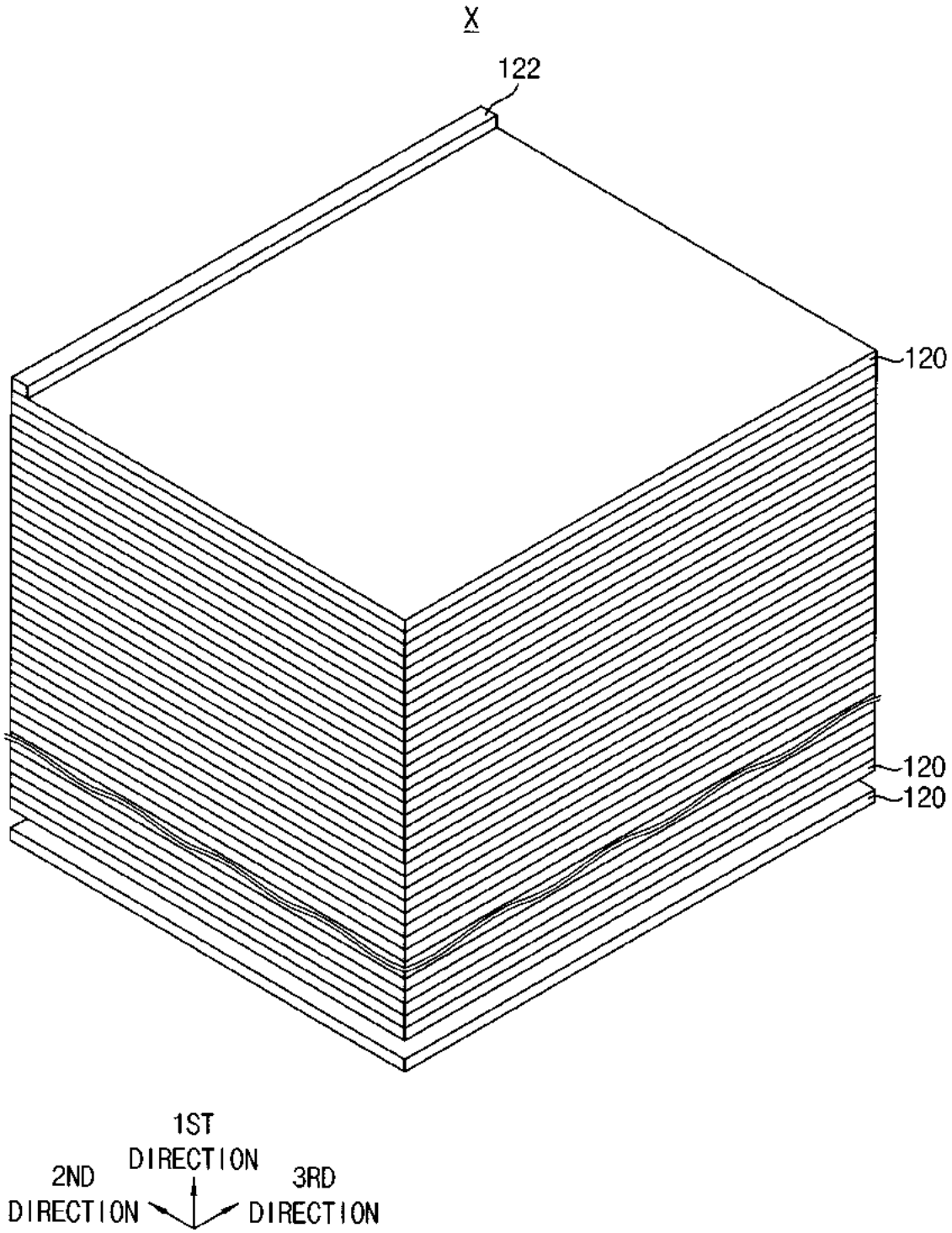

FIG. 8

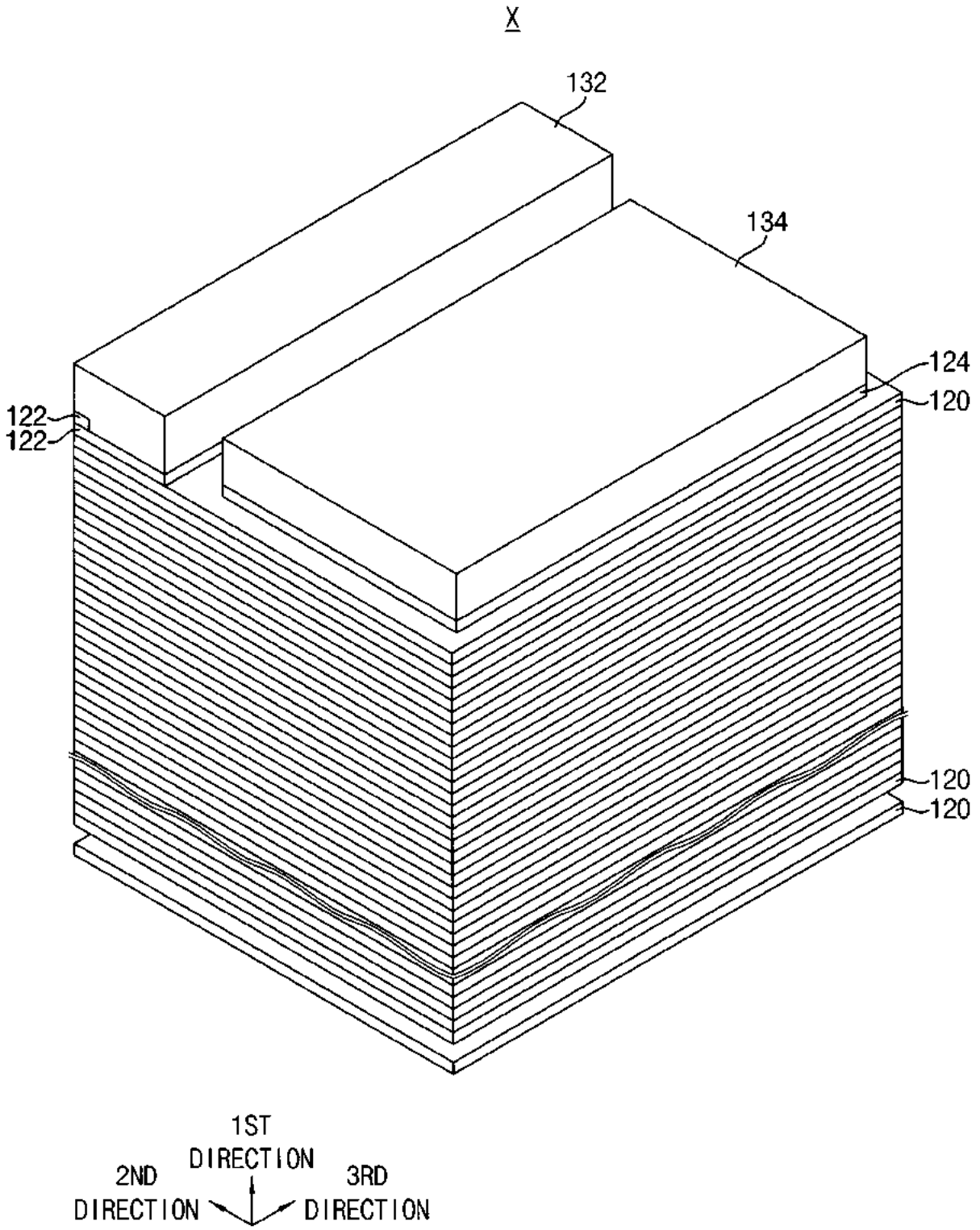
X
132
134
124
120
122
122
120
120
1ST
DIRECTION
2ND
DIRECTION
3RD
DIRECTION

FIG. 9

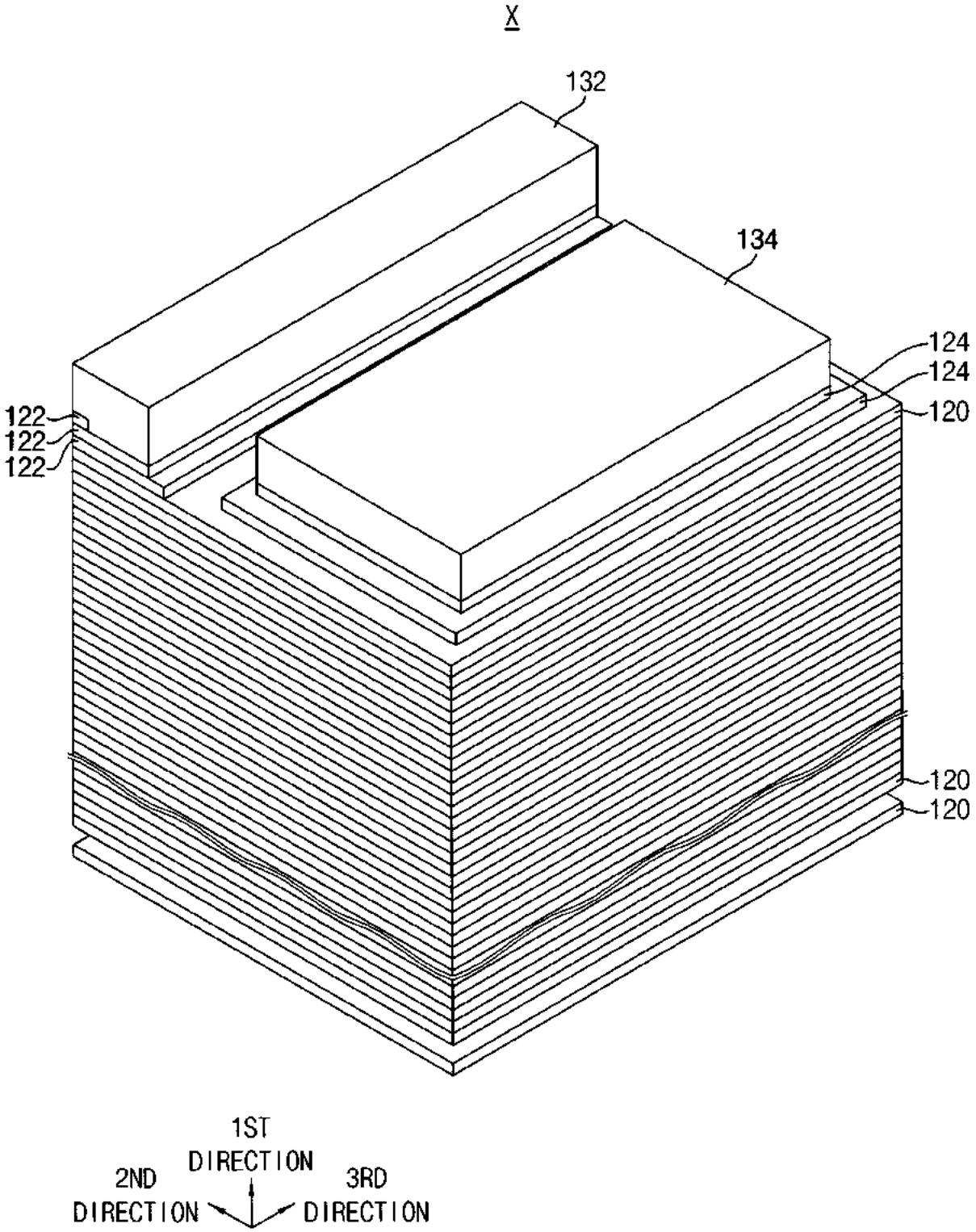
X
132
134
124
124
120
122
122
122
120
120
1ST
DIRECTION
2ND
DIRECTION
3RD
DIRECTION

FIG. 10

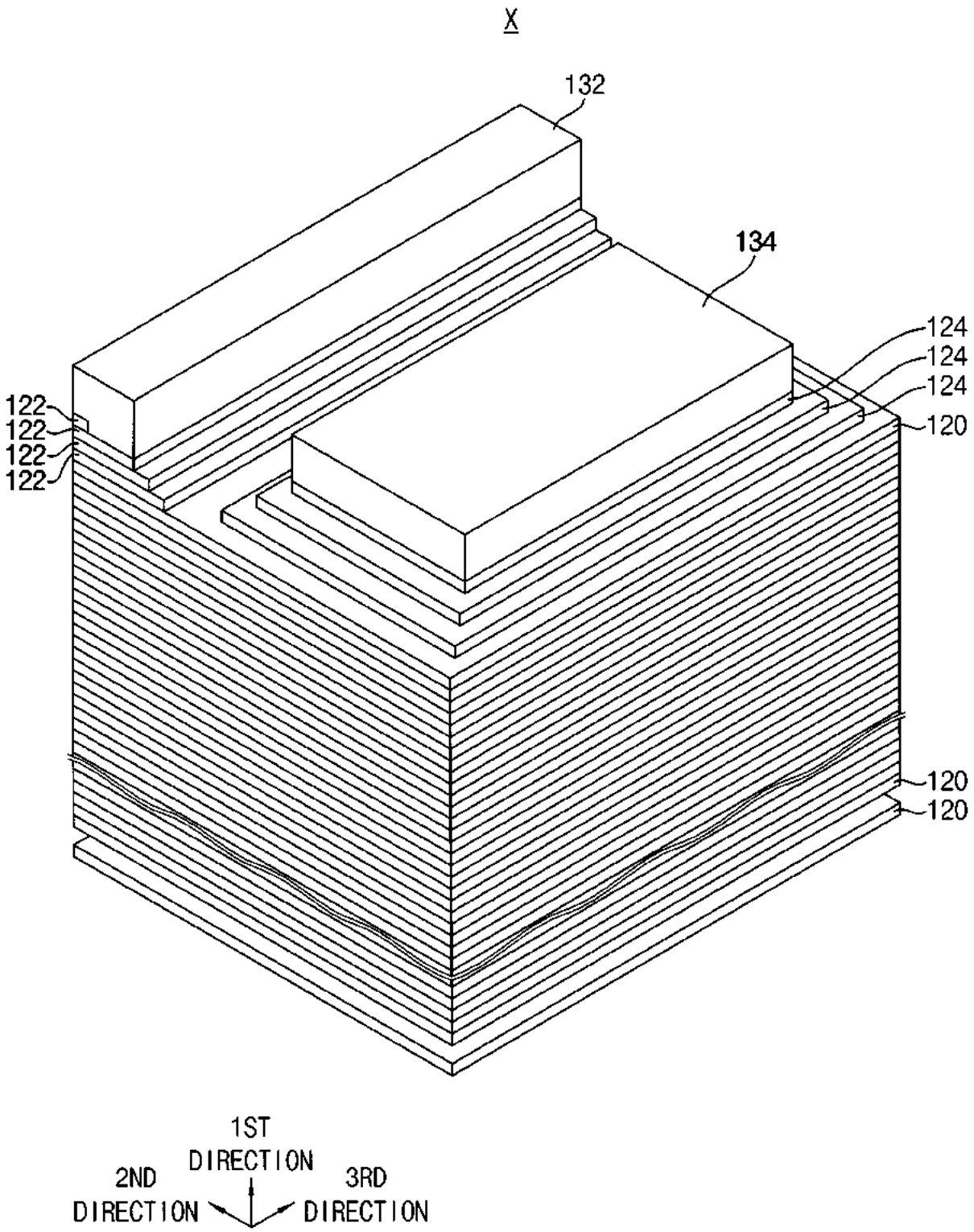
X
132
134
124
124
124
120
122
122
122
122
120
120
1ST
DIRECTION
2ND
DIRECTION
3RD
DIRECTION

FIG. 11

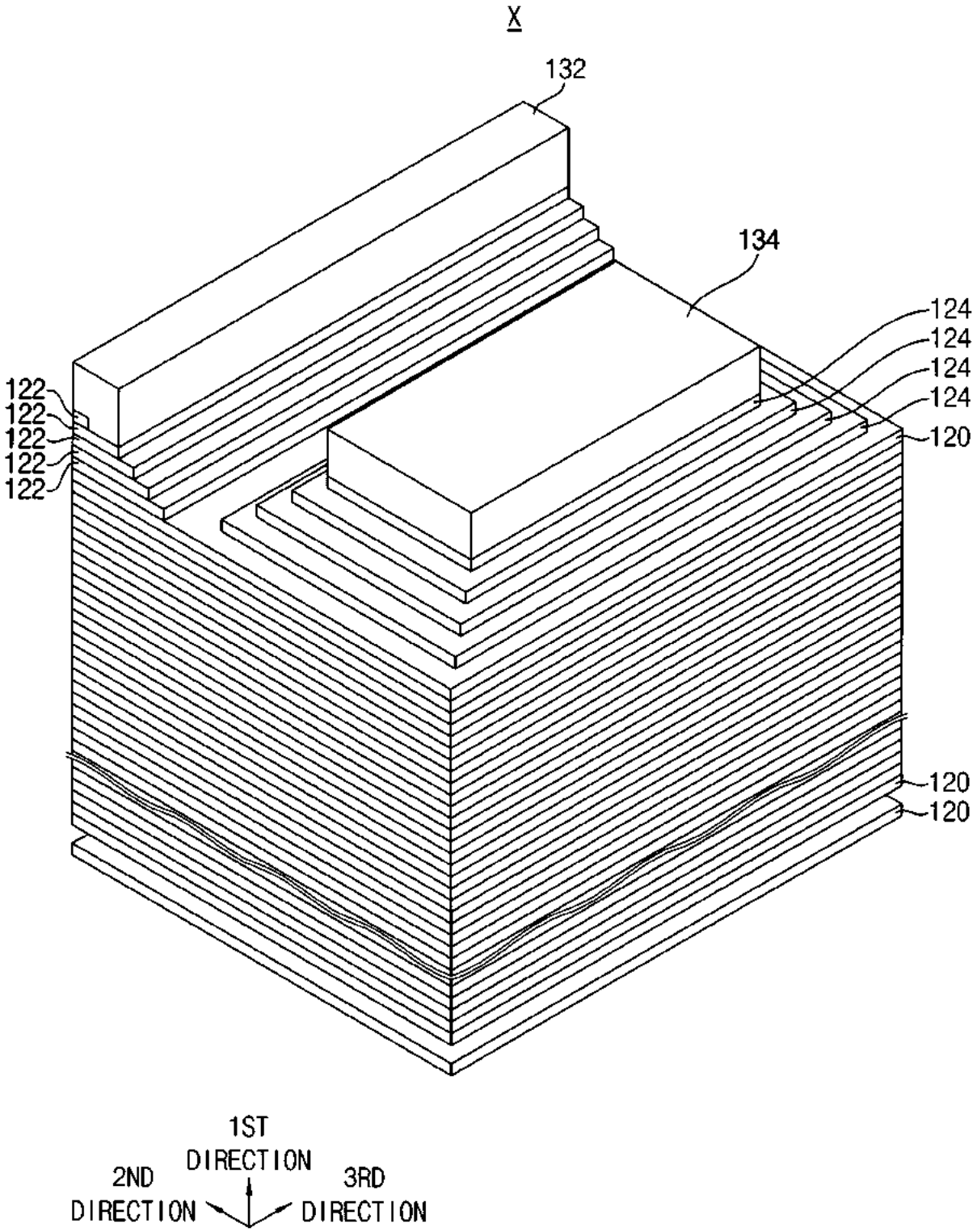
X
132
134
124
124
124
124
120
122
122
122
122
122
120
120
1ST
DIRECTION
2ND
DIRECTION
3RD
DIRECTION

FIG. 12

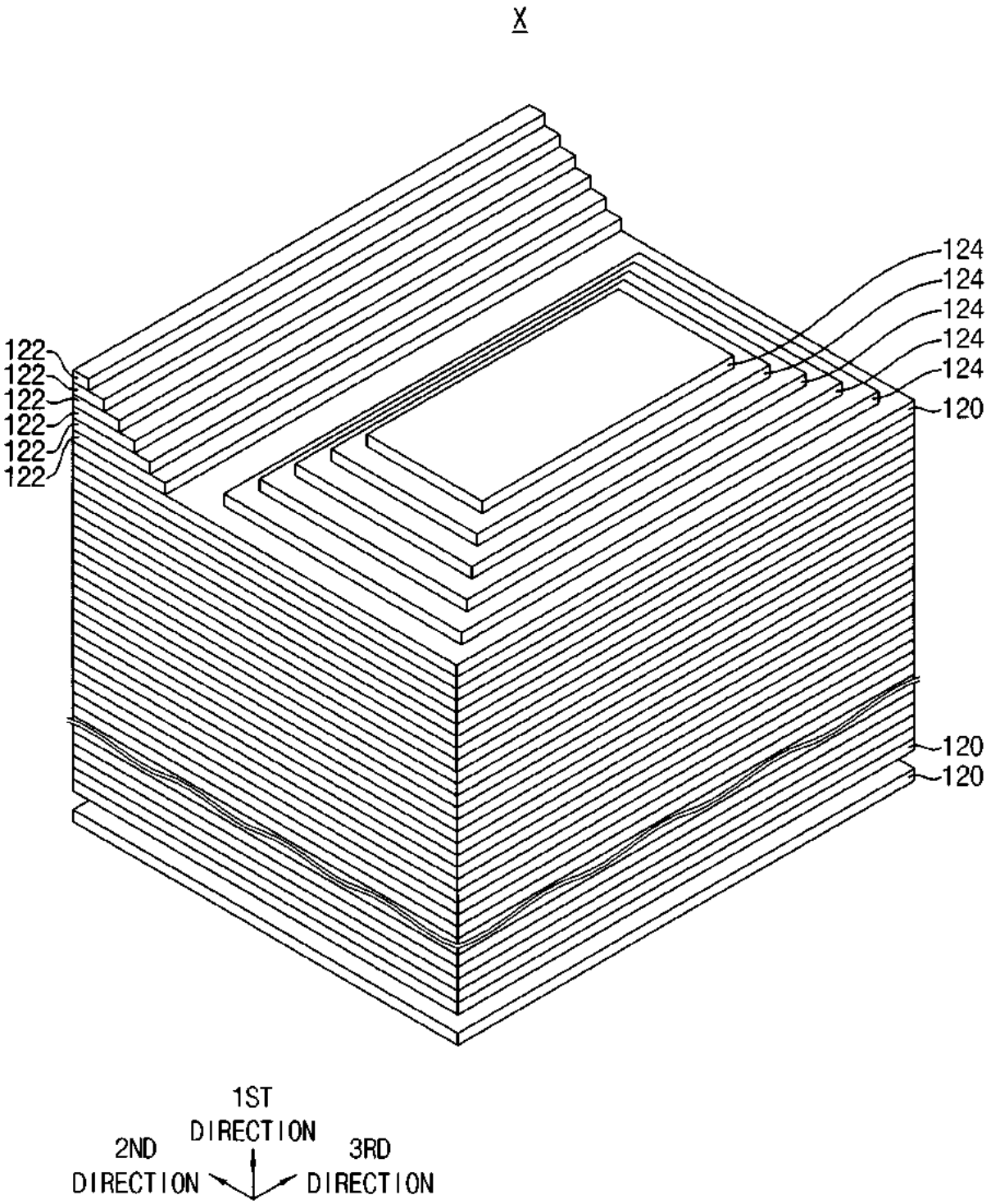
X
124
124
124
124
124
120
122
122
122
122
122
122
120
120
1ST
DIRECTION
2ND
DIRECTION
3RD
DIRECTION

FIG. 13

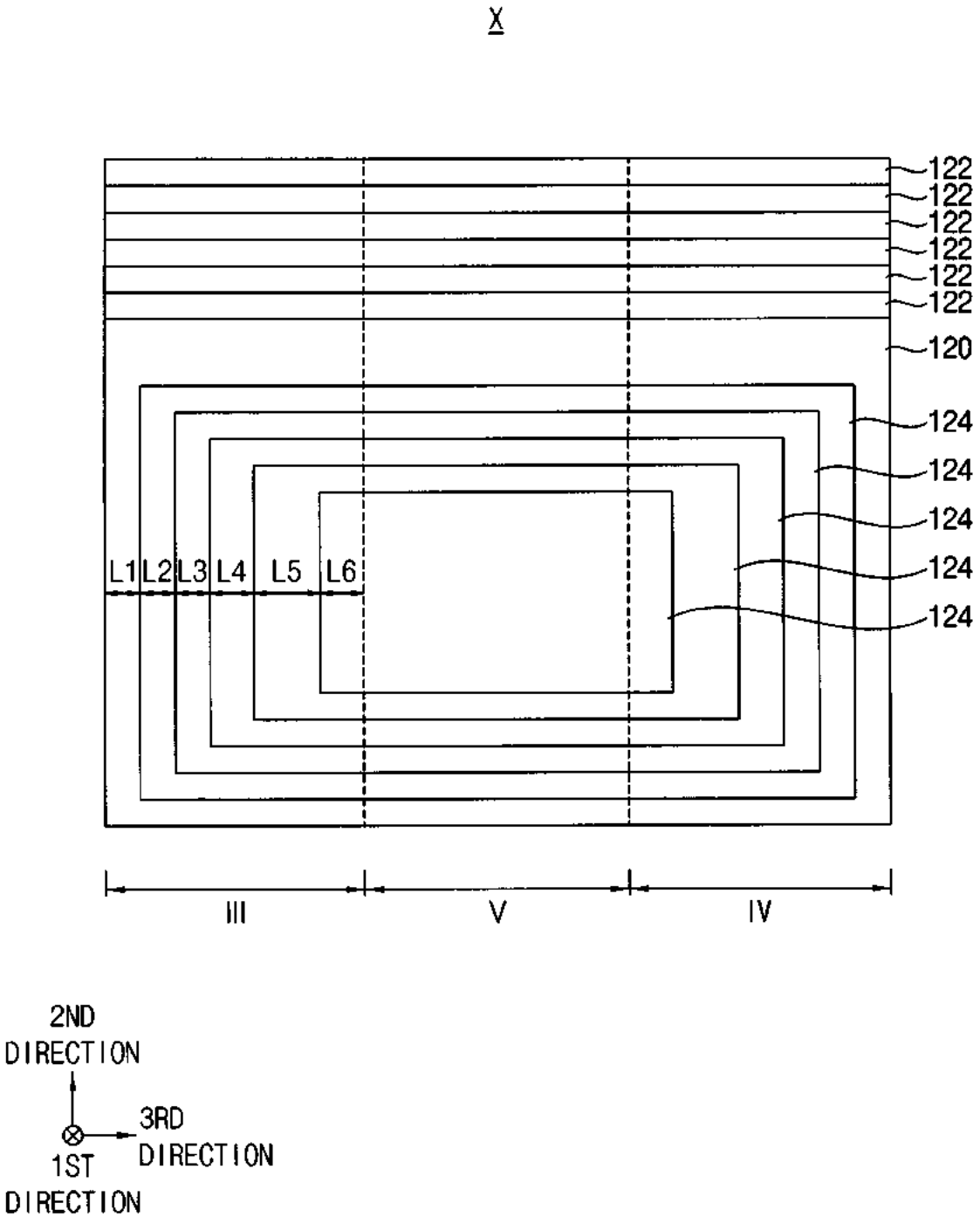
X
122
122
122
122
122
122
120
124
124
124
124
124
L1
L2
L3
L4
L5
L6
III
V
IV
2ND DIRECTION
3RD DIRECTION
1ST DIRECTION

FIG. 14

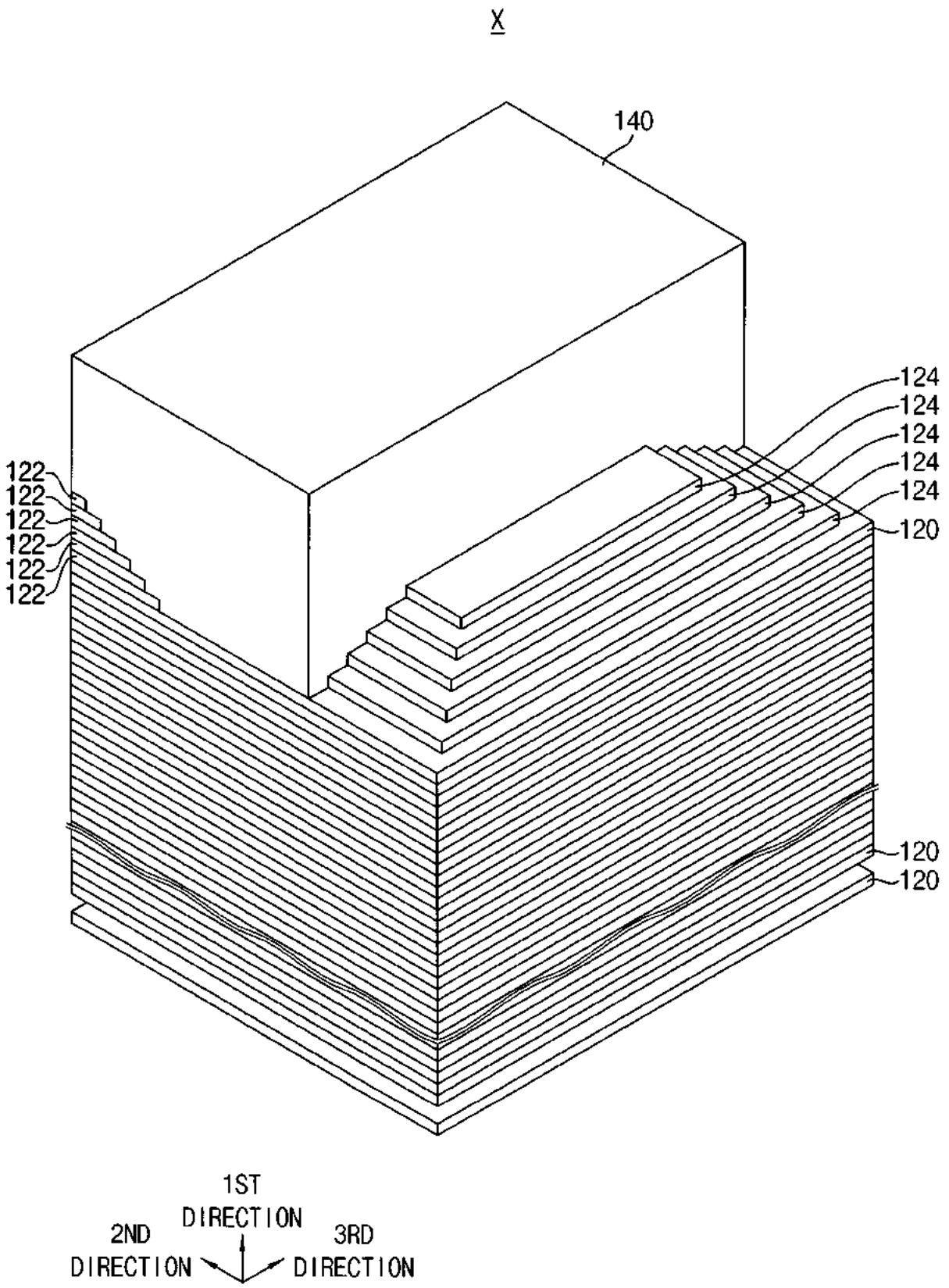
X
140
124
124
124
124
124
120
122
122
122
122
122
122
120
120
1ST
DIRECTION
2ND
DIRECTION
3RD
DIRECTION

FIG. 15

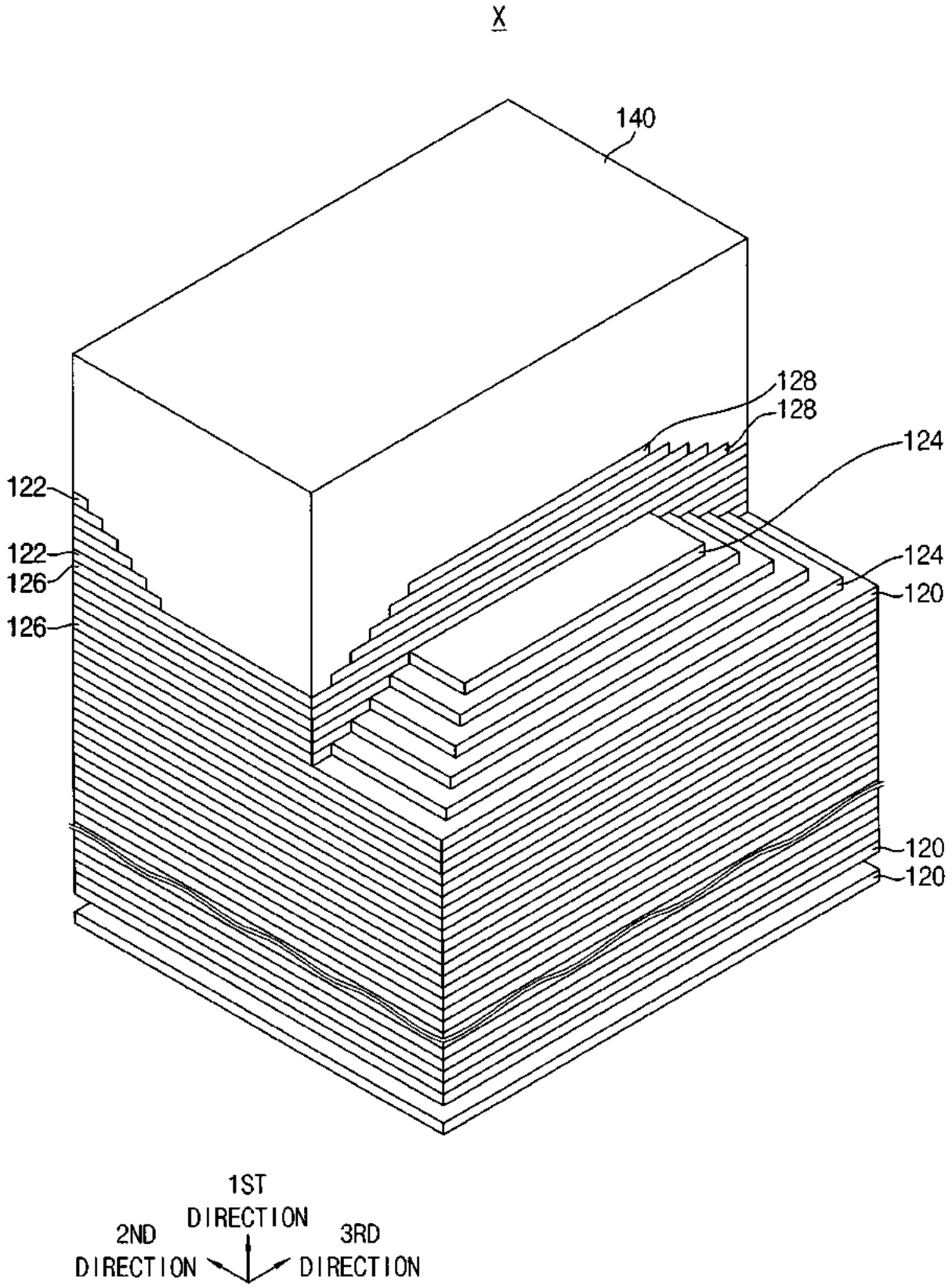
X
140
128
128
124
122
122
126
126
124
120
120
120
1ST
DIRECTION
2ND
DIRECTION
3RD
DIRECTION

FIG. 16

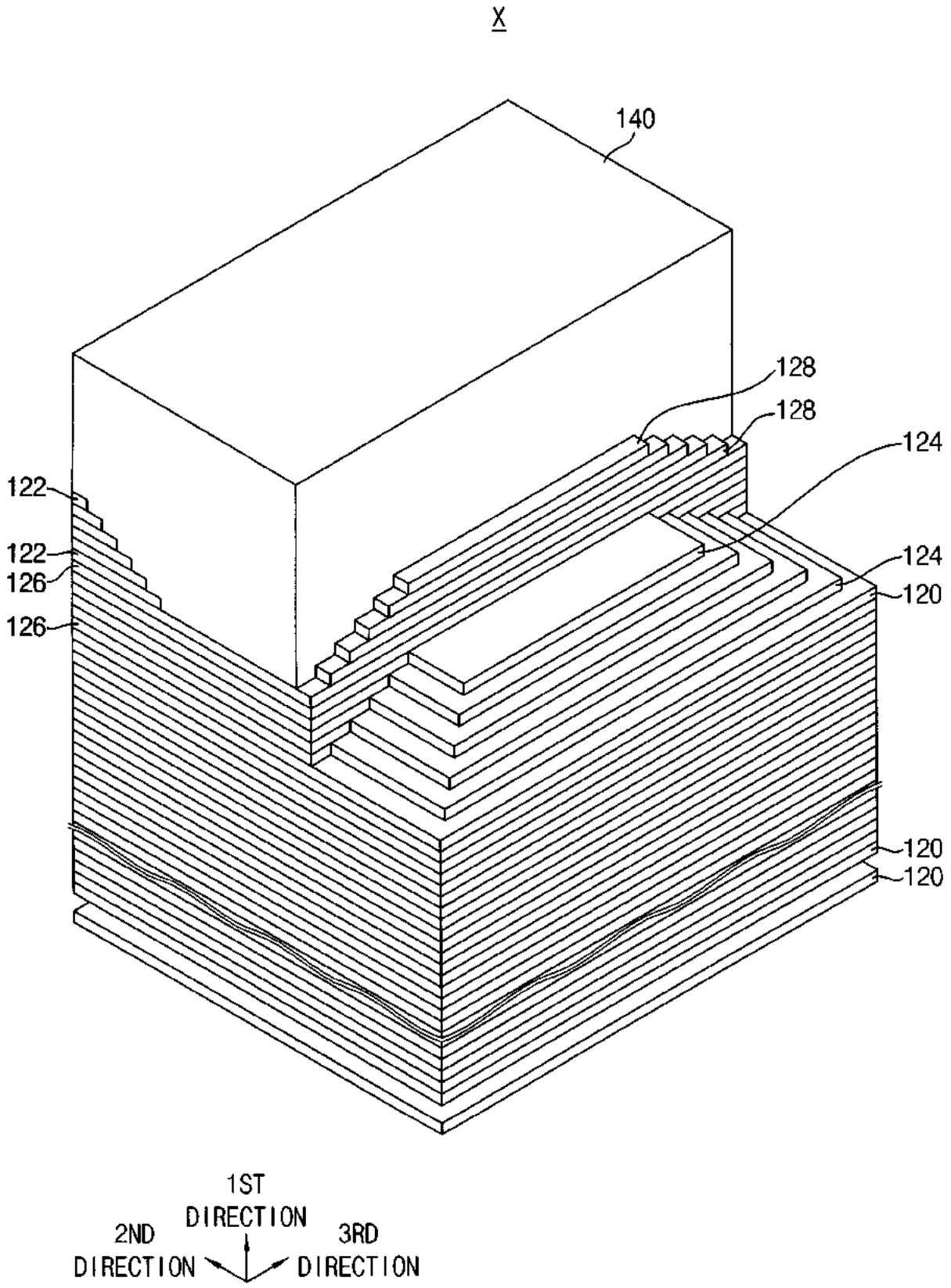
X
140
128
128
124
124
120
122
122
126
126
120
120
1ST
DIRECTION
2ND
DIRECTION
3RD
DIRECTION

FIG. 17

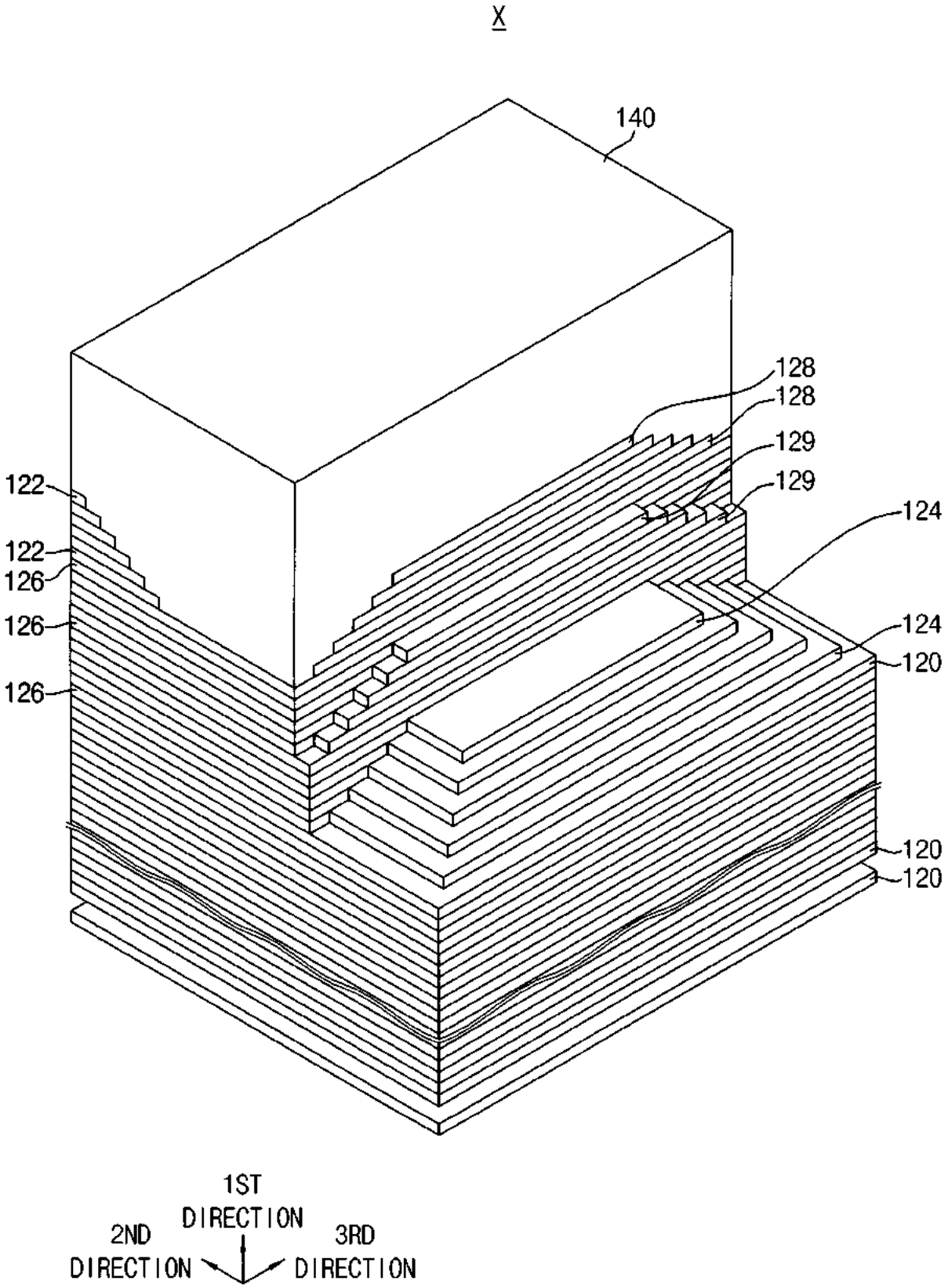
X
140
128
128
129
129
124
124
120
120
120
122
122
126
126
126
1ST
DIRECTION
2ND
DIRECTION
3RD
DIRECTION

FIG. 18

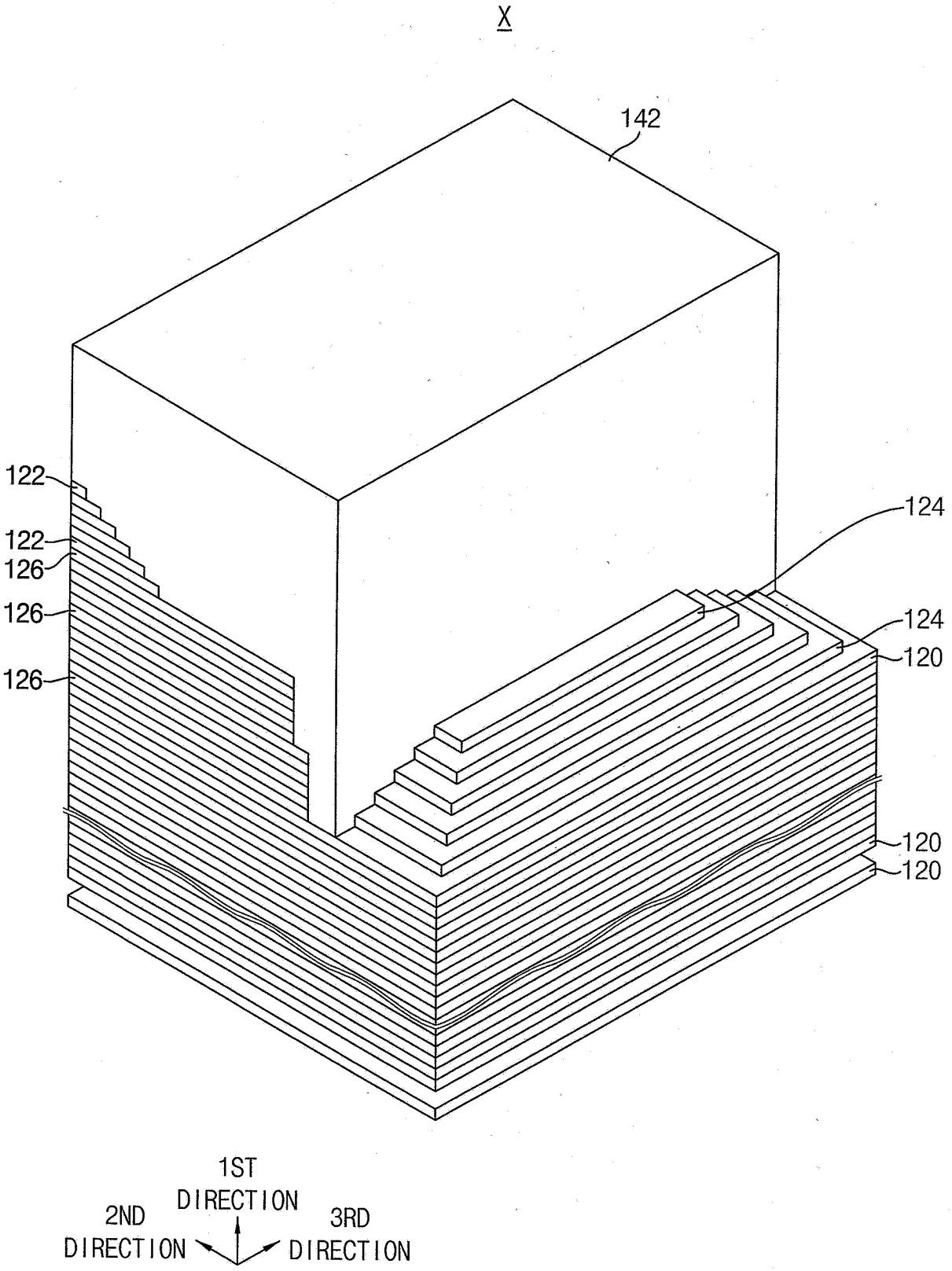
X
142
122
122
126
126
126
124
124
120
120
120
1ST
DIRECTION
2ND
DIRECTION
3RD
DIRECTION

FIG. 19

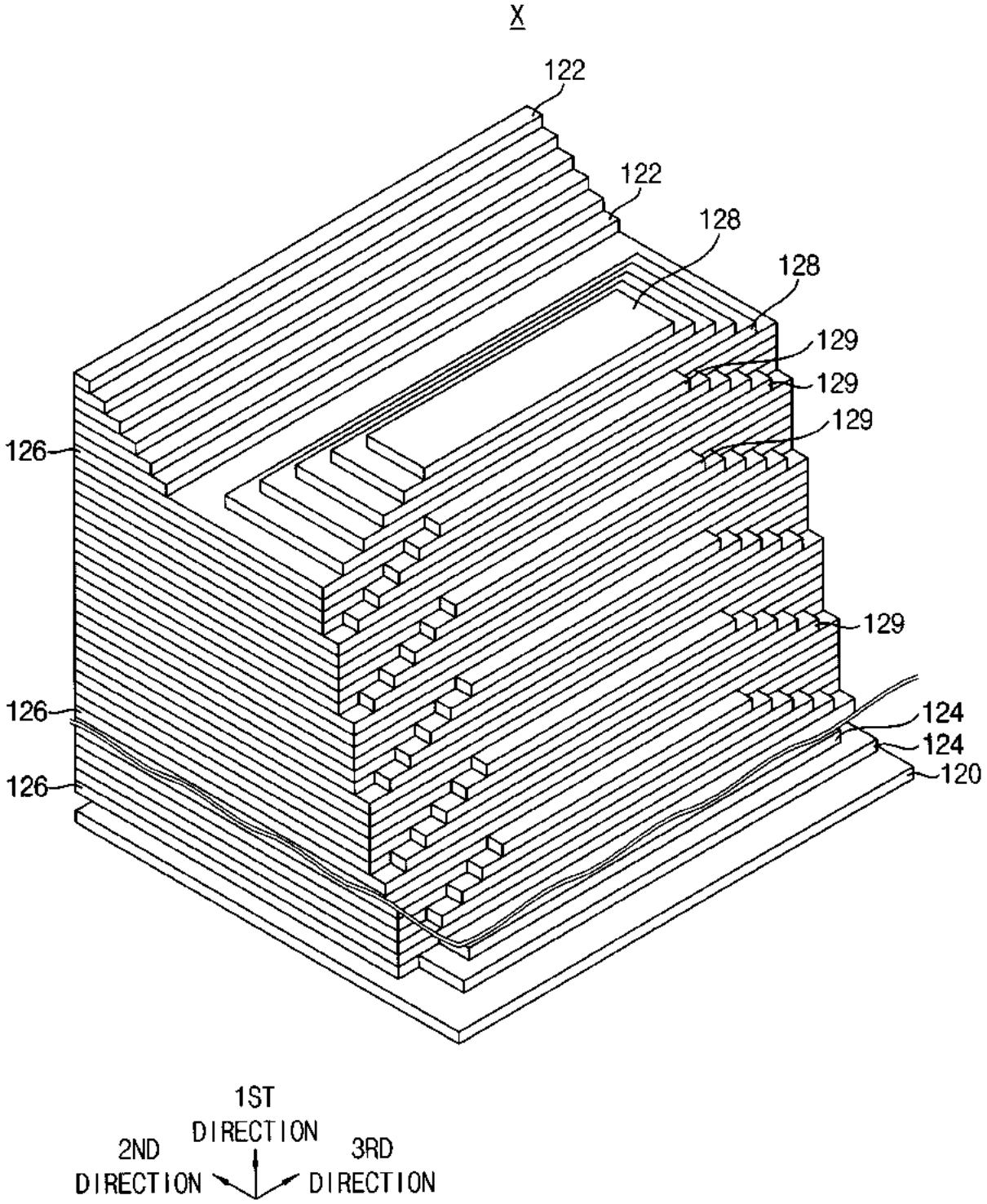
X
122
122
128
128
129
129
129
126
129
126
124
124
126
120
1ST
DIRECTION
2ND
DIRECTION
3RD
DIRECTION

FIG. 20

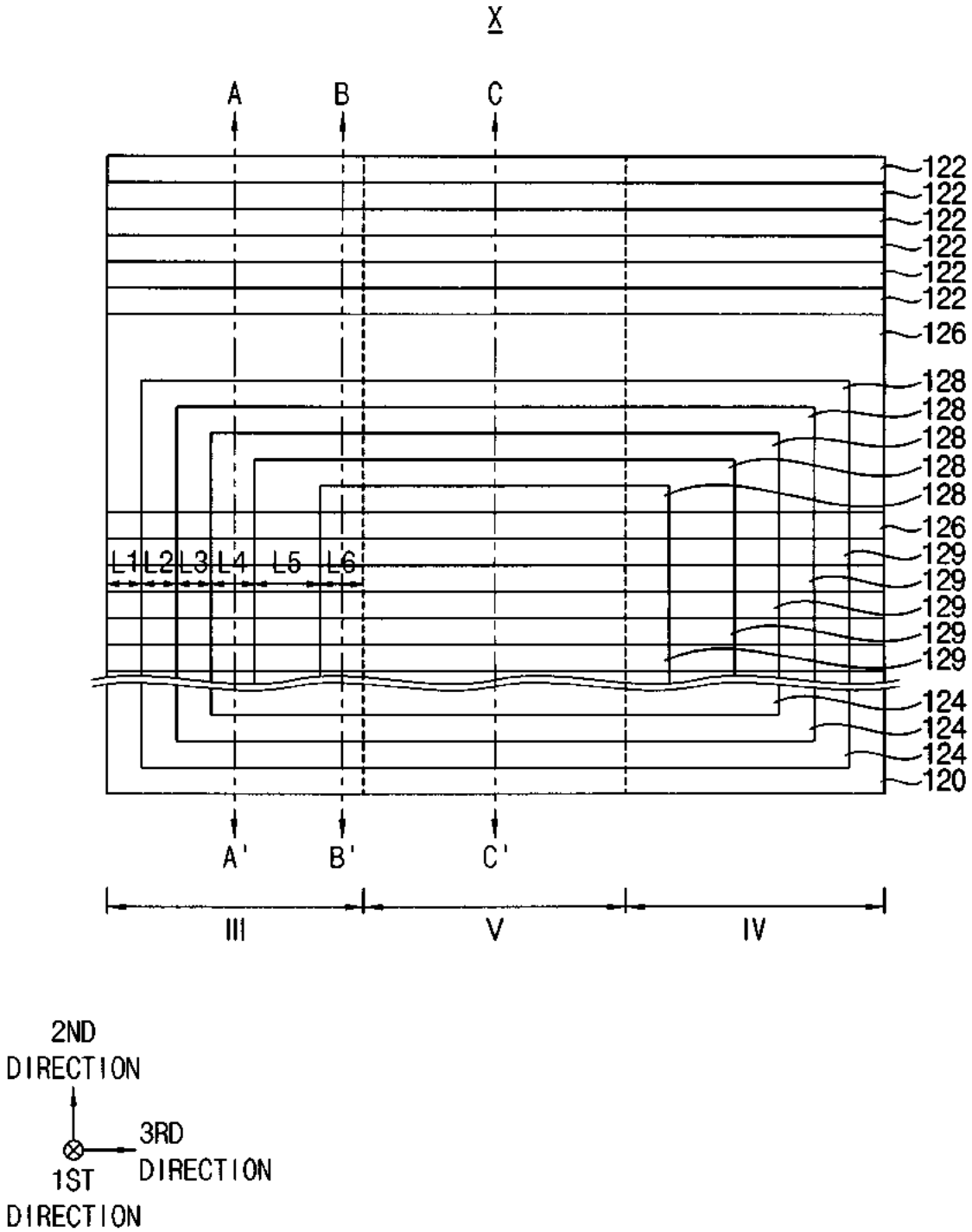
X
A
B
C
122
122
122
122
122
122
126
128
128
128
128
128
126
129
129
129
129
129
124
124
124
120
L1
L2
L3
L4
L5
L6
A'
B'
C'
III
V
IV
2ND DIRECTION
3RD DIRECTION
1ST DIRECTION

FIG. 21

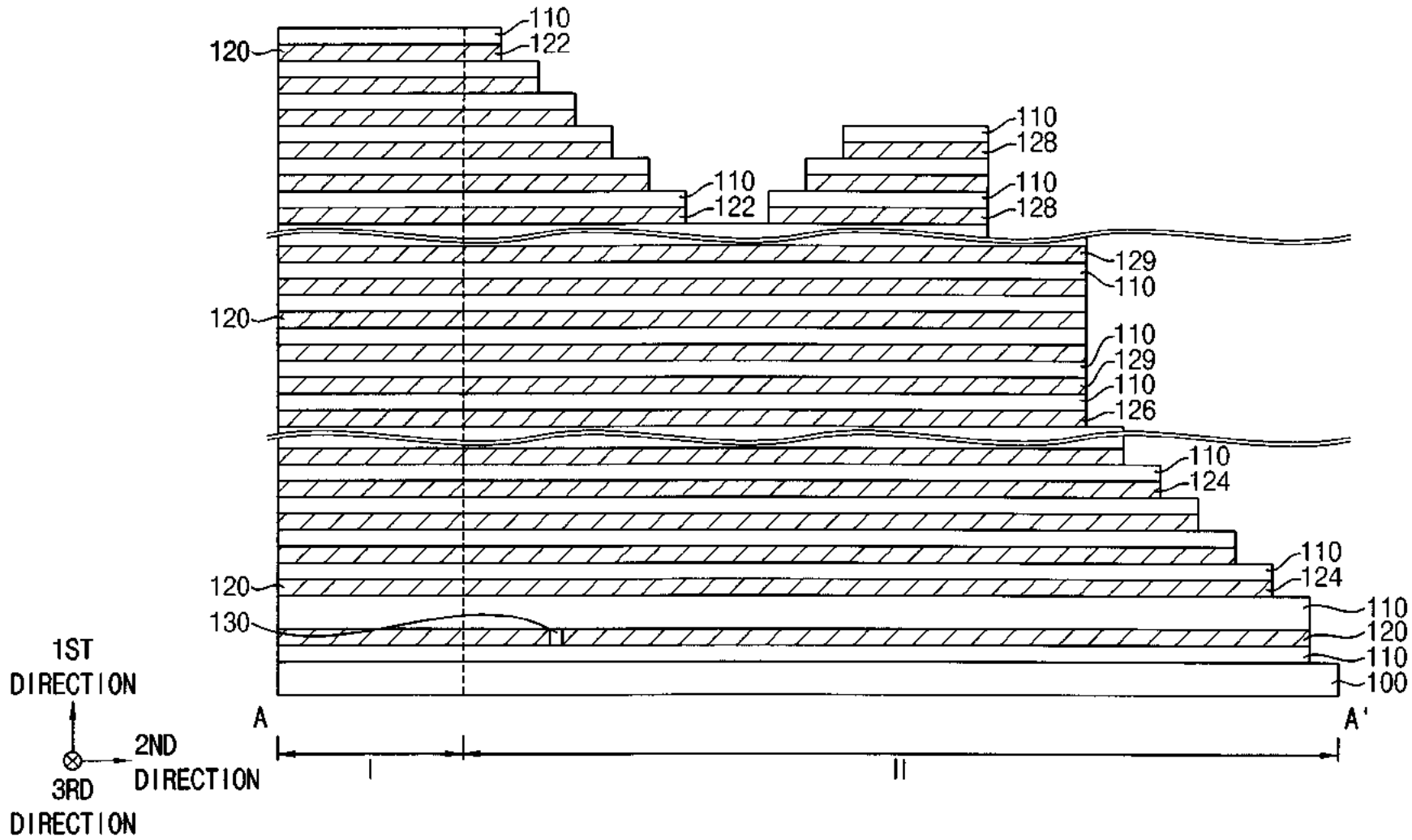
110
122
120
110
128
110
122
110
128
129
110
120
110
129
110
126
110
124
110
124
120
130
110
120
110
100
1ST DIRECTION
2ND DIRECTION
3RD DIRECTION
A
A'
I
II

FIG. 22

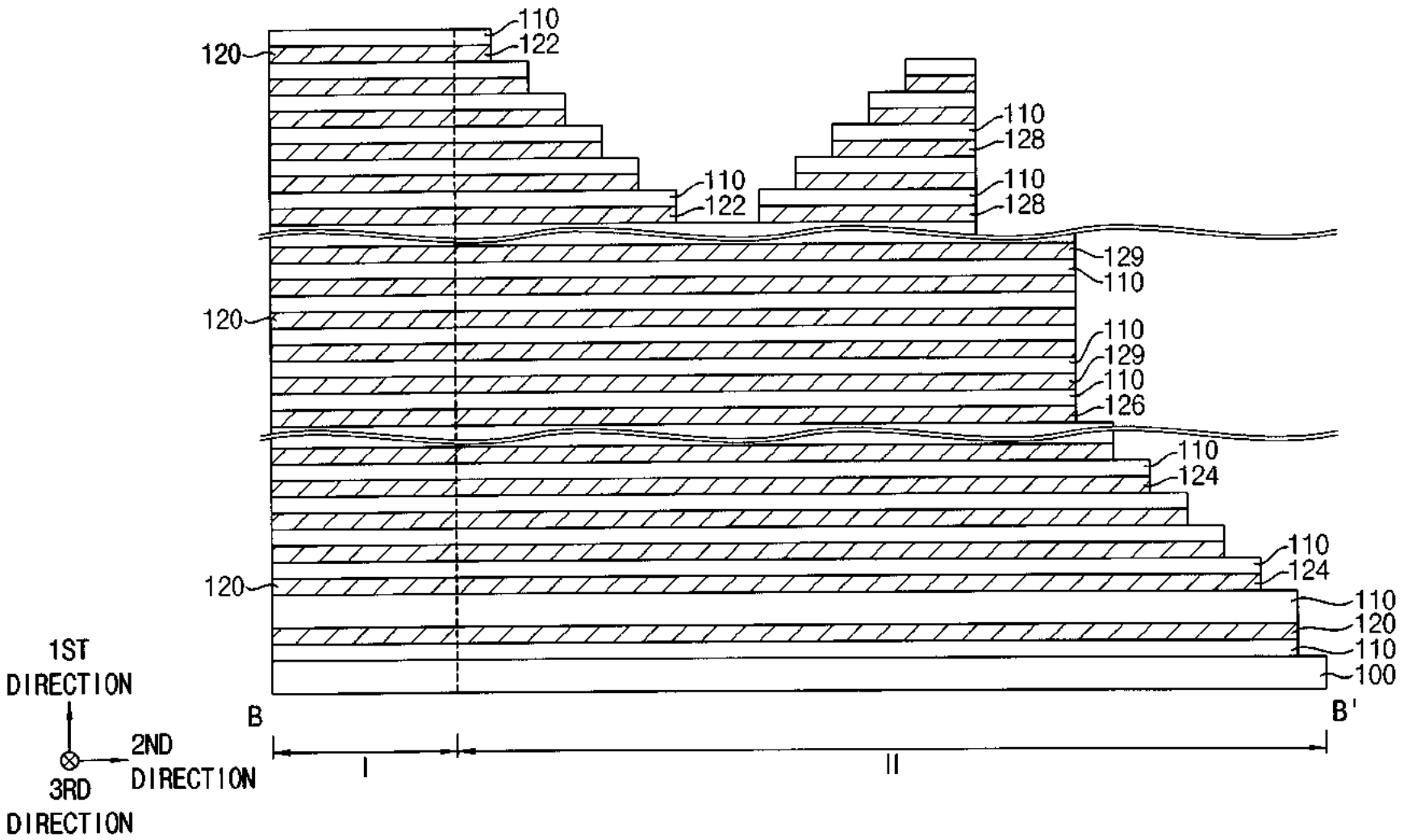
110
122
120
110
128
110
128
110
122
129
110
120
110
129
110
126
110
124
110
124
120
110
120
110
100
1ST DIRECTION
2ND DIRECTION
3RD DIRECTION
B
B'
I
II

FIG. 23

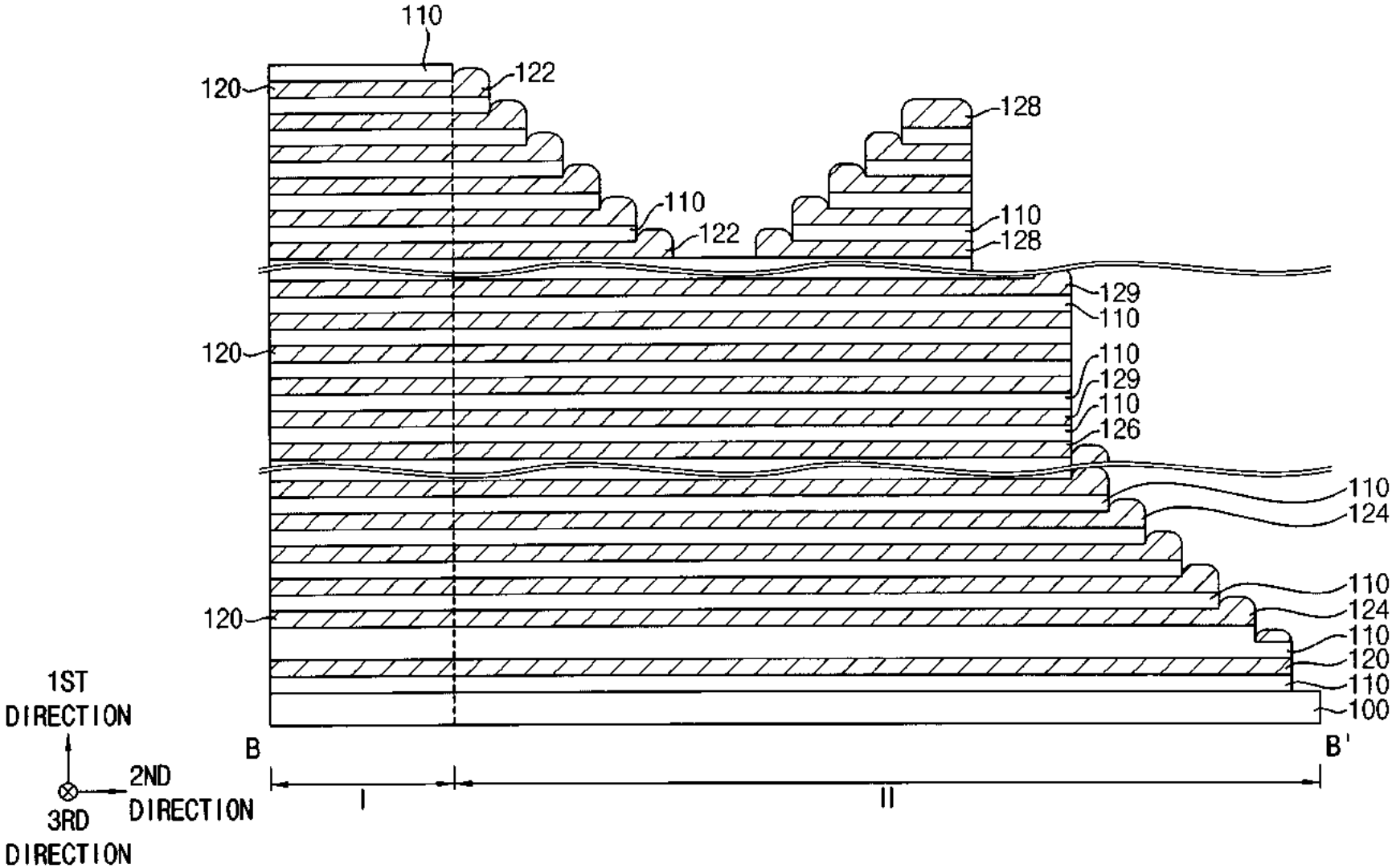
110
120
122
128
110
122
110
128
129
110
120
110
129
110
126
110
124
110
120
124
110
120
110
100
1ST DIRECTION
2ND DIRECTION
3RD DIRECTION
B
B'
I
II

FIG. 24

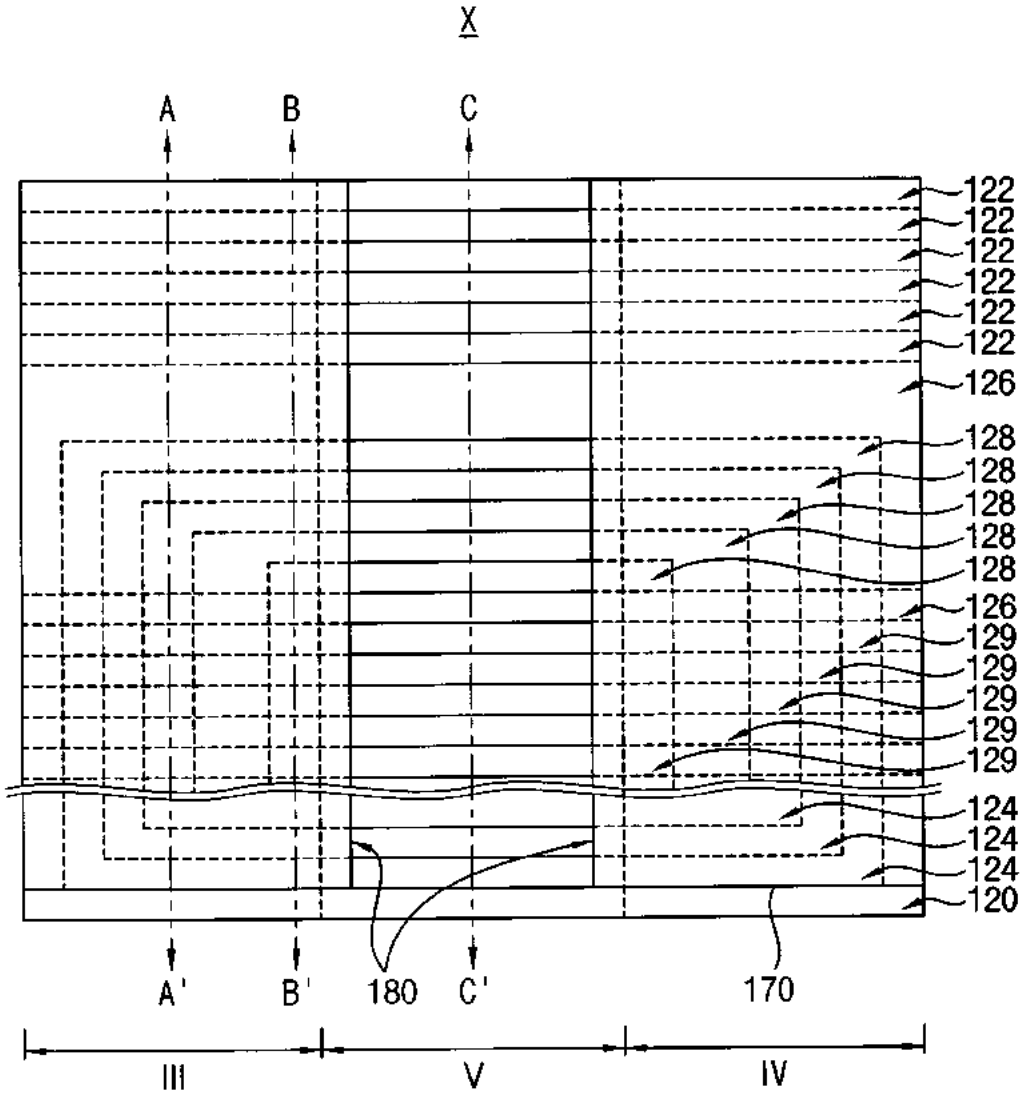
X
A
B
C
122
122
122
122
122
122
126
128
128
128
128
128
126
129
129
129
129
129
124
124
124
120
A'
B'
180
C'
170
III
V
IV

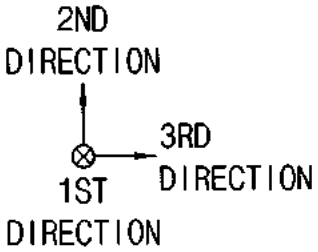
2ND
DIRECTION
3RD
DIRECTION
1ST
DIRECTION

FIG. 25

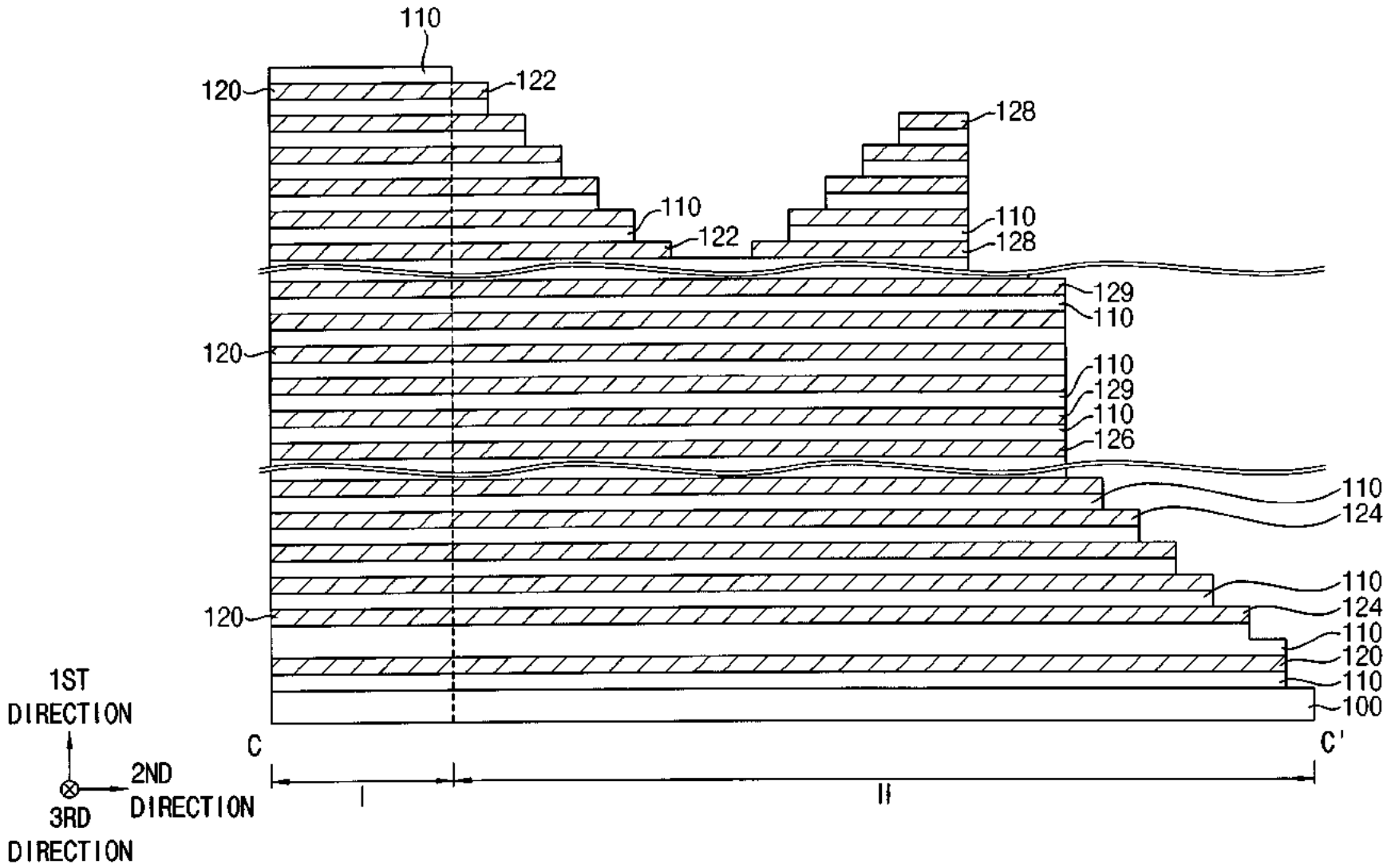
110
120
122
128
110
122
110
128
129
110
120
110
129
110
126
110
124
110
120
124
110
120
110
100
1ST DIRECTION
2ND DIRECTION
3RD DIRECTION
C
C'
I
II

FIG. 26

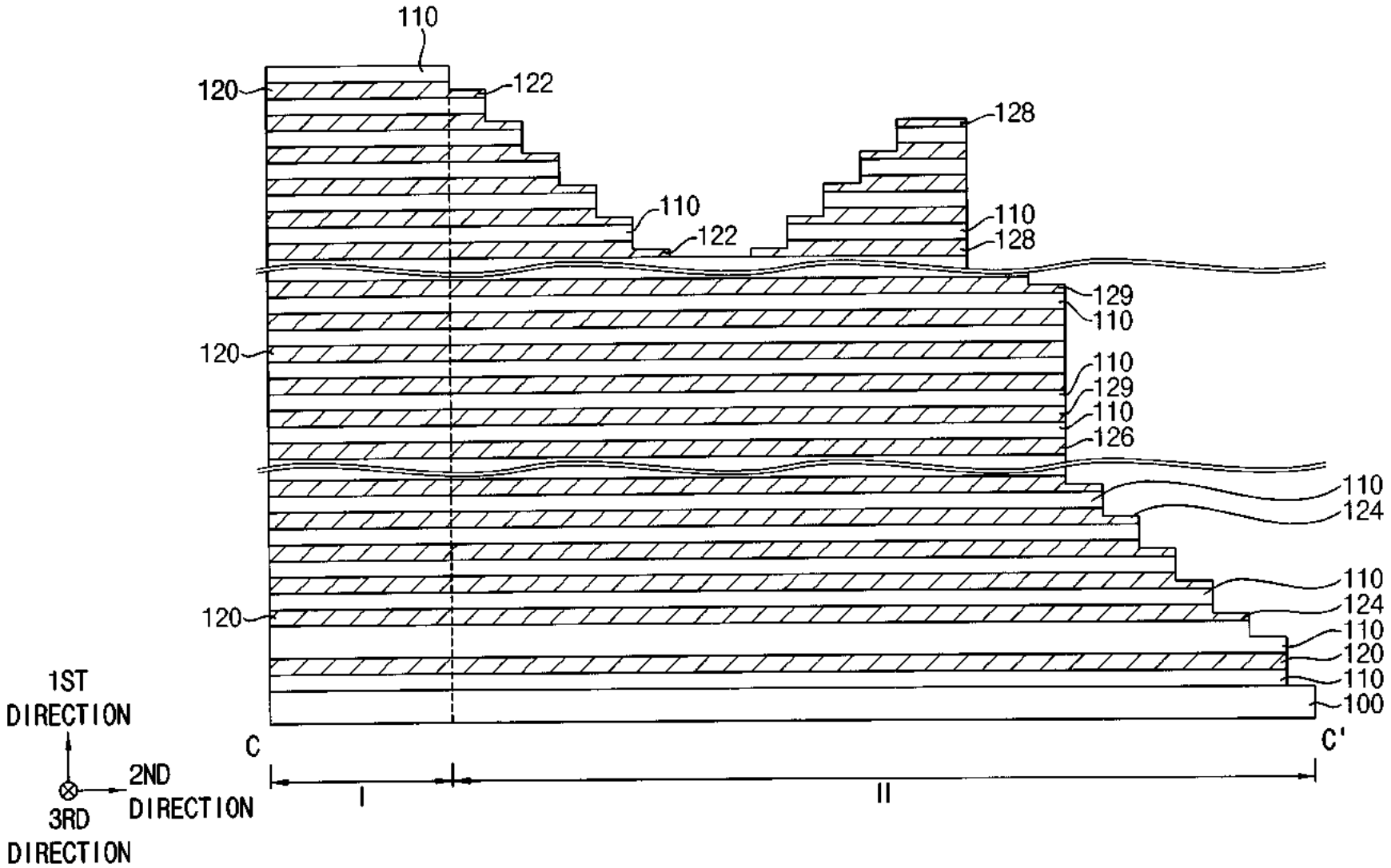
110
120
122
128
110
122
110
128
129
110
120
110
129
110
126
110
124
110
124
120
110
120
110
100
1ST DIRECTION
2ND DIRECTION
3RD DIRECTION
C
C'
I
II

FIG. 27

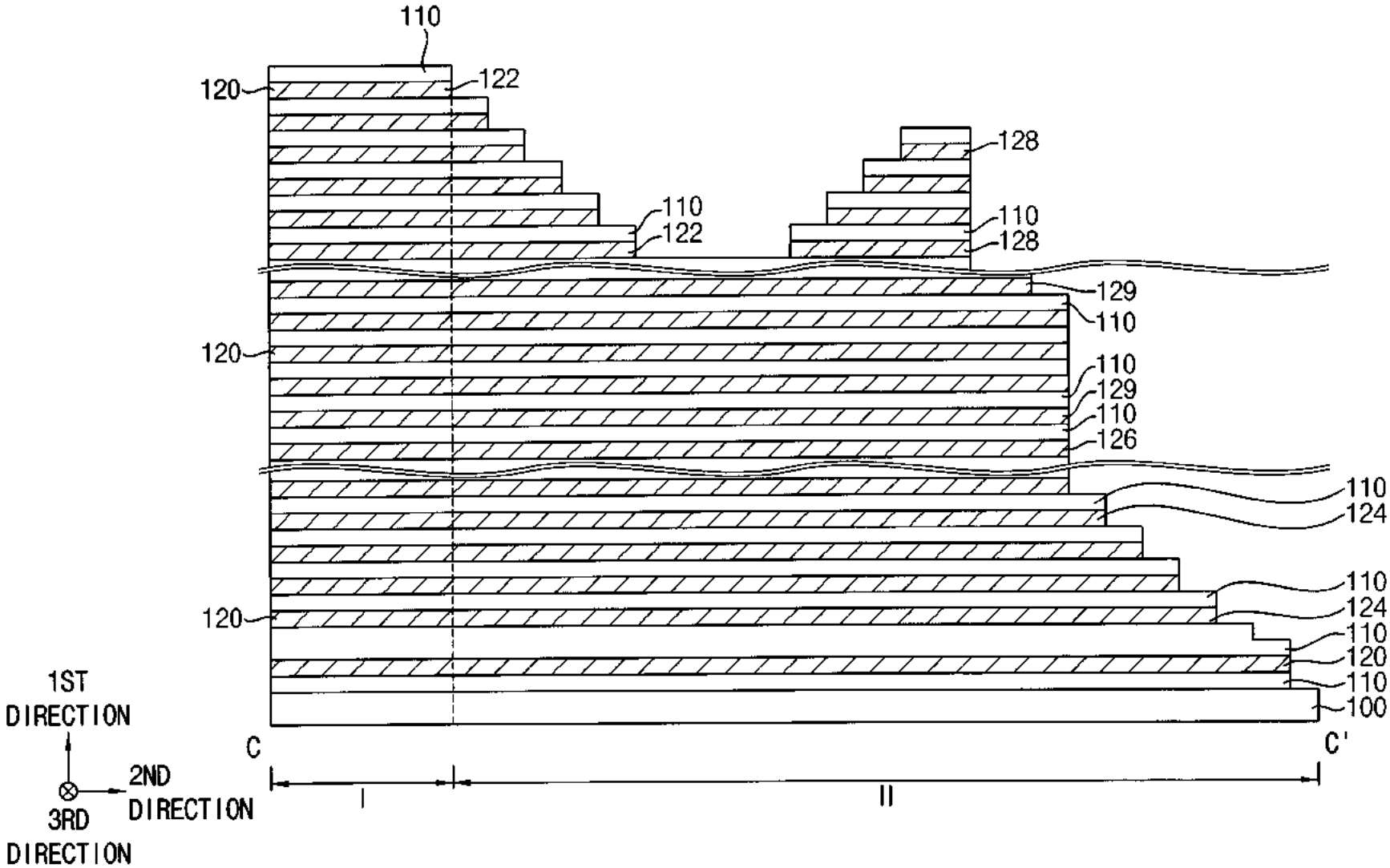
110
120
122
128
110
122
110
128
129
110
120
110
129
110
126
110
124
110
124
120
110
120
110
100
1ST DIRECTION
2ND DIRECTION
3RD DIRECTION
C
C'
I
II

FIG. 28

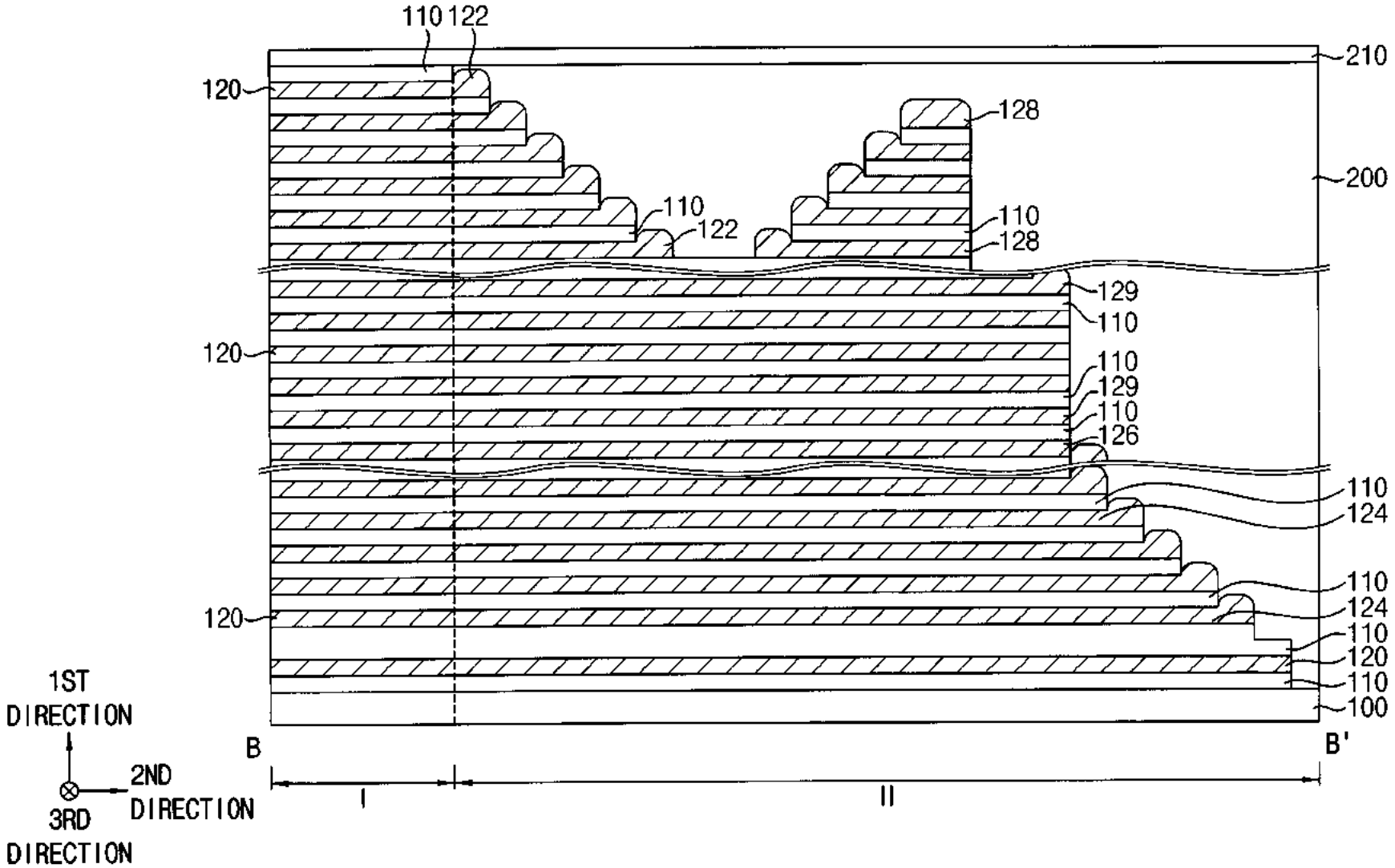
110
122
120
210
128
200
110
122
110
128
129
110
120
110
129
110
126
110
124
110
124
120
110
120
110
100
1ST DIRECTION
2ND DIRECTION
3RD DIRECTION
B
B'
I
II

FIG. 29

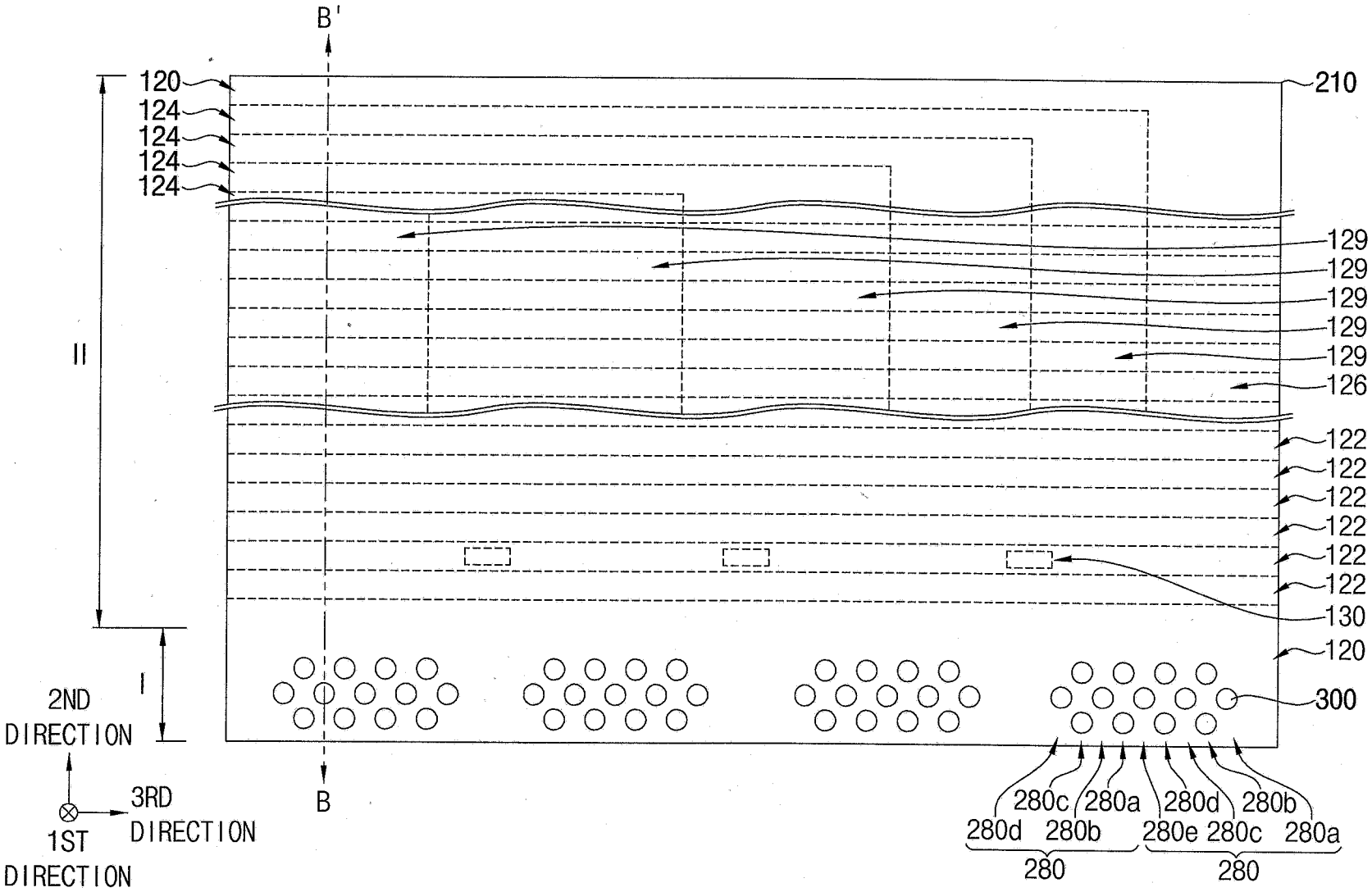
B'
120
124
124
124
124
210
129
129
129
129
129
126
122
122
122
122
122
122
130
120
300
II
I
2ND DIRECTION
3RD DIRECTION
1ST DIRECTION
B
280c
280a
280d
280b
280d
280b
280e
280c
280a
280
280

FIG. 30

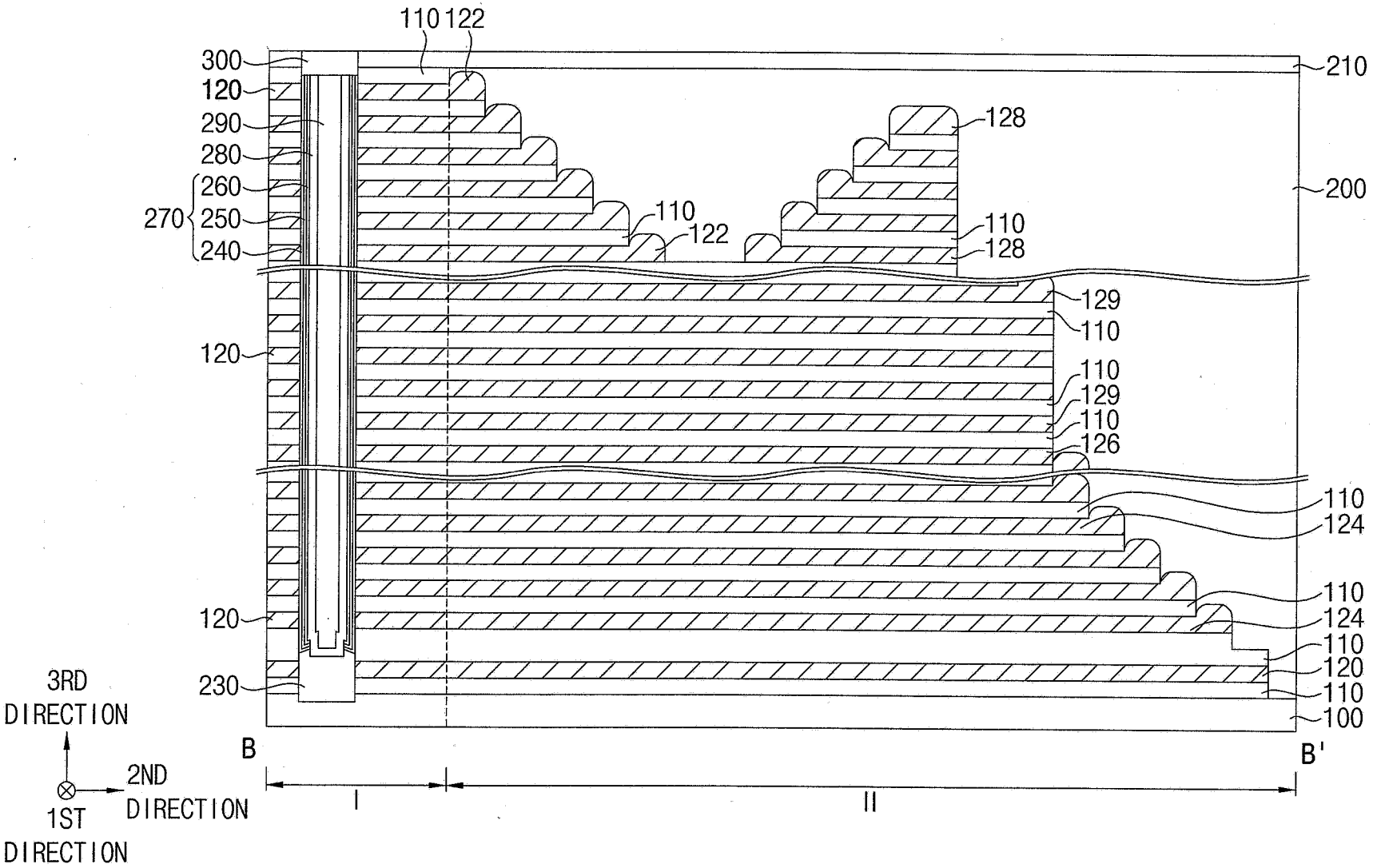
110
122
300
120
290
280
260
270
250
240
210
200
128
110
122
110
128
129
110
120
110
129
110
126
110
124
110
124
110
120
110
100
230
B
B'
I
II
3RD DIRECTION
2ND DIRECTION
1ST DIRECTION

FIG. 31

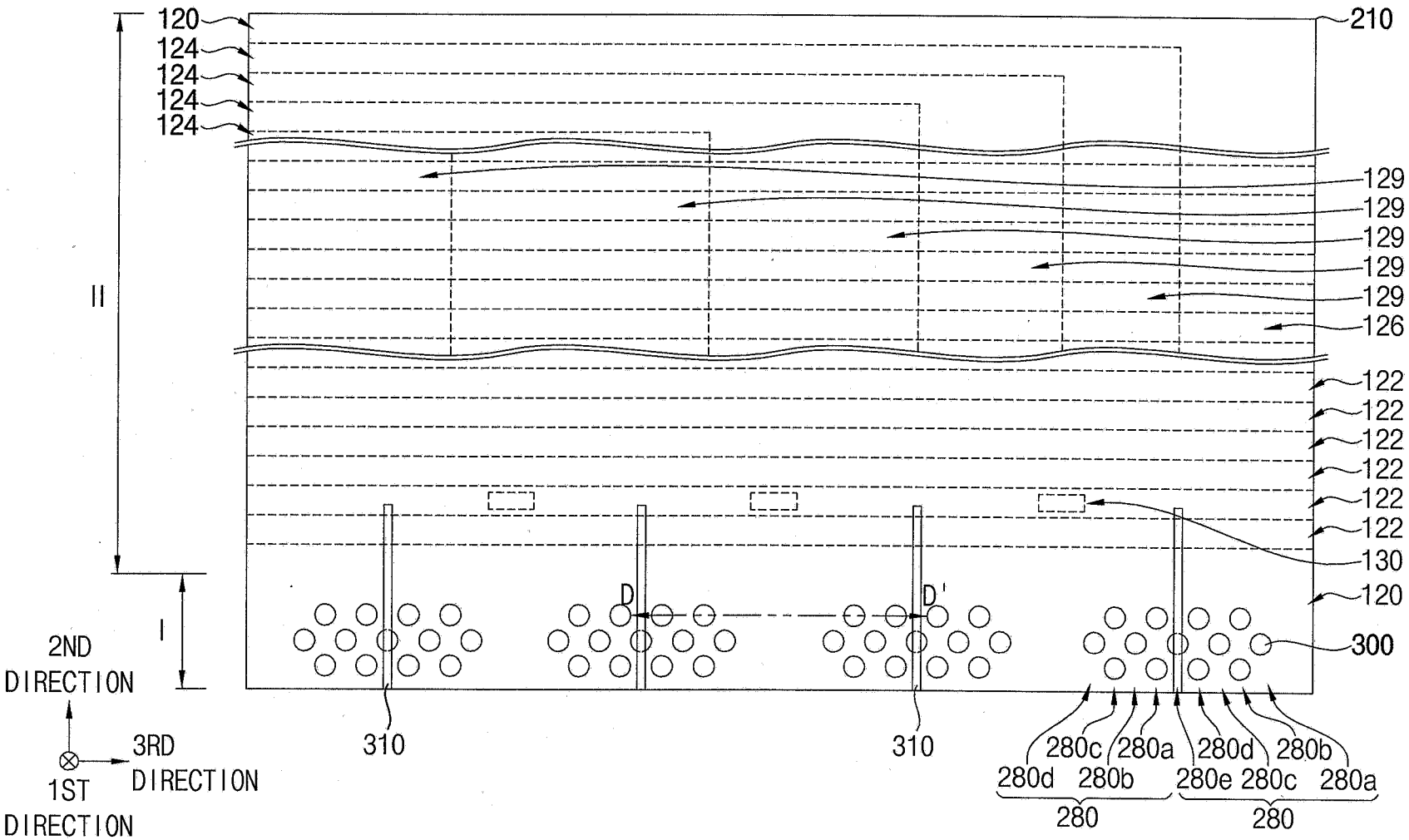
120
124
124
124
124
210
129
129
129
129
129
126
122
122
122
122
122
122
130
120
300
II
I
D
D'
310
310
280c
280a
280d
280b
280d
280b
280e
280c
280a
280
280
2ND DIRECTION
3RD DIRECTION
1ST DIRECTION

FIG. 32

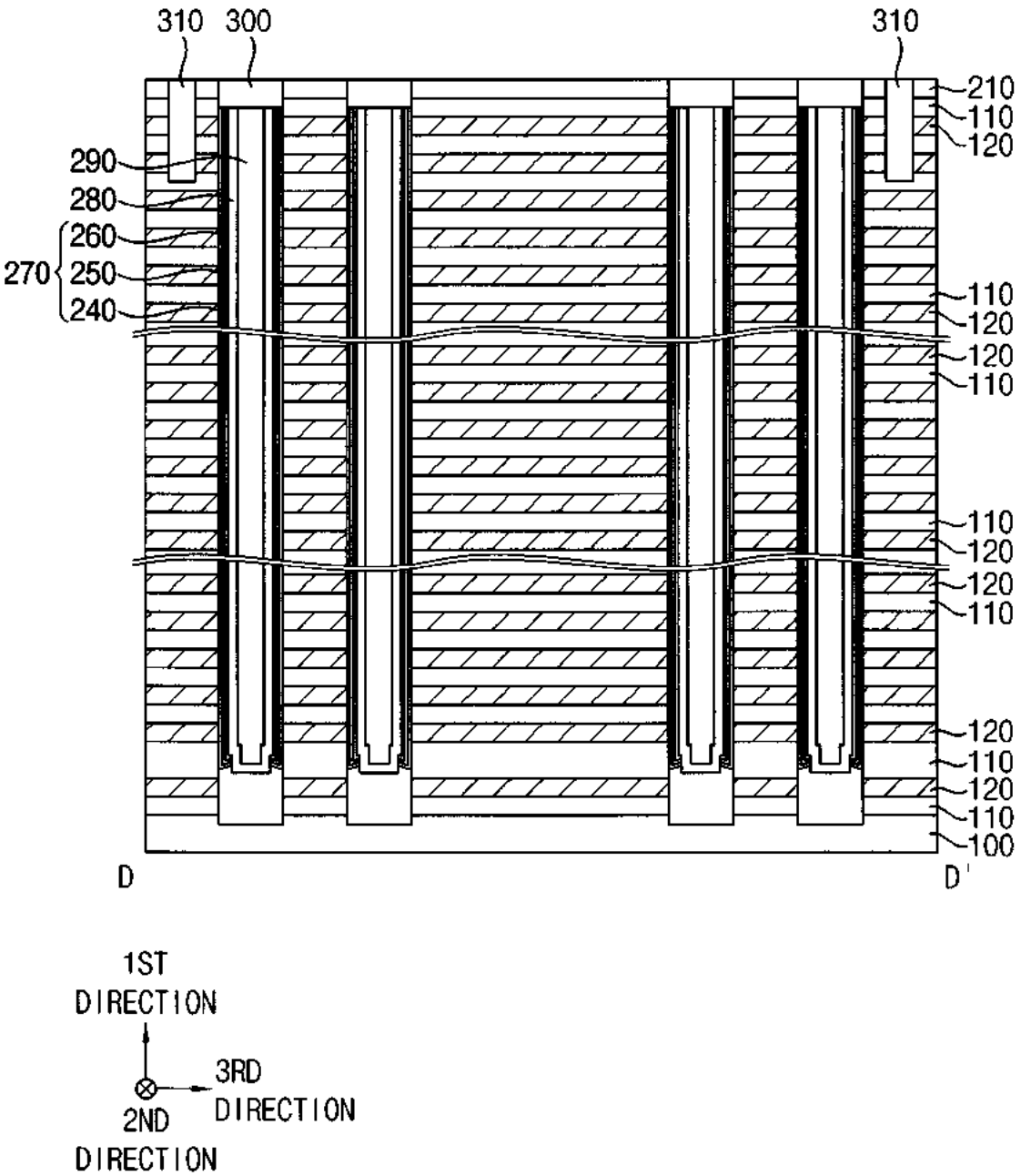
310
300
310
210
110
120
290
280
260
270
250
240
110
120
120
110
110
120
120
110
120
110
120
110
100
D
D'
1ST
DIRECTION
3RD
DIRECTION
2ND
DIRECTION

FIG. 33

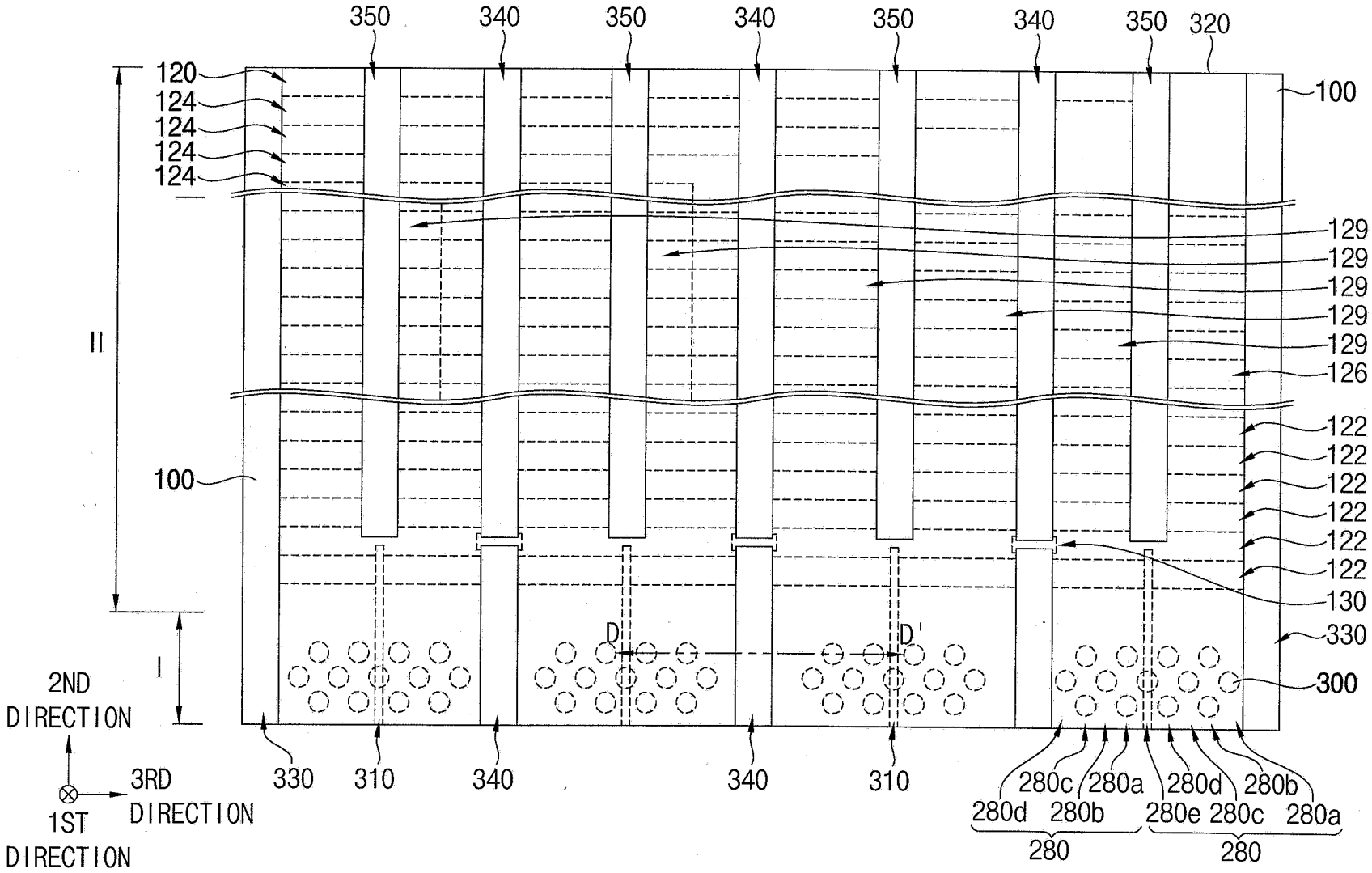
350
340
350
340
350
340
350
320
120
124
124
124
124
100
129
129
129
129
129
126
II
100
122
122
122
122
122
122
130
330
D
D'
I
300
2ND DIRECTION
3RD DIRECTION
1ST DIRECTION
330
310
340
340
310
280c
280a
280d
280b
280d
280b
280e
280c
280a
280
280

FIG. 34

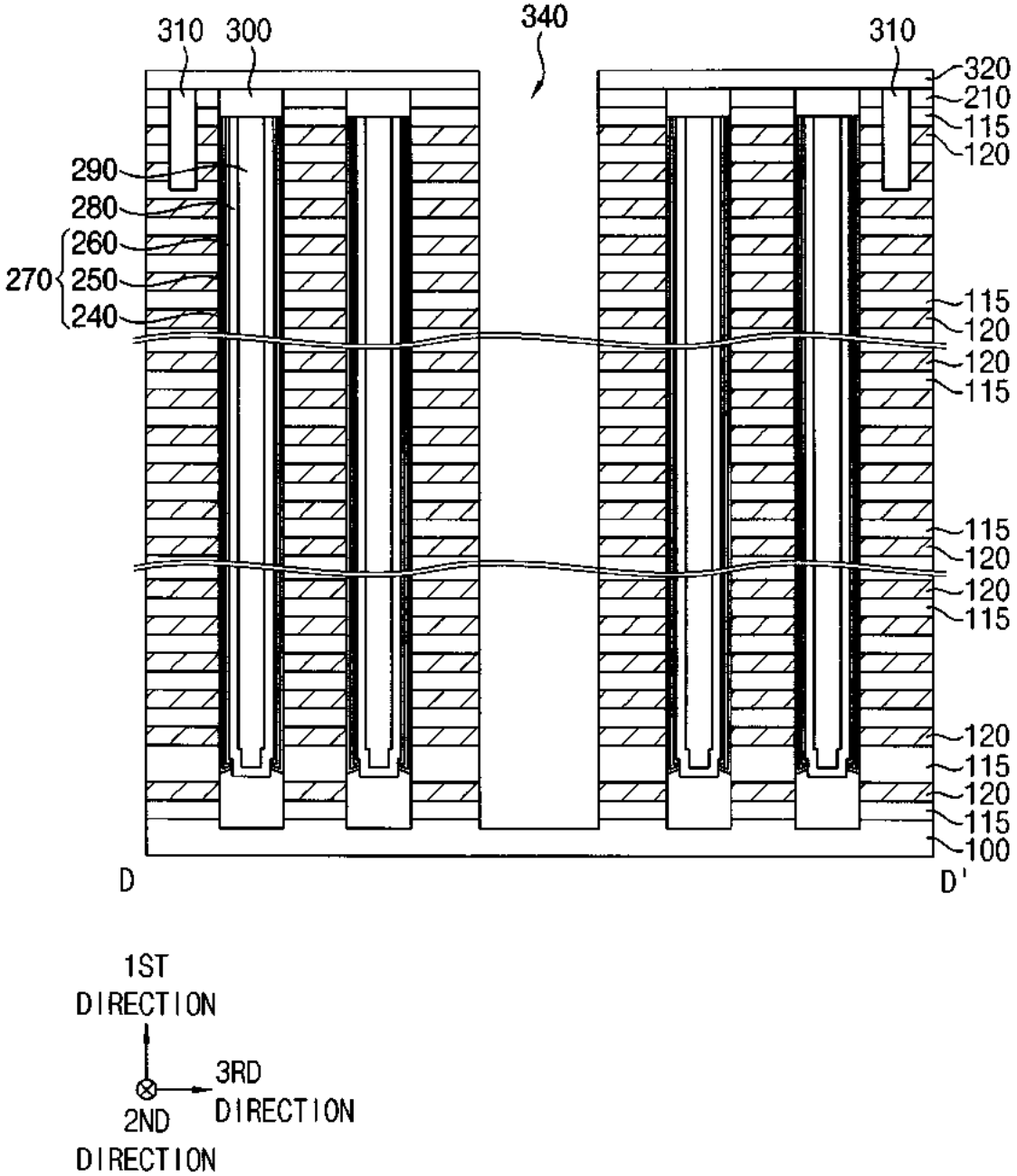
310
300
340
310
320
210
115
120
290
280
260
270
250
240
115
120
120
115
115
120
120
115
120
115
120
115
100
D
D'
1ST
DIRECTION
3RD
DIRECTION
2ND
DIRECTION

FIG. 35

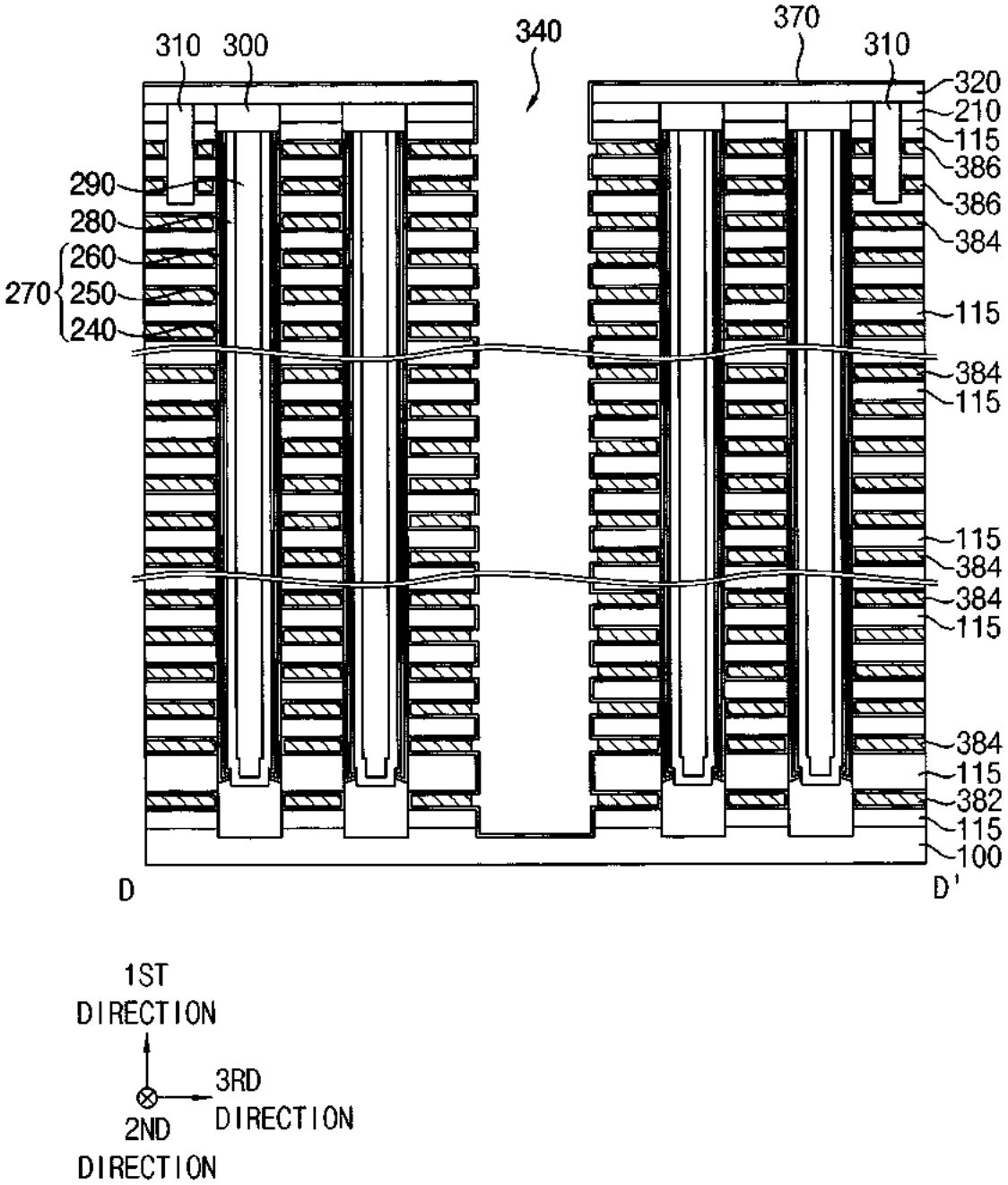
310
300
340
370
310
320
210
115
386
386
384
290
280
260
270
250
240
115
384
115
115
384
384
115
384
115
382
115
100
D
D'
1ST
DIRECTION
3RD
DIRECTION
2ND
DIRECTION

FIG. 36

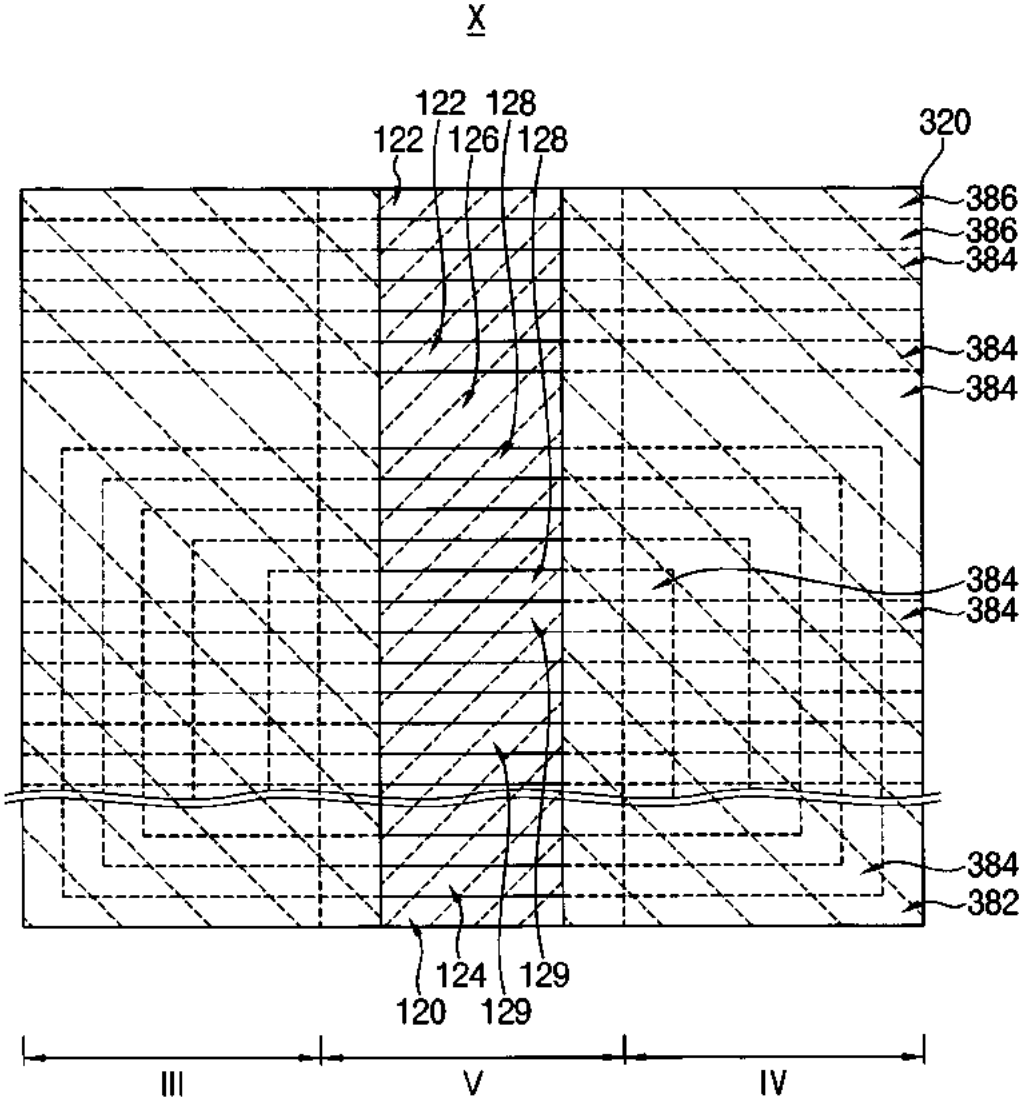
X
122
122
126
128
128
320
386
386
384
384
384
384
384
384
382
124
129
120
129
III
V
IV

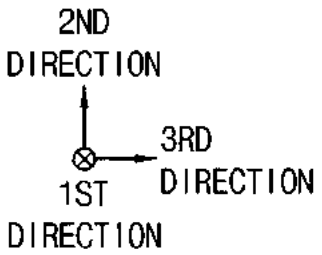
2ND
DIRECTION
3RD
DIRECTION
1ST
DIRECTION

FIG. 37

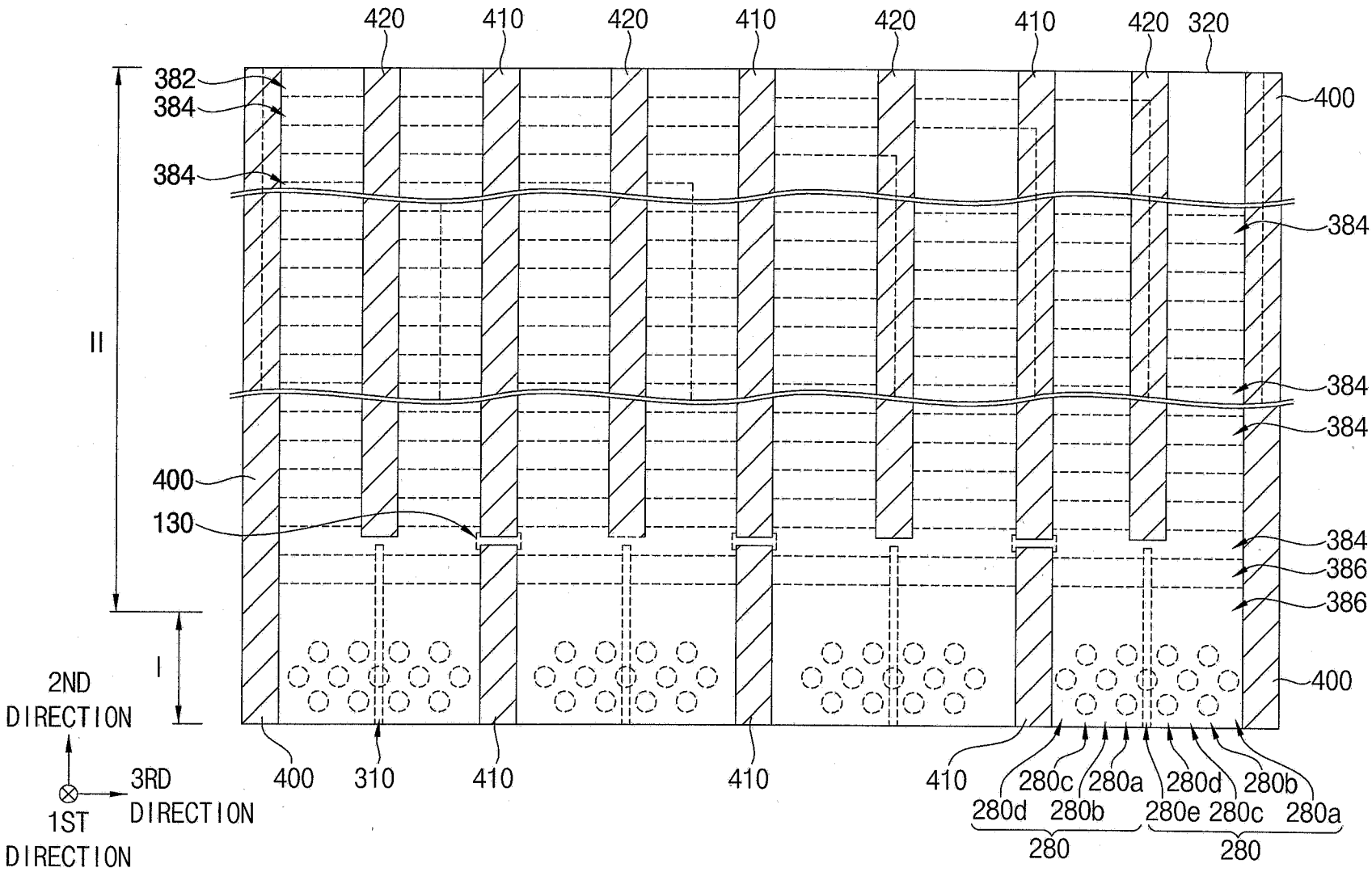

420
410
420
410
420
410
420
320
382
384
384
400
384
384
384
384
386
386
400
II
I
400
130
2ND DIRECTION
3RD DIRECTION
1ST DIRECTION
400
310
410
410
410
280c
280a
280d
280b
280d
280b
280e
280c
280a
280
280

FIG. 38

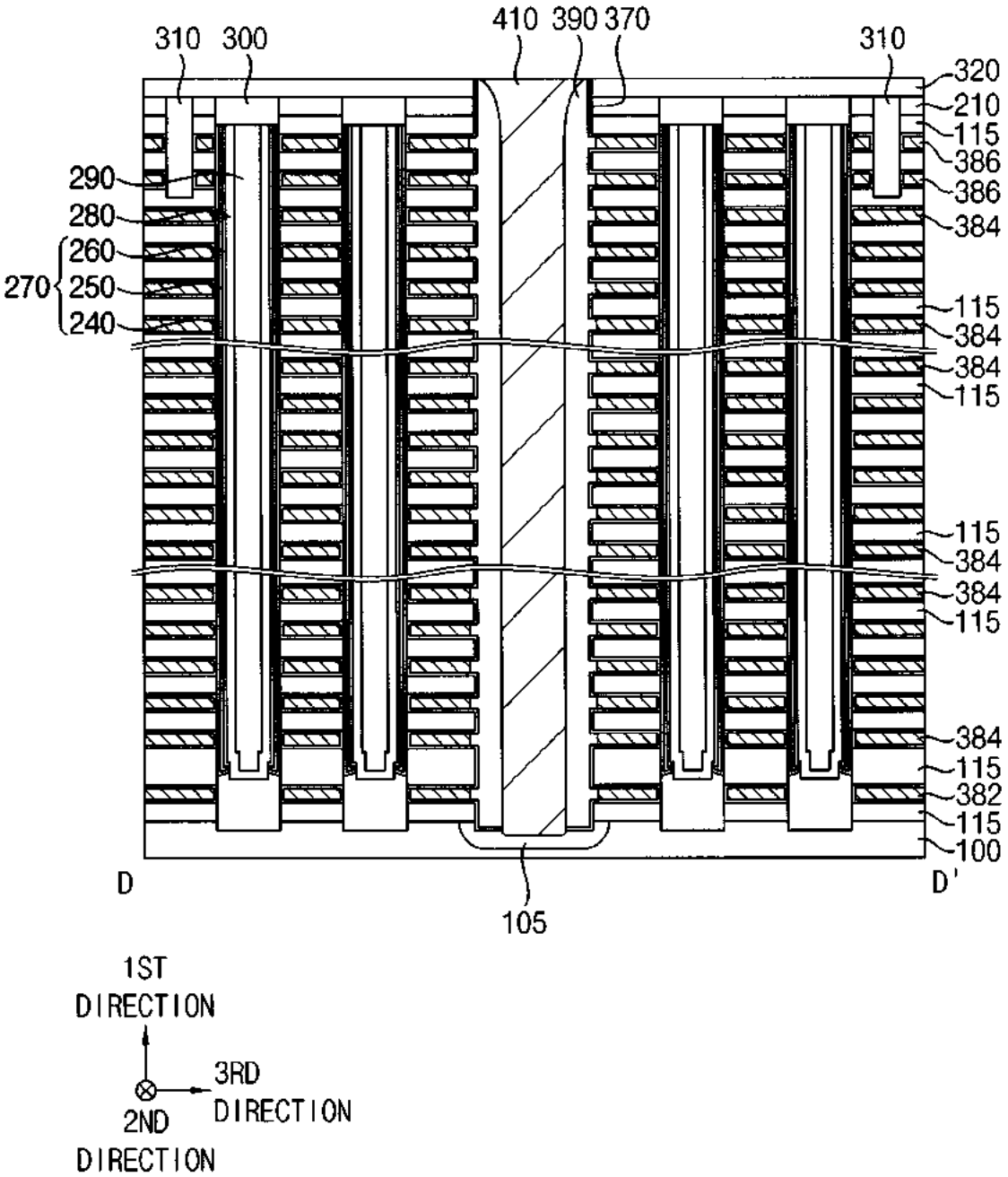
310
300
410
390
370
310
320
210
115
386
386
384
290
280
260
270
250
240
115
384
384
115
115
384
384
115
384
115
382
115
100
D
D'
105
1ST DIRECTION
3RD DIRECTION
2ND DIRECTION

FIG. 39

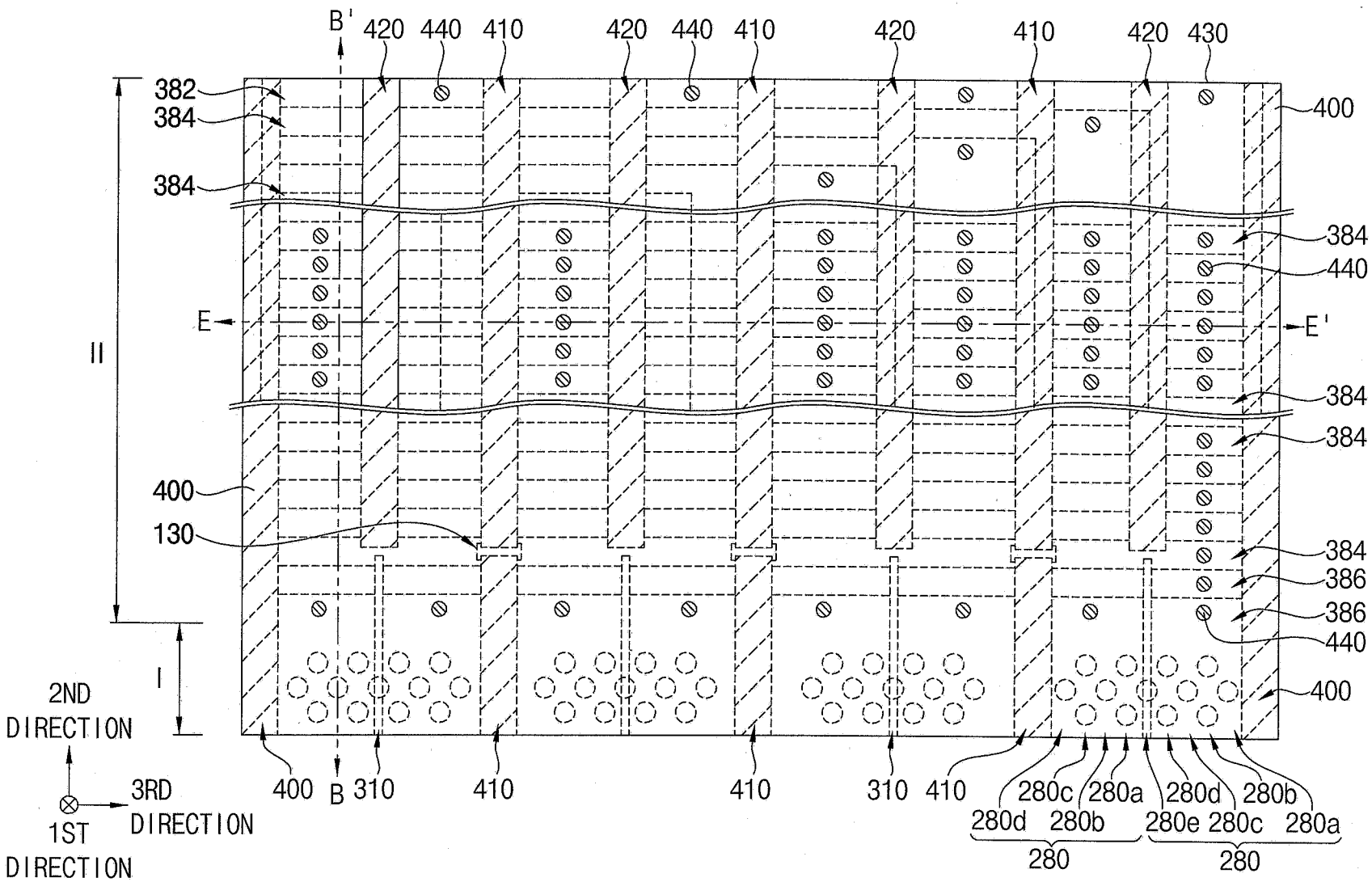
B'
420
440
410
420
440
410
420
410
420
430
382
384
384
400
384
440
E
E'
II
384
384
400
130
384
386
386
440
I
400
2ND DIRECTION
3RD DIRECTION
1ST DIRECTION
400
B
310
410
410
310
410
280c
280a
280d
280b
280d
280b
280e
280c
280a
280
280

FIG. 40

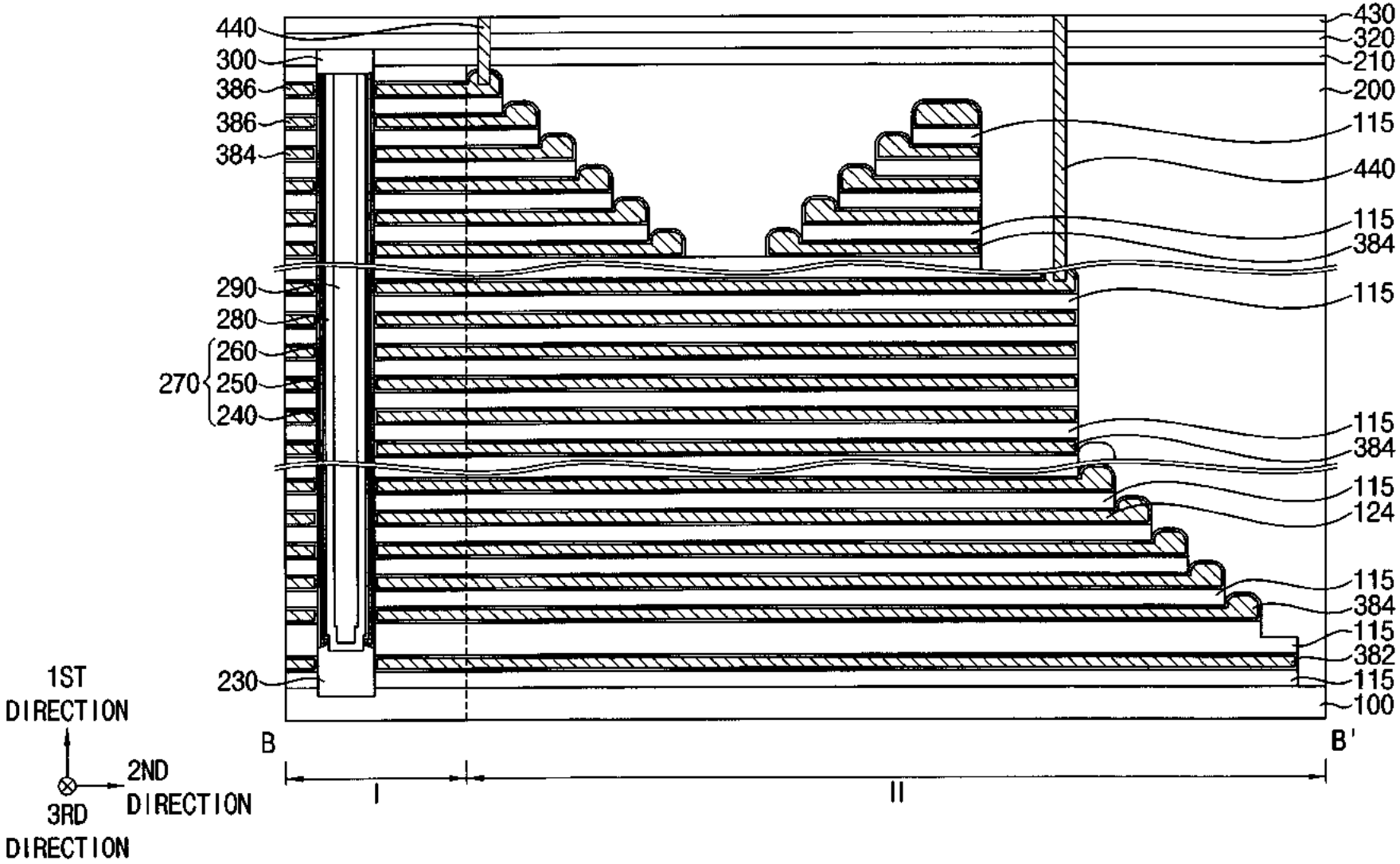
440
300
386
386
384
290
280
260
270
250
240
230
430
320
210
200
115
440
115
384
115
115
384
115
124
115
384
115
382
115
100
B
B'
I
II
1ST DIRECTION
2ND DIRECTION
3RD DIRECTION

FIG. 41

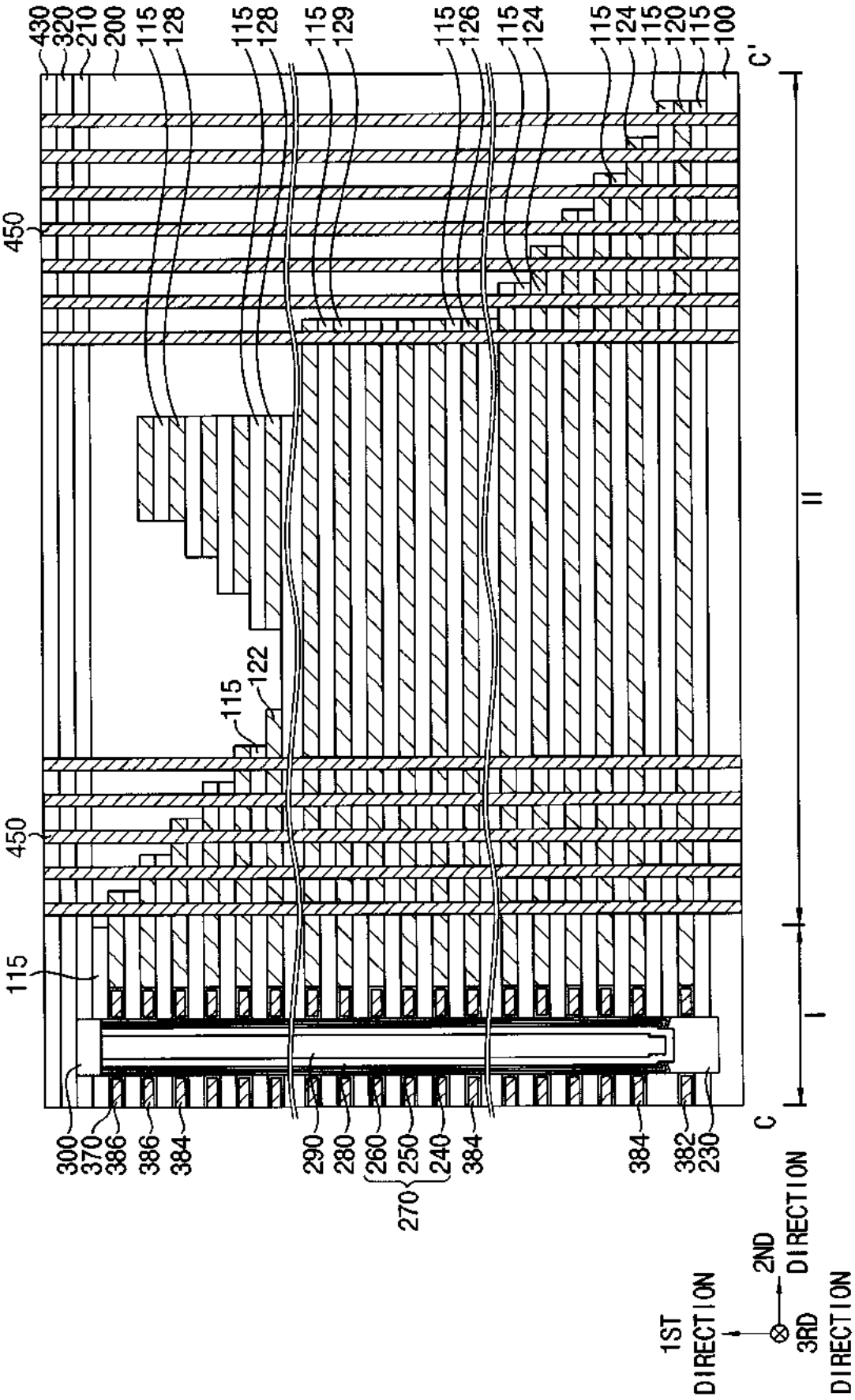
430
320
210
200
115
128
115
128
115
129
115
126
115
124
115
124
115
120
115
100
C'
450
450
115
122
115
II
I
300
370
386
386
384
290
280
260
250
240
384
384
382
230
C
270
1ST DIRECTION
2ND DIRECTION
3RD DIRECTION

FIG. 42

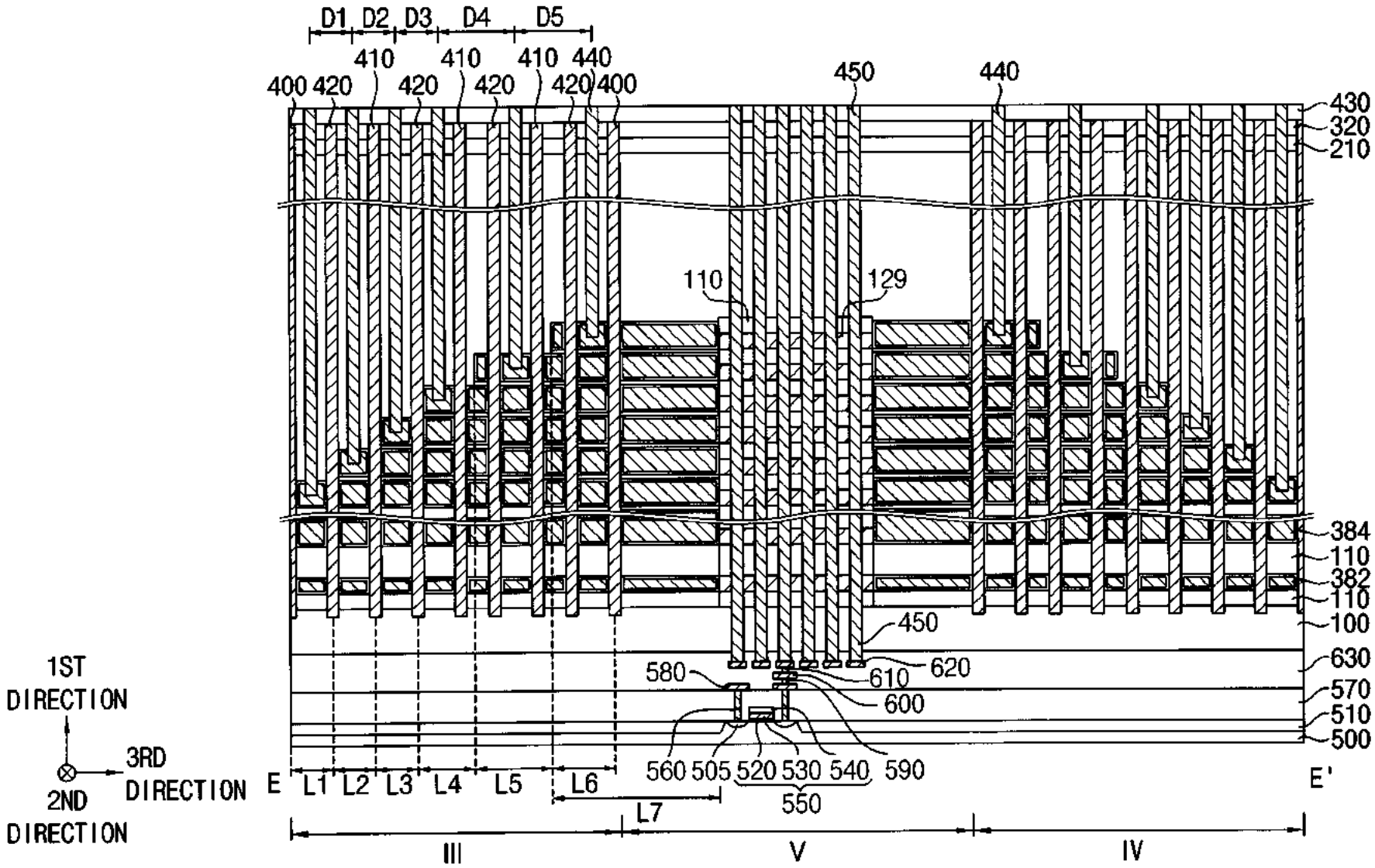
D1
D2
D3
D4
D5
400
420
410
420
410
420
410
420
440
400
450
440
430
320
210
110
129
384
110
382
110
100
450
630
580
610
620
600
570
510
500
560
505
520
530
540
590
550
E
E'
L1
L2
L3
L4
L5
L6
L7
III
V
IV
1ST DIRECTION
2ND DIRECTION
3RD DIRECTION

FIG. 43

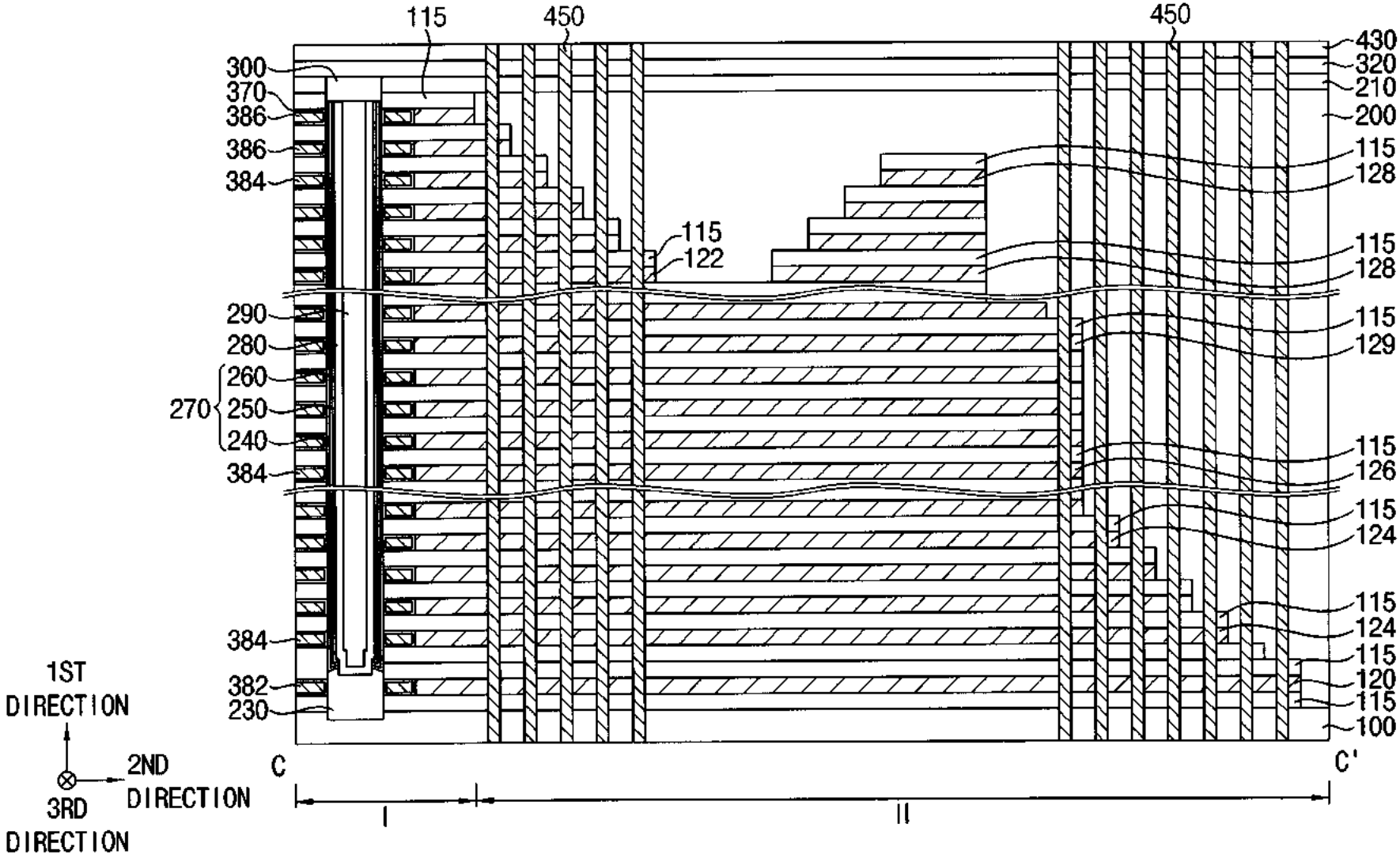
115
450
450
300
370
386
386
384
115
122
290
280
260
270
250
240
384
384
382
230
430
320
210
200
115
128
115
128
115
129
115
126
115
124
115
124
115
120
115
100
C
C'
I
II
1ST DIRECTION
2ND DIRECTION
3RD DIRECTION

FIG. 44

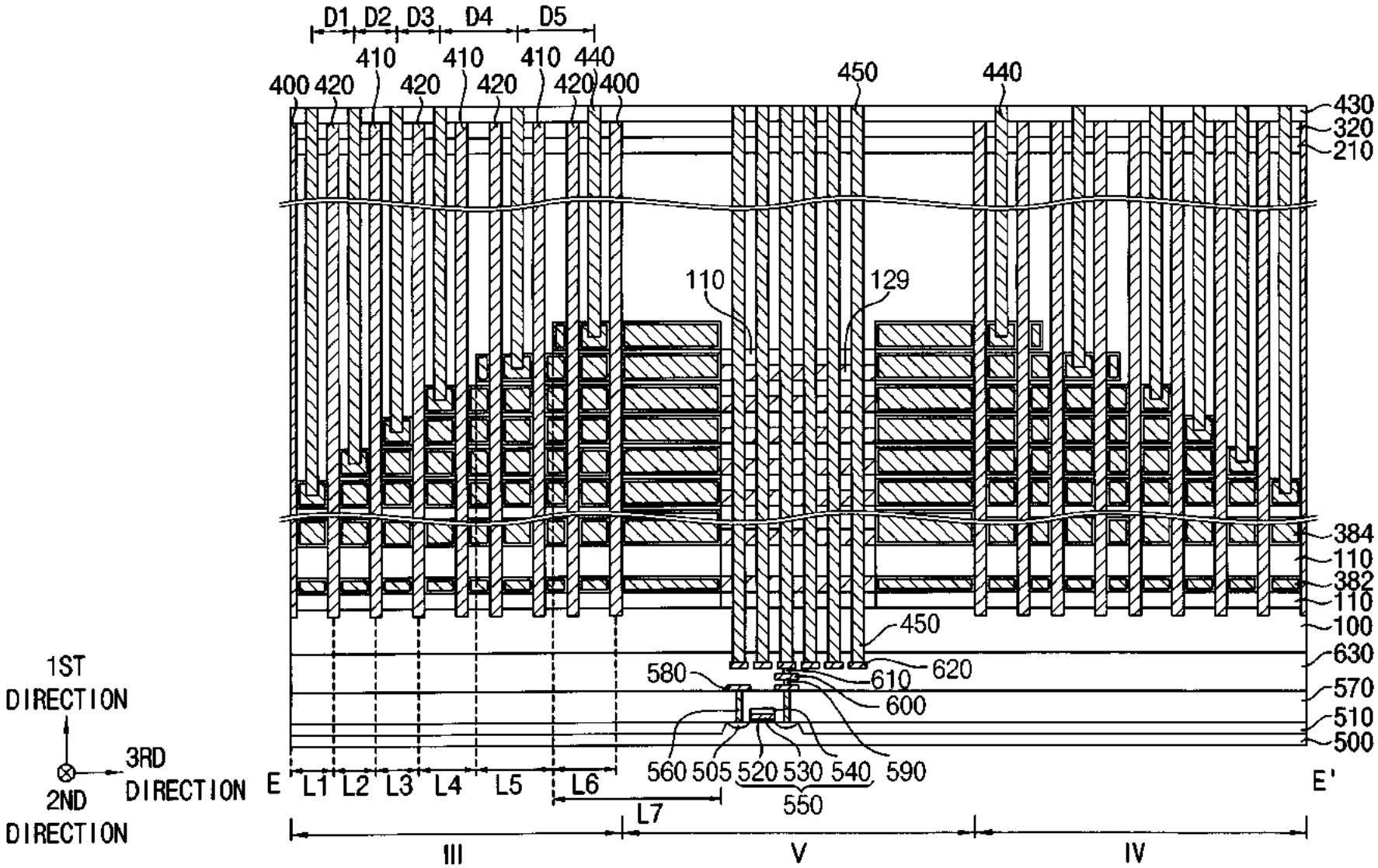
D1
D2
D3
D4
D5
400
420
410
420
410
420
410
420
440
400
450
440
430
320
210
110
129
384
110
382
110
100
450
630
620
610
580
600
570
510
500
560
505
520
530
540
590
550
E
E'
L1
L2
L3
L4
L5
L6
L7
III
V
IV
1ST DIRECTION
2ND DIRECTION
3RD DIRECTION

FIG. 45

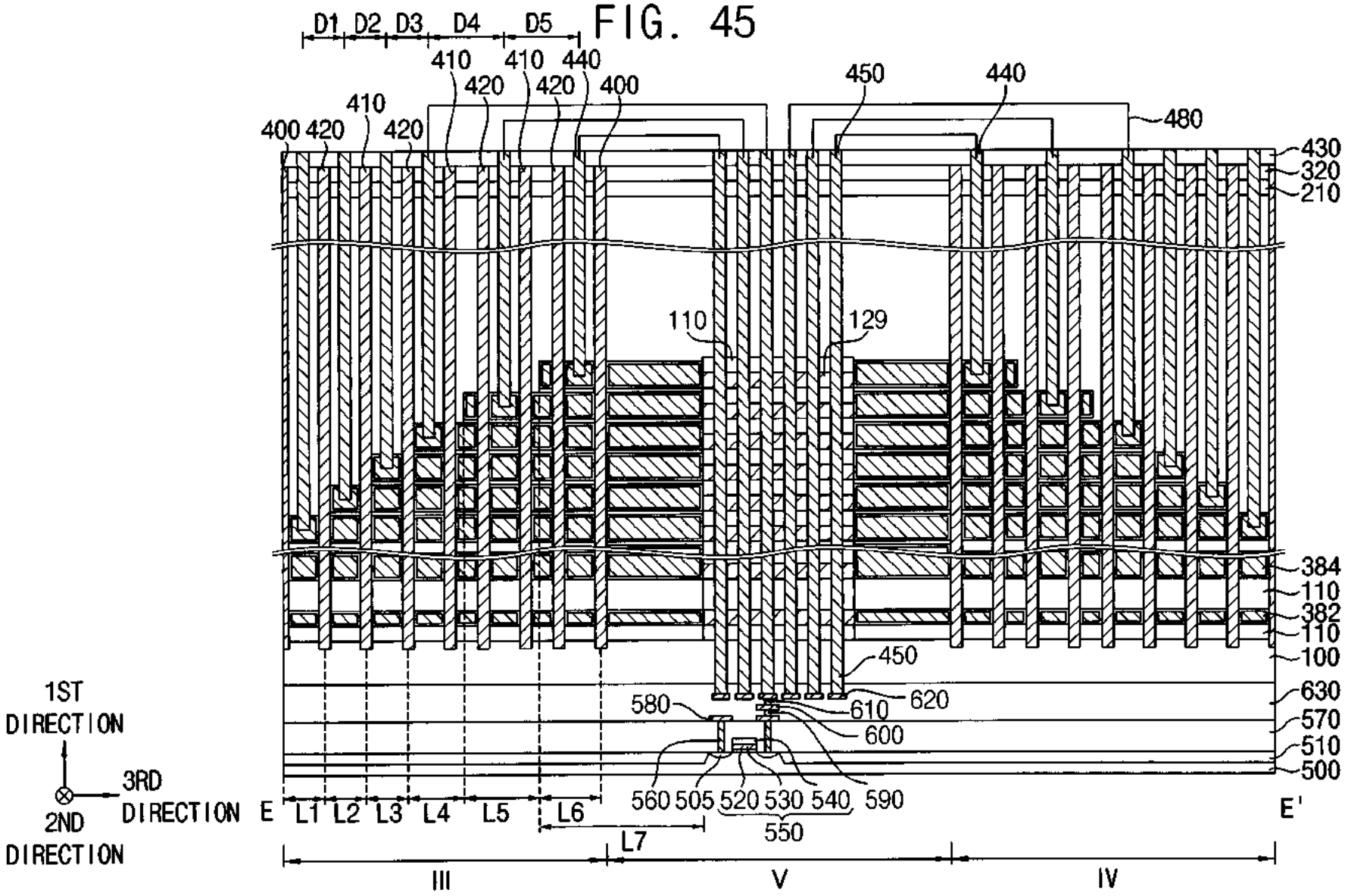
D1
D2
D3
D4
D5
410
420
400
440
450
480
430
320
210
110
129
384
382
100
630
570
510
500
580
610
620
600
560
505
520
530
540
590
550
1ST DIRECTION
2ND DIRECTION
3RD DIRECTION
E
E'
L1
L2
L3
L4
L5
L6
L7
III
V
IV