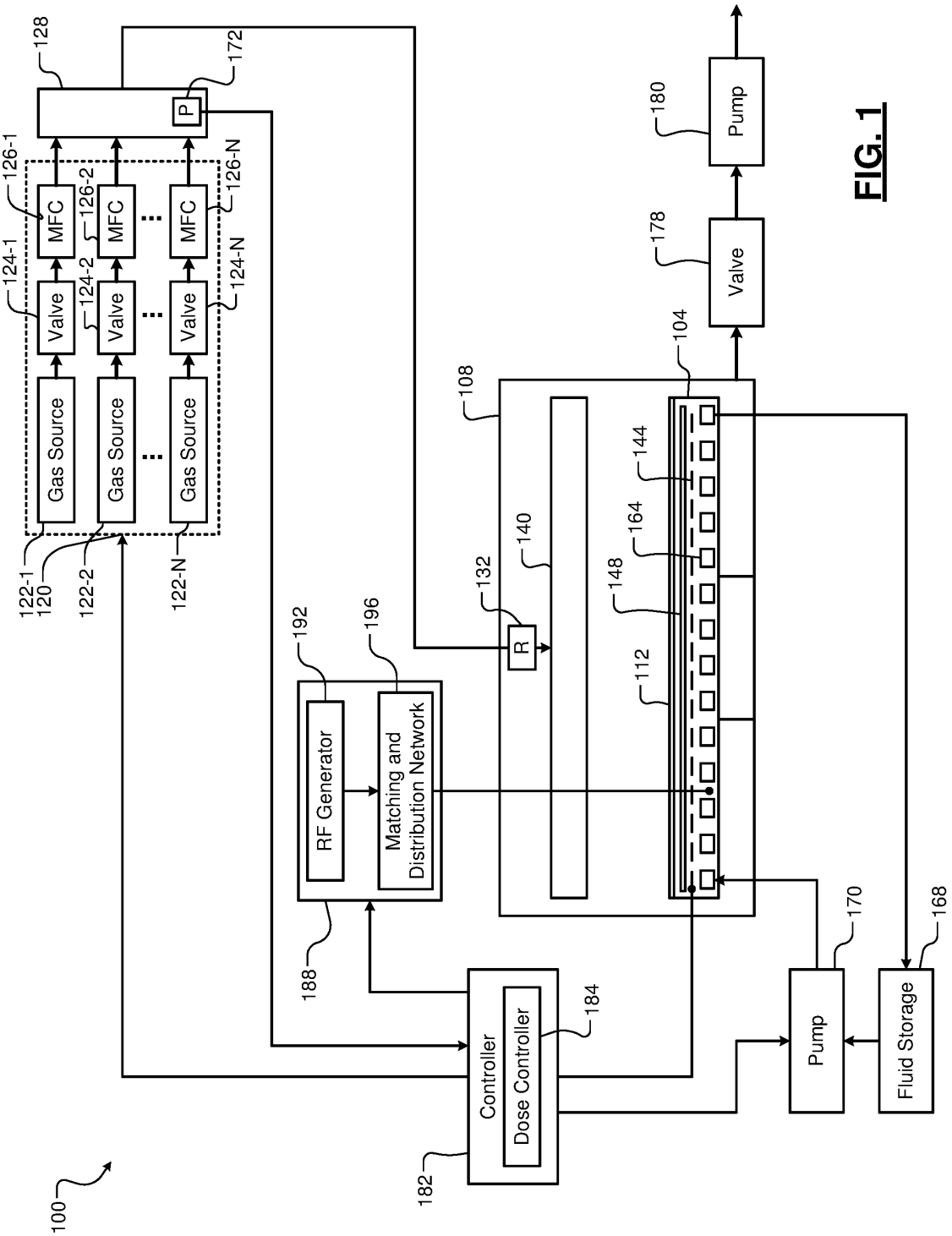
100
128
172
P
126-1
126-2
126-N
MFC
MFC
MFC
124-1
124-2
124-N
Valve
Valve
Valve
Gas Source
Gas Source
Gas Source
122-1
120
122-2
122-N
192
196
RF Generator
Matching and Distribution Network
188
182
Controller
Dose Controller
184
132
R
140
108
104
144
164
148
112
180
Pump
178
Valve
170
Pump
168
Fluid Storage

FIG. 1

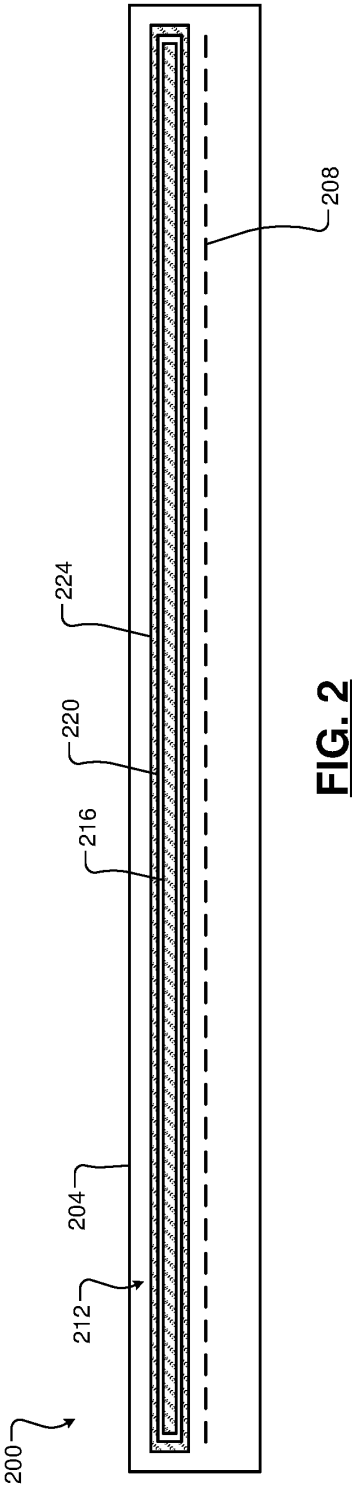

FIG. 2

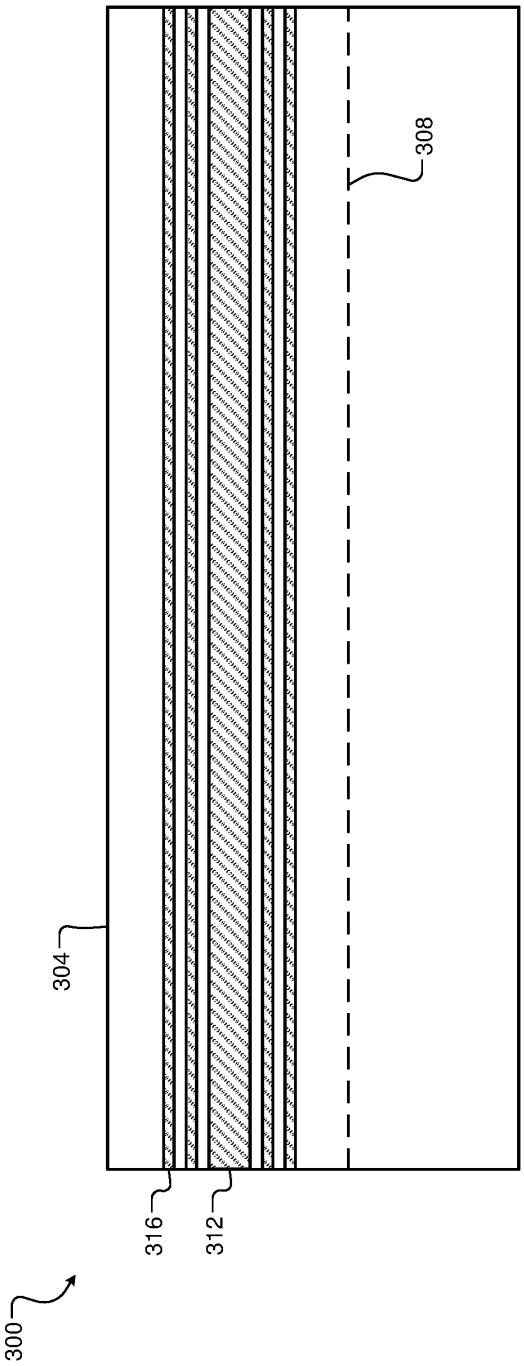

FIG. 3

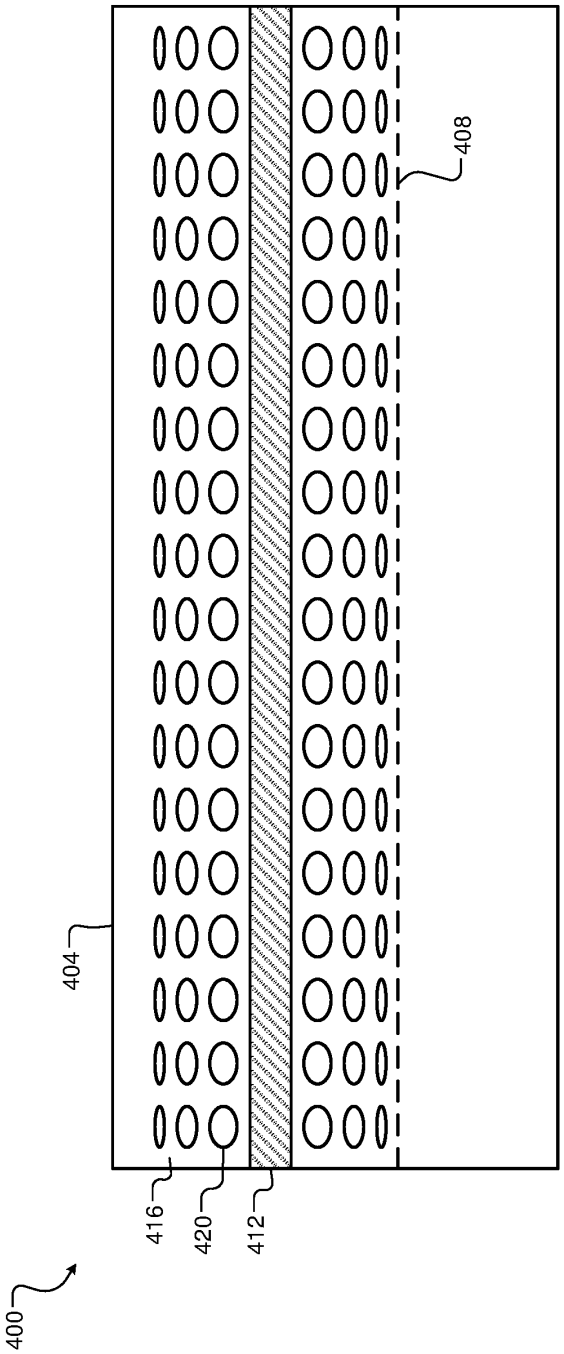

FIG. 4

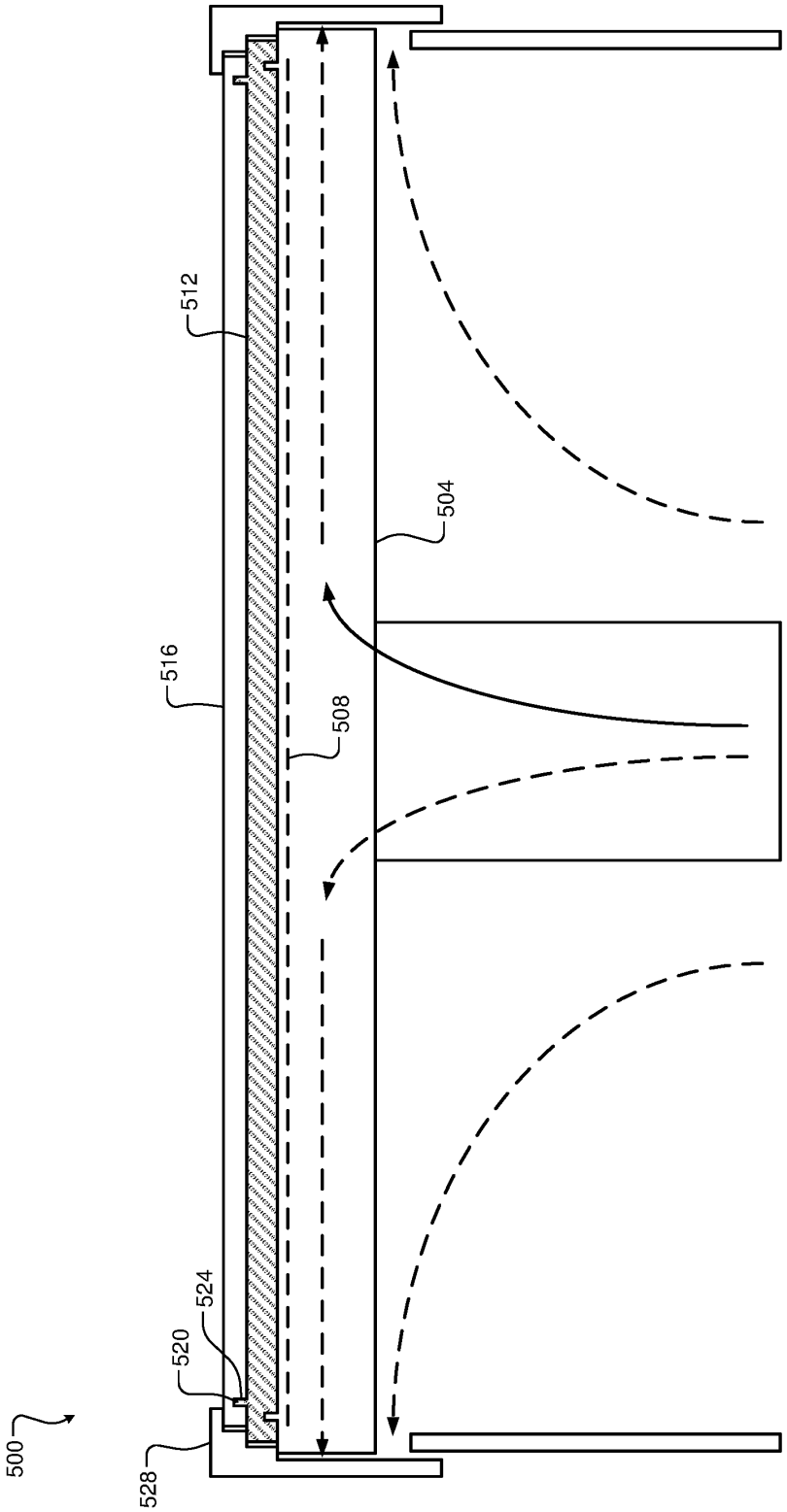

FIG. 5

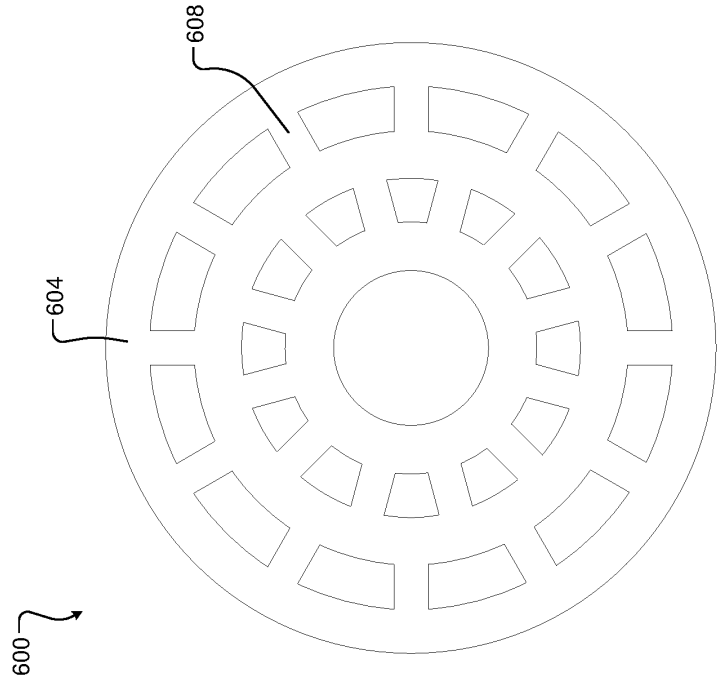

FIG. 6B

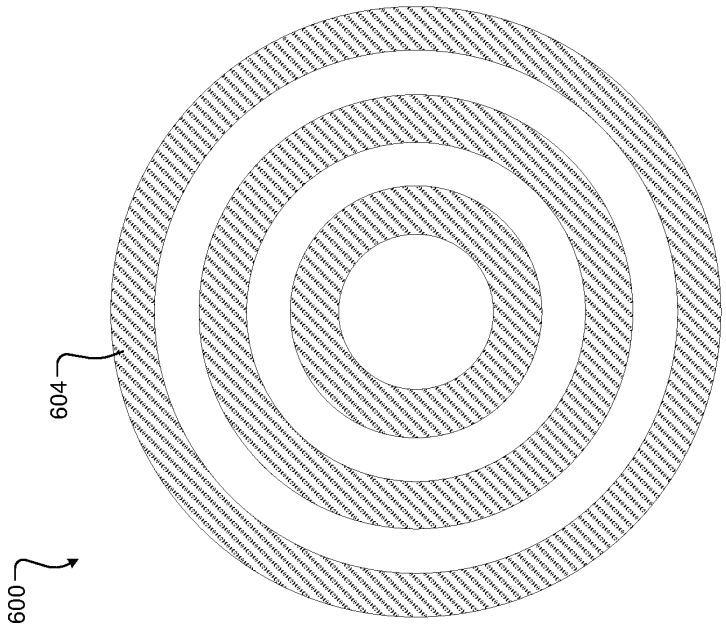

FIG. 6A