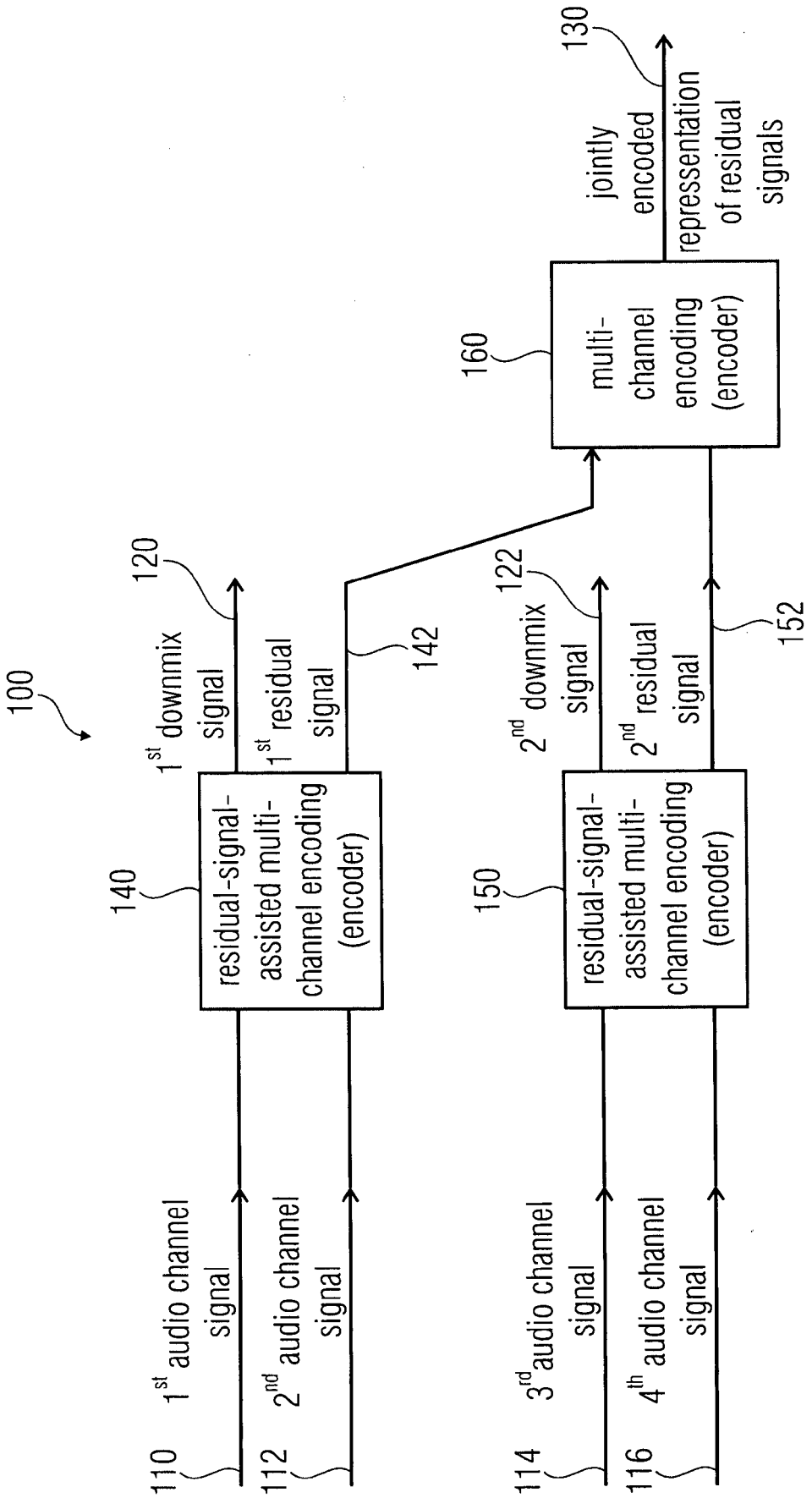
100
110
1st audio channel signal
112
2nd audio channel signal
114
3rd audio channel signal
116
4th audio channel signal
140
residual-signal-assisted multi-channel encoding (encoder)
150
residual-signal-assisted multi-channel encoding (encoder)
160
multi-channel encoding (encoder)
120
1st downmix signal
122
2nd downmix signal
142
1st residual signal
152
2nd residual signal
130
jointly encoded representation of residual signals

FIG 1

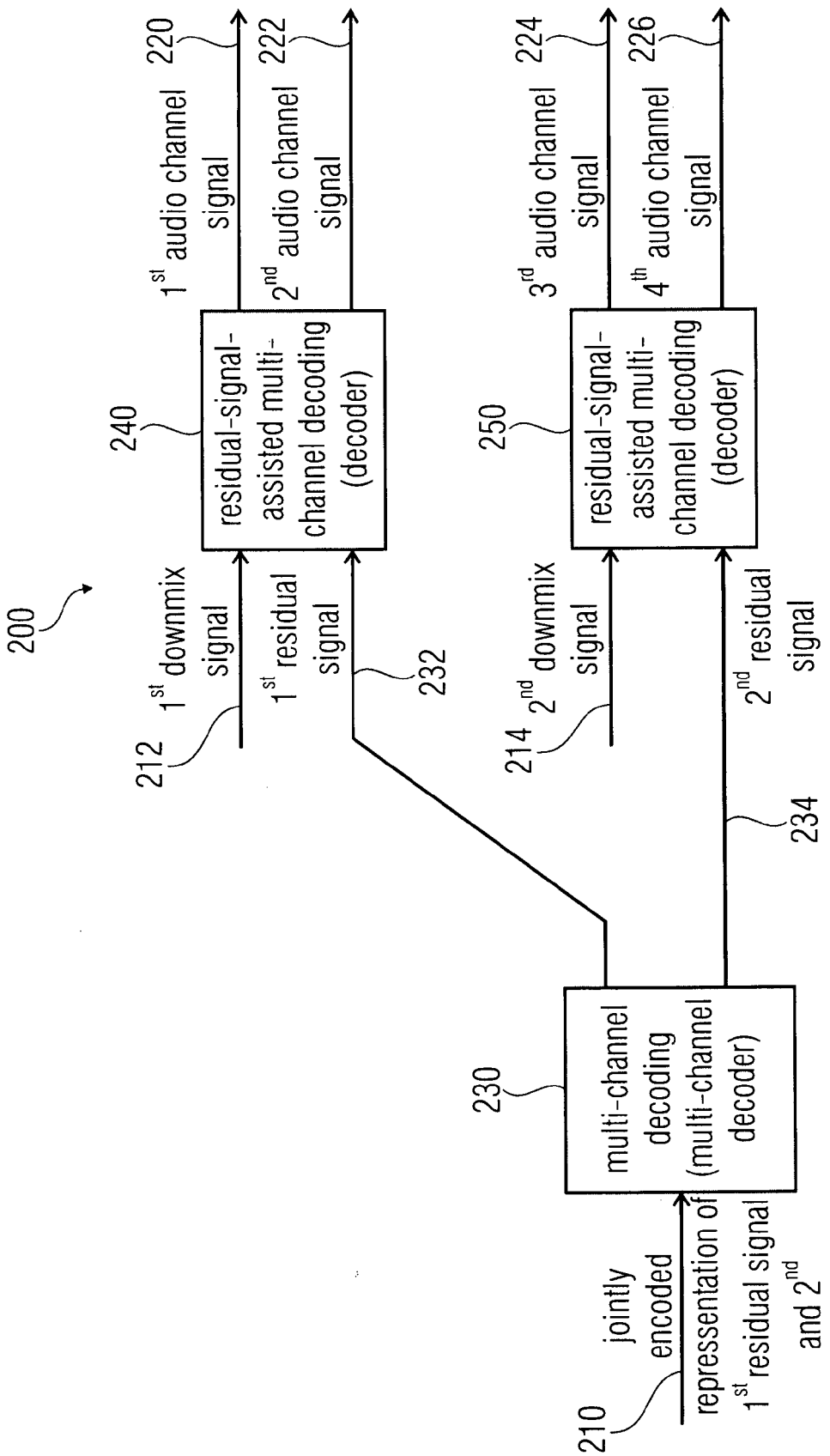
200
210
jointly encoded representation of 1st residual signal and 2nd residual signal
230
multi-channel decoding (multi-channel decoder)
212
1st downmix signal
214
2nd downmix signal
232
1st residual signal
234
2nd residual signal
240
residual-signal-assisted multi-channel decoding (decoder)
250
residual-signal-assisted multi-channel decoding (decoder)
220
1st audio channel signal
222
2nd audio channel signal
224
3rd audio channel signal
226
4th audio channel signal

FIG 2

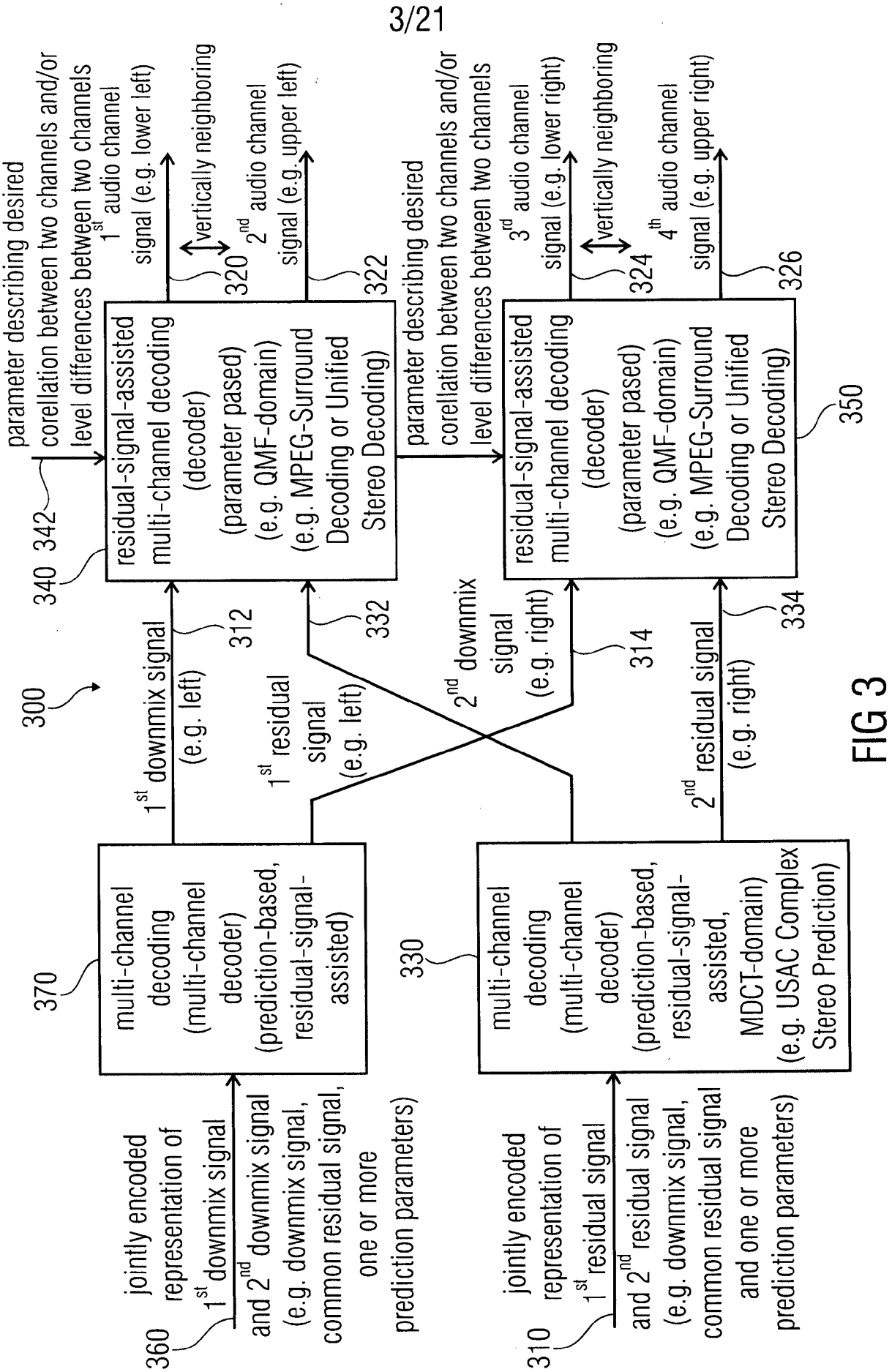
jointly encoded representation of 1st downmix signal and 2nd downmix signal (e.g. downmix signal, common residual signal, one or more prediction parameters)
360
multi-channel decoding (multi-channel decoder) (prediction-based, residual-signal-assisted)
370
1st downmix signal (e.g. left)
312
1st residual signal (e.g. left)
332
2nd downmix signal (e.g. right)
314
2nd residual signal (e.g. right)
334
jointly encoded representation of 1st residual signal and 2nd residual signal (e.g. downmix signal, common residual signal and one or more prediction parameters)
310
multi-channel decoding (multi-channel decoder) (prediction-based, residual-signal-assisted, MDCT-domain) (e.g. USAC Complex Stereo Prediction)
330
300
parameter describing desired corellation between two channels and/or level differences between two channels
340
342
residual-signal-assisted multi-channel decoding (decoder) (parameter pased) (e.g. QMF-domain) (e.g. MPEG-Surround Decoding or Unified Stereo Decoding)
1st audio channel signal (e.g. lower left)
vertically neighboring
320
2nd audio channel signal (e.g. upper left)
322
parameter describing desired corellation between two channels and/or level differences between two channels
residual-signal-assisted multi-channel decoding (decoder) (parameter pased) (e.g. QMF-domain) (e.g. MPEG-Surround Decoding or Unified Stereo Decoding)
350
3rd audio channel signal (e.g. lower right)
vertically neighboring
324
4th audio channel signal (e.g. upper right)
326

FIG 3

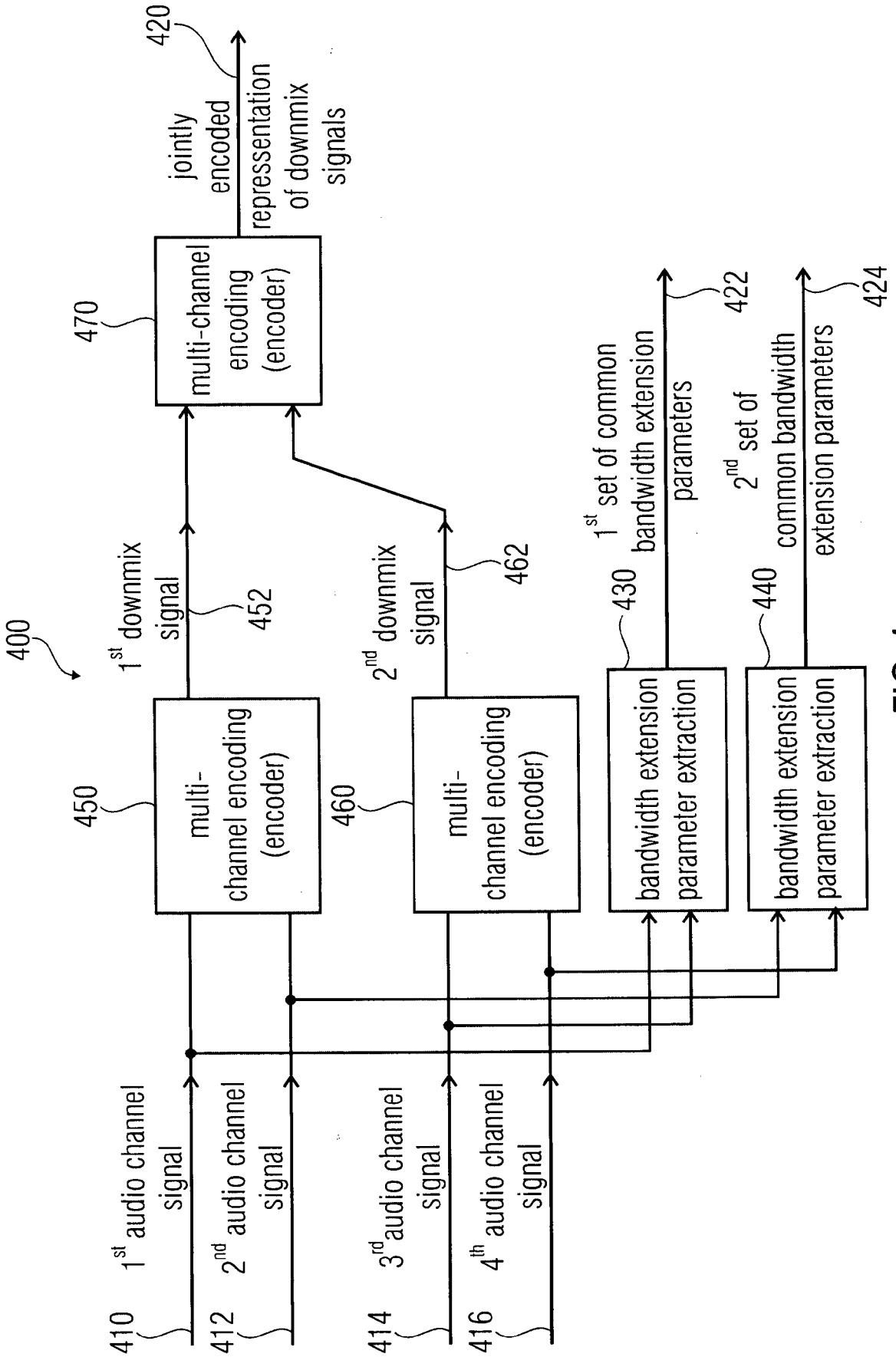
400
410
1st audio channel signal
412
2nd audio channel signal
414
3rd audio channel signal
416
4th audio channel signal
450
multi-channel encoding (encoder)
460
multi-channel encoding (encoder)
1st downmix signal
452
2nd downmix signal
462
470
multi-channel encoding (encoder)
jointly encoded representation of downmix signals
420
430
bandwidth extension parameter extraction
1st set of common bandwidth extension parameters
422
440
bandwidth extension parameter extraction
2nd set of common bandwidth extension parameters
424

FIG 4

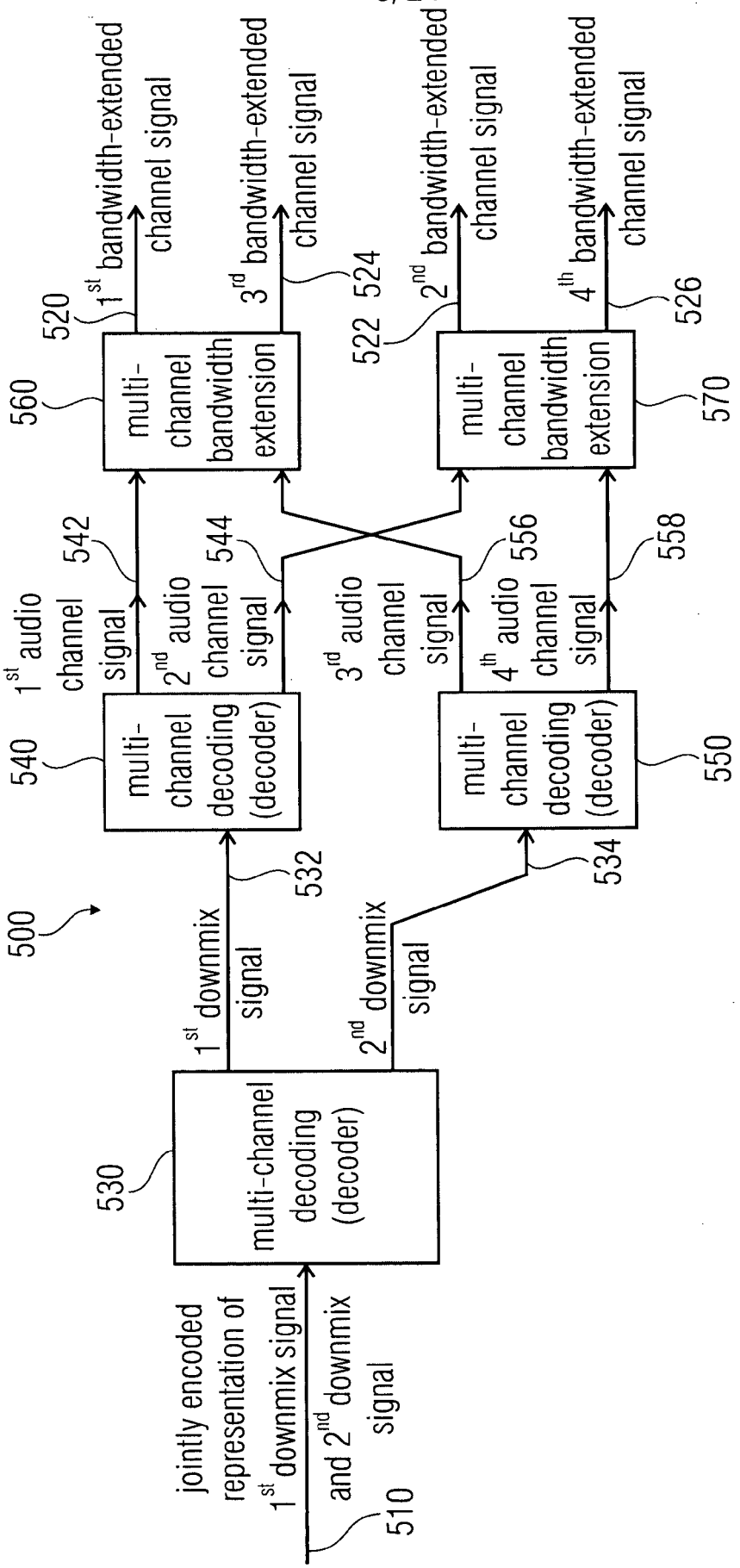
500
jointly encoded representation of 1st downmix signal and 2nd downmix signal
510
multi-channel decoding (decoder)
530
1st downmix signal
2nd downmix signal
532
534
multi-channel decoding (decoder)
multi-channel decoding (decoder)
540
550
1st audio channel signal
2nd audio channel signal
3rd audio channel signal
4th audio channel signal
542
544
556
558
multi-channel bandwidth extension
multi-channel bandwidth extension
560
570
1st bandwidth-extended channel signal
3rd bandwidth-extended channel signal
2nd bandwidth-extended channel signal
4th bandwidth-extended channel signal
520
522
524
526

FIG 5

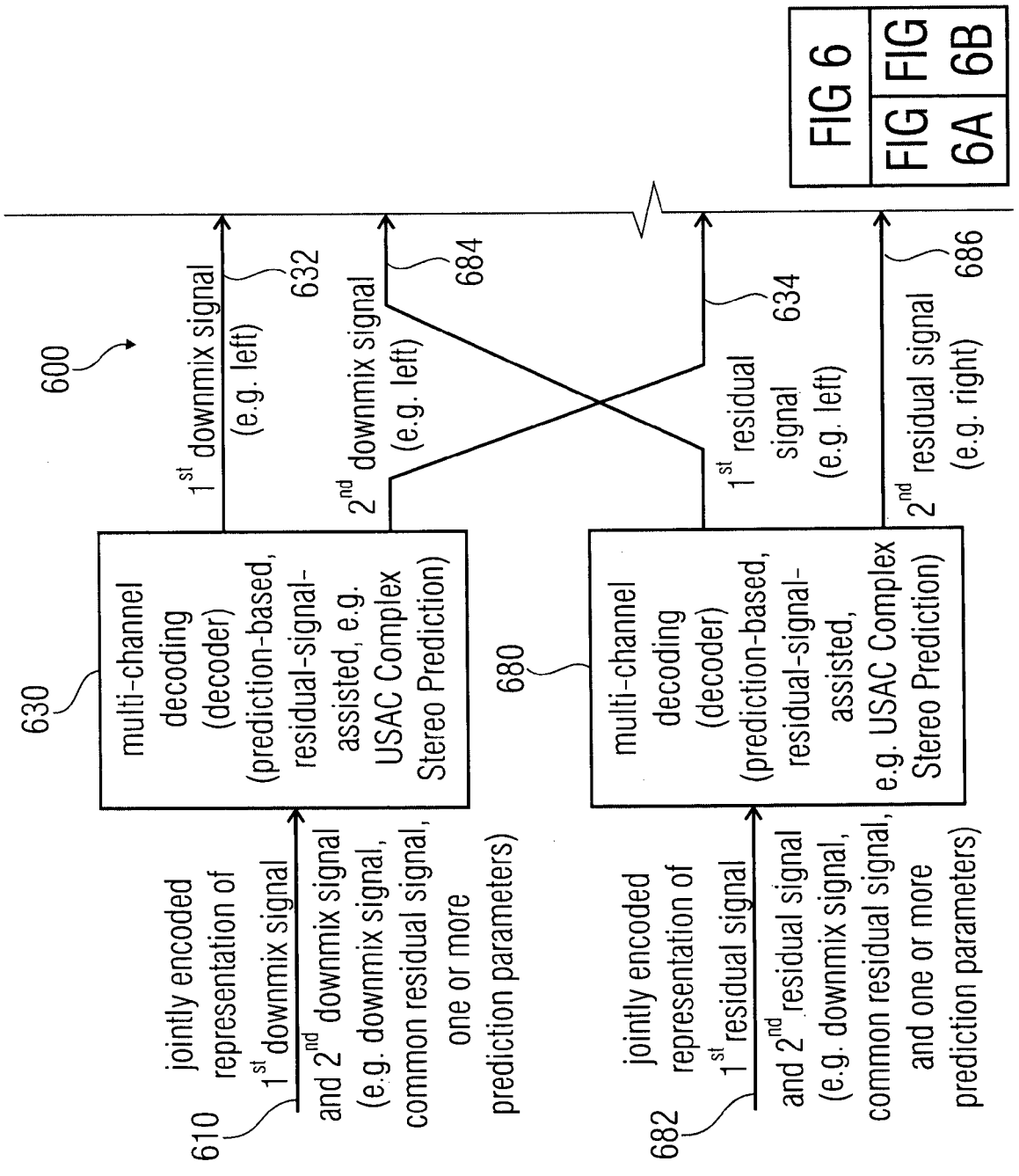
600
630
multi-channel decoding (decoder) (prediction-based, residual-signal-assisted, e.g. USAC Complex Stereo Prediction)
680
multi-channel decoding (decoder) (prediction-based, residual-signal-assisted, e.g. USAC Complex Stereo Prediction)
610
jointly encoded representation of 1st downmix signal and 2nd downmix signal (e.g. downmix signal, common residual signal, one or more prediction parameters)
682
jointly encoded representation of 1st residual signal and 2nd residual signal (e.g. downmix signal, common residual signal, and one or more prediction parameters)
1st downmix signal (e.g. left) 632
2nd downmix signal (e.g. left) 684
1st residual signal (e.g. left) 634
2nd residual signal (e.g. right) 686
FIG 6
FIG 6A
FIG 6B

FIG 6A

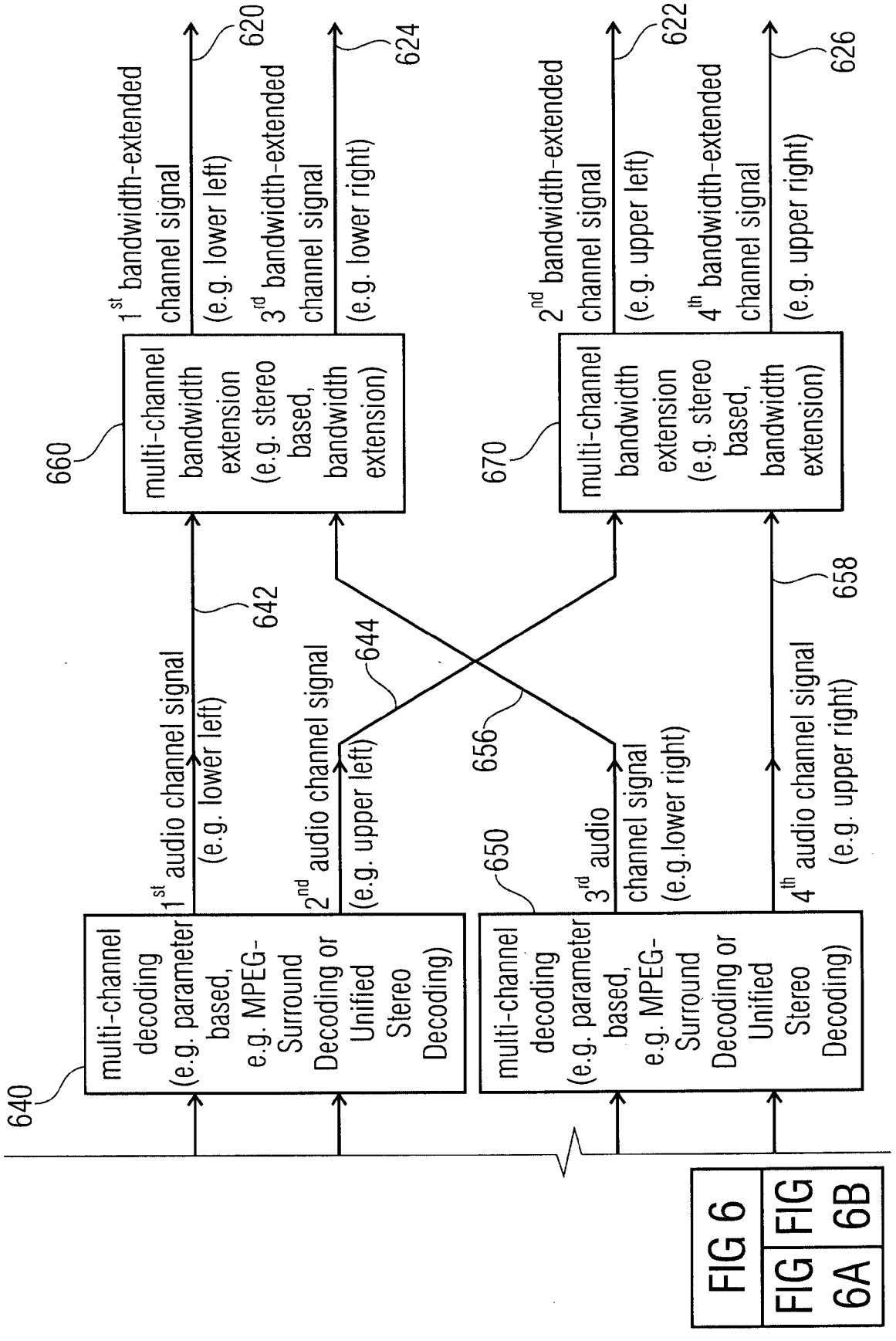

FIG 6B

FIG 6

FIG 6A	FIG 6B

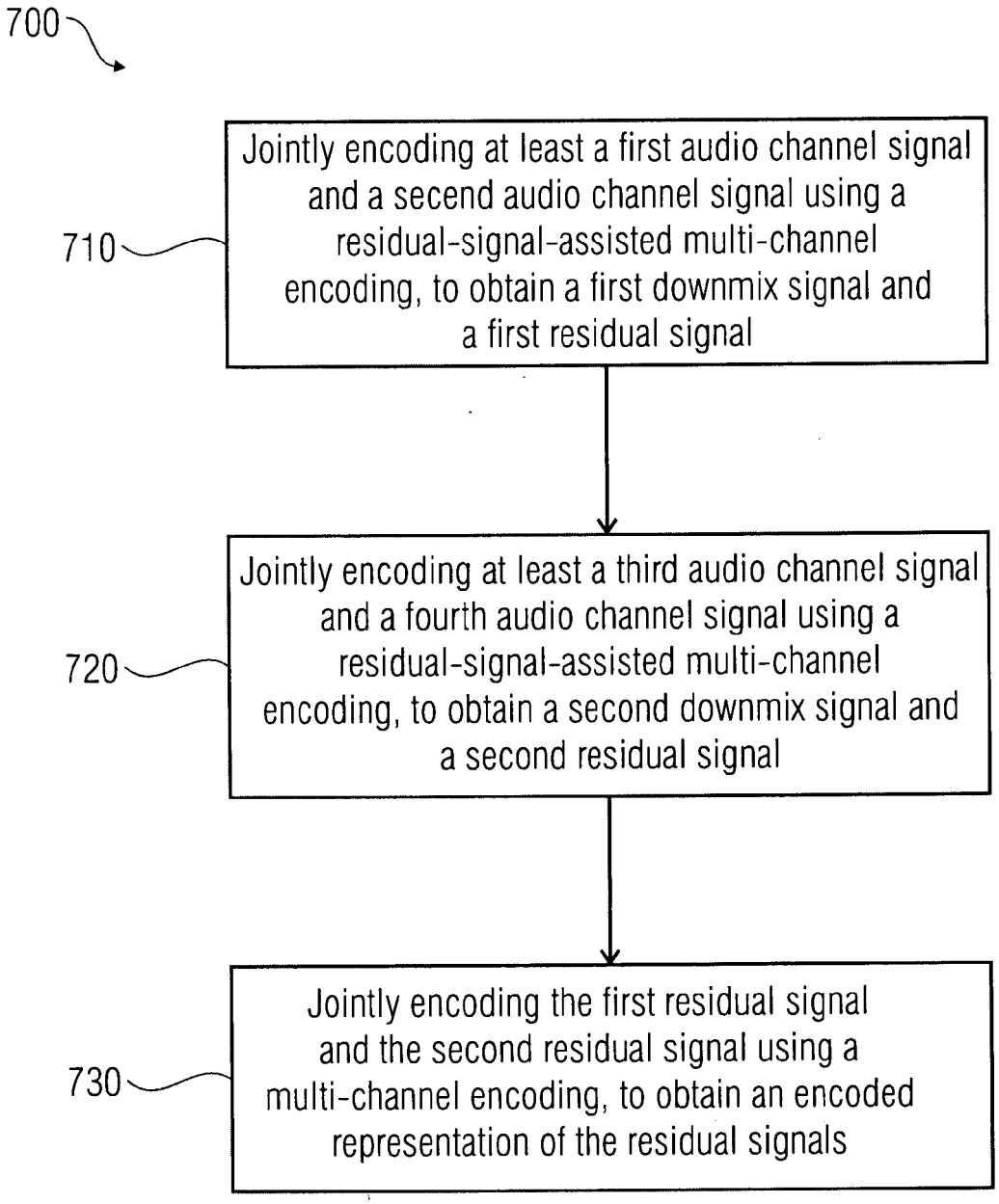
700
Jointly encoding at least a first audio channel signal and a secend audio channel signal using a residual-signal-assisted multi-channel encoding, to obtain a first downmix signal and a first residual signal
710
Jointly encoding at least a third audio channel signal and a fourth audio channel signal using a residual-signal-assisted multi-channel encoding, to obtain a second downmix signal and a second residual signal
720
Jointly encoding the first residual signal and the second residual signal using a multi-channel encoding, to obtain an encoded representation of the residual signals
730

FIG 7

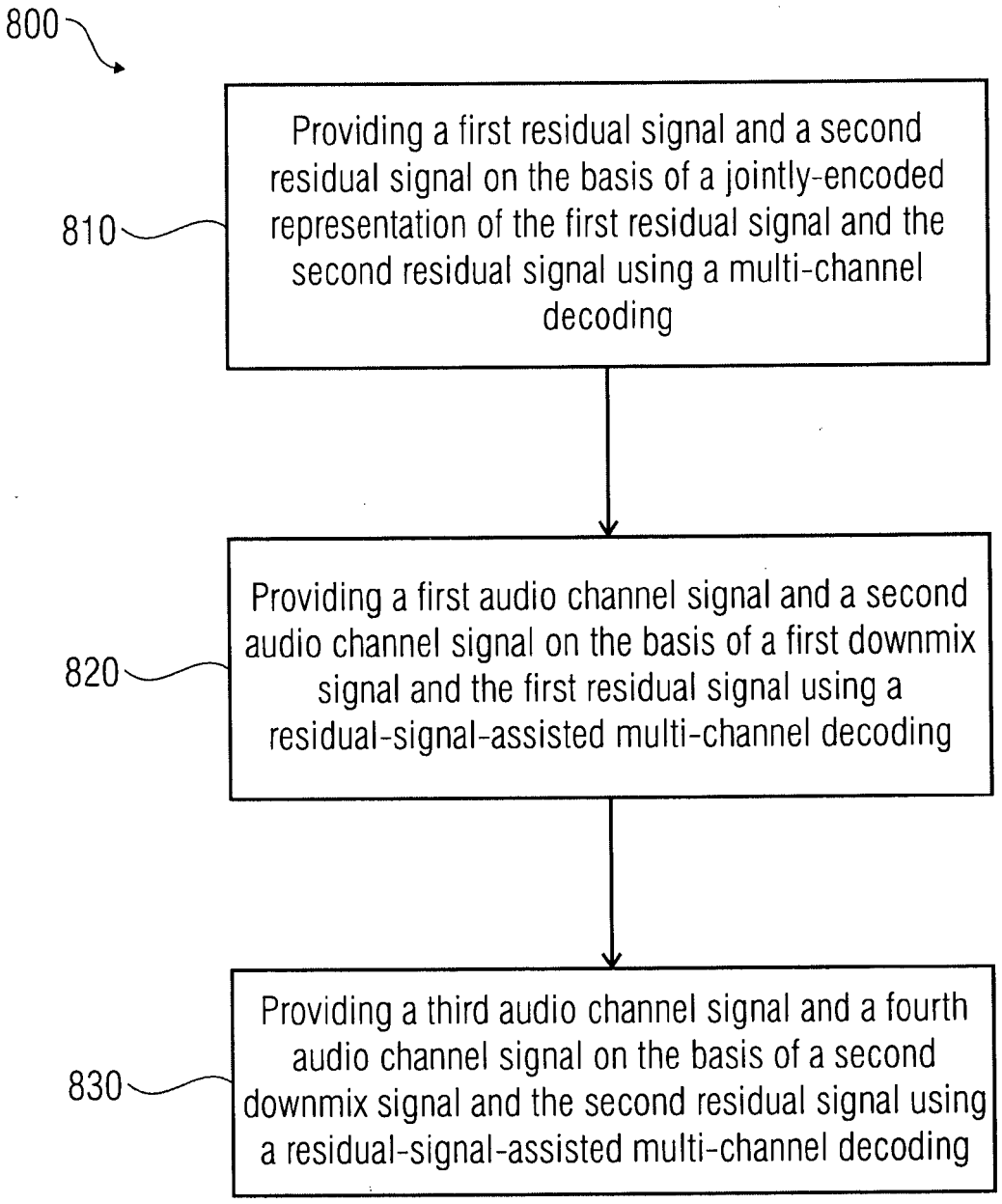
800
Providing a first residual signal and a second residual signal on the basis of a jointly-encoded representation of the first residual signal and the second residual signal using a multi-channel decoding
810
Providing a first audio channel signal and a second audio channel signal on the basis of a first downmix signal and the first residual signal using a residual-signal-assisted multi-channel decoding
820
Providing a third audio channel signal and a fourth audio channel signal on the basis of a second downmix signal and the second residual signal using a residual-signal-assisted multi-channel decoding
830

FIG 8

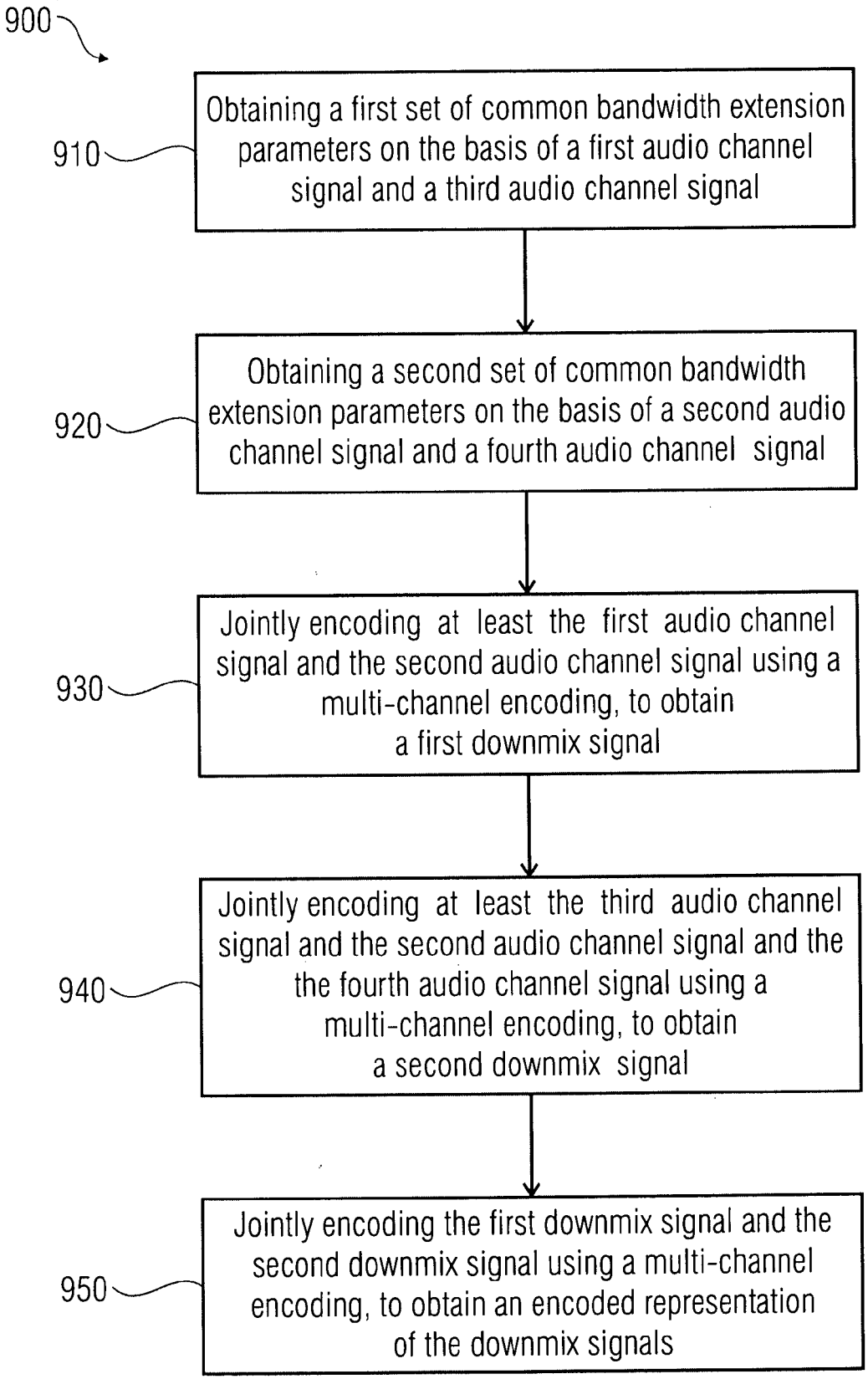
900
910
Obtaining a first set of common bandwidth extension parameters on the basis of a first audio channel signal and a third audio channel signal
920
Obtaining a second set of common bandwidth extension parameters on the basis of a second audio channel signal and a fourth audio channel signal
930
Jointly encoding at least the first audio channel signal and the second audio channel signal using a multi-channel encoding, to obtain a first downmix signal
940
Jointly encoding at least the third audio channel signal and the second audio channel signal and the the fourth audio channel signal using a multi-channel encoding, to obtain a second downmix signal
950
Jointly encoding the first downmix signal and the second downmix signal using a multi-channel encoding, to obtain an encoded representation of the downmix signals

FIG 9

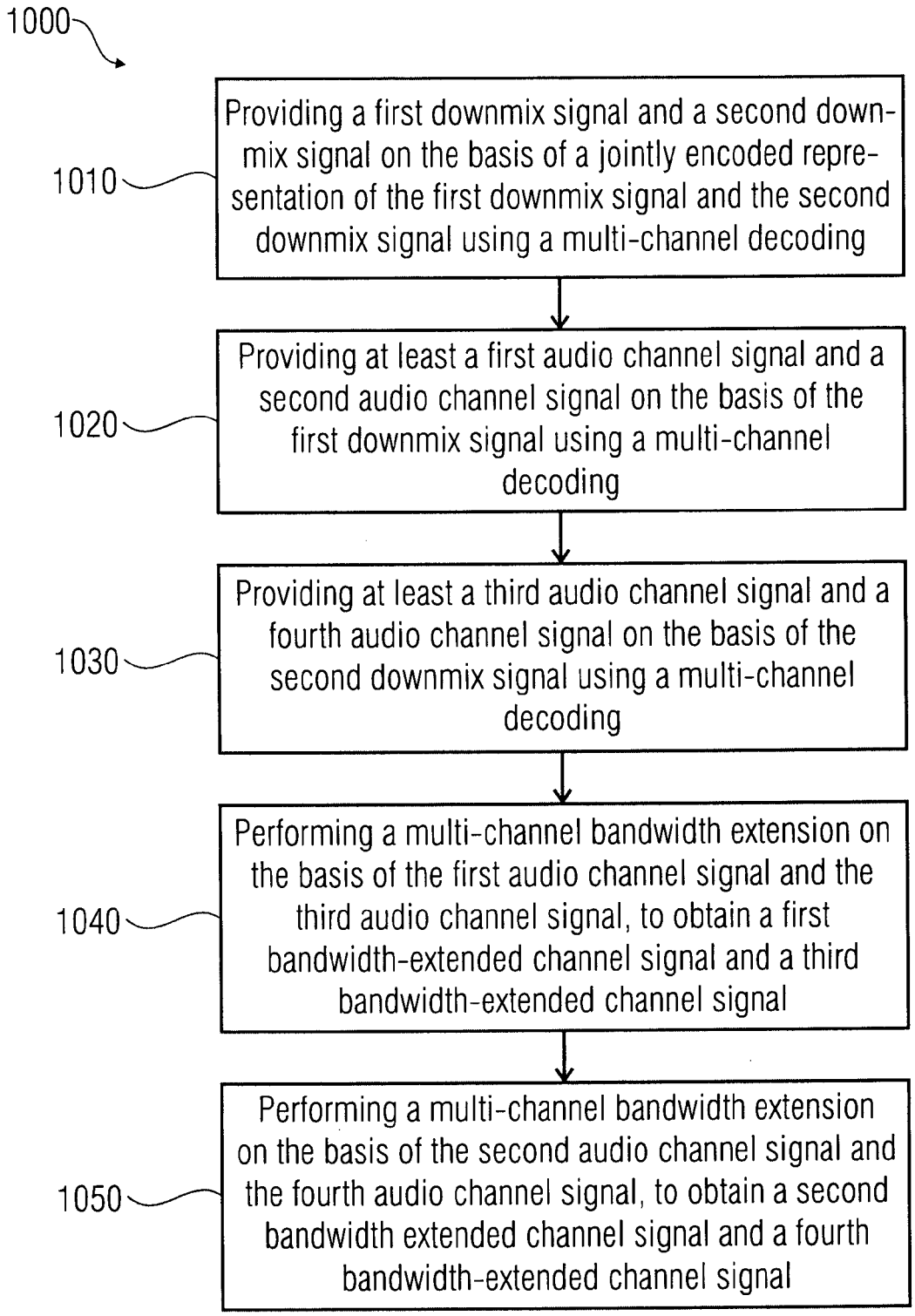
1000
Providing a first downmix signal and a second downmix signal on the basis of a jointly encoded representation of the first downmix signal and the second downmix signal using a multi-channel decoding
1010
Providing at least a first audio channel signal and a second audio channel signal on the basis of the first downmix signal using a multi-channel decoding
1020
Providing at least a third audio channel signal and a fourth audio channel signal on the basis of the second downmix signal using a multi-channel decoding
1030
Performing a multi-channel bandwidth extension on the basis of the first audio channel signal and the third audio channel signal, to obtain a first bandwidth-extended channel signal and a third bandwidth-extended channel signal
1040
Performing a multi-channel bandwidth extension on the basis of the second audio channel signal and the fourth audio channel signal, to obtain a second bandwidth extended channel signal and a fourth bandwidth-extended channel signal
1050

FIG 10

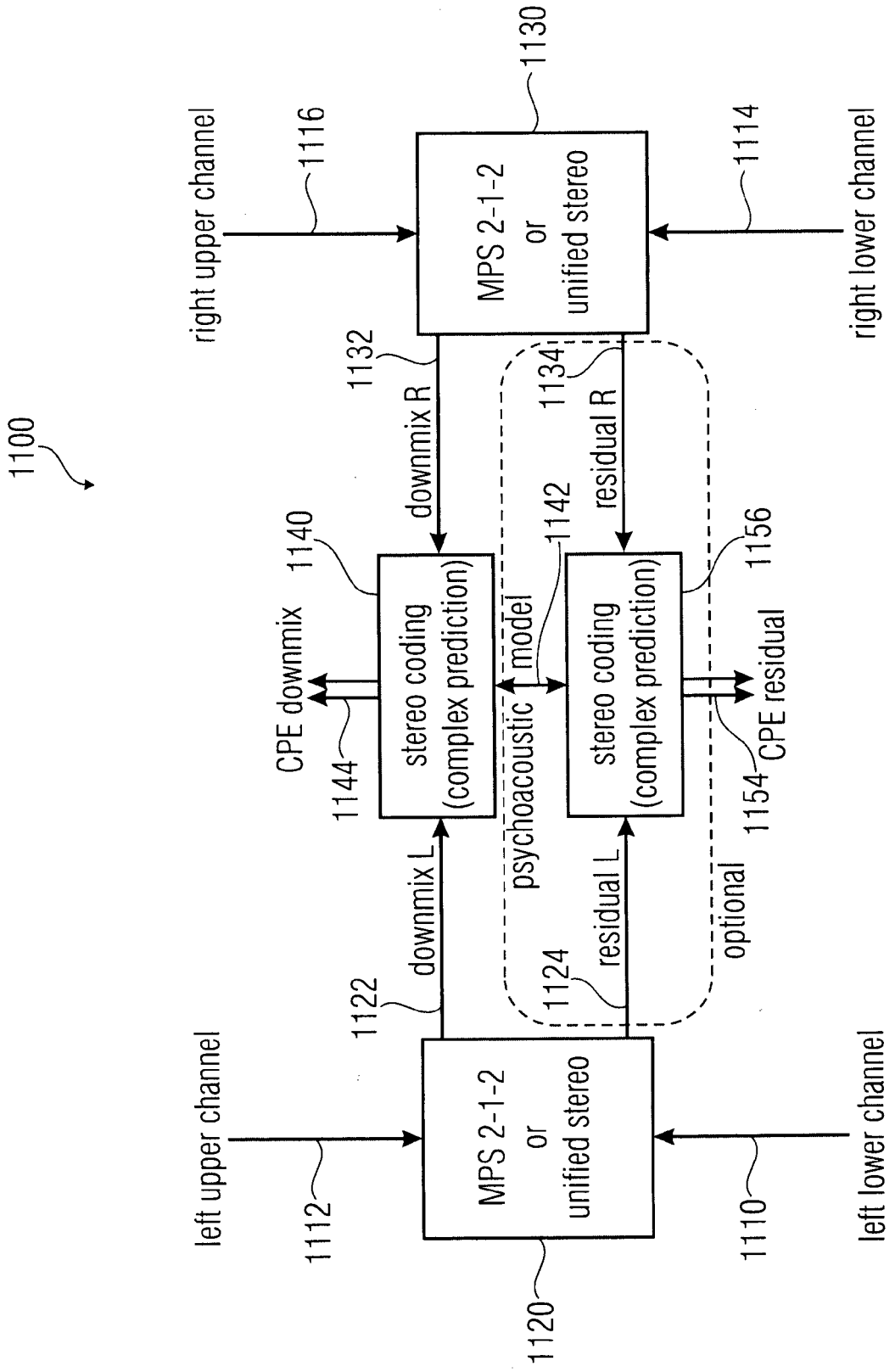
1100
right upper channel
1116
1130
MPS 2-1-2
or
unified stereo
1114
right lower channel
1132
downmix R
1134
residual R
1140
1142
1156
CPE downmix
stereo coding
(complex prediction)
psychoacoustic
model
stereo coding
(complex prediction)
CPE residual
1144
1154
downmix L
residual L
optional
1122
1124
left upper channel
1112
MPS 2-1-2
or
unified stereo
1110
left lower channel
1120

FIG 11

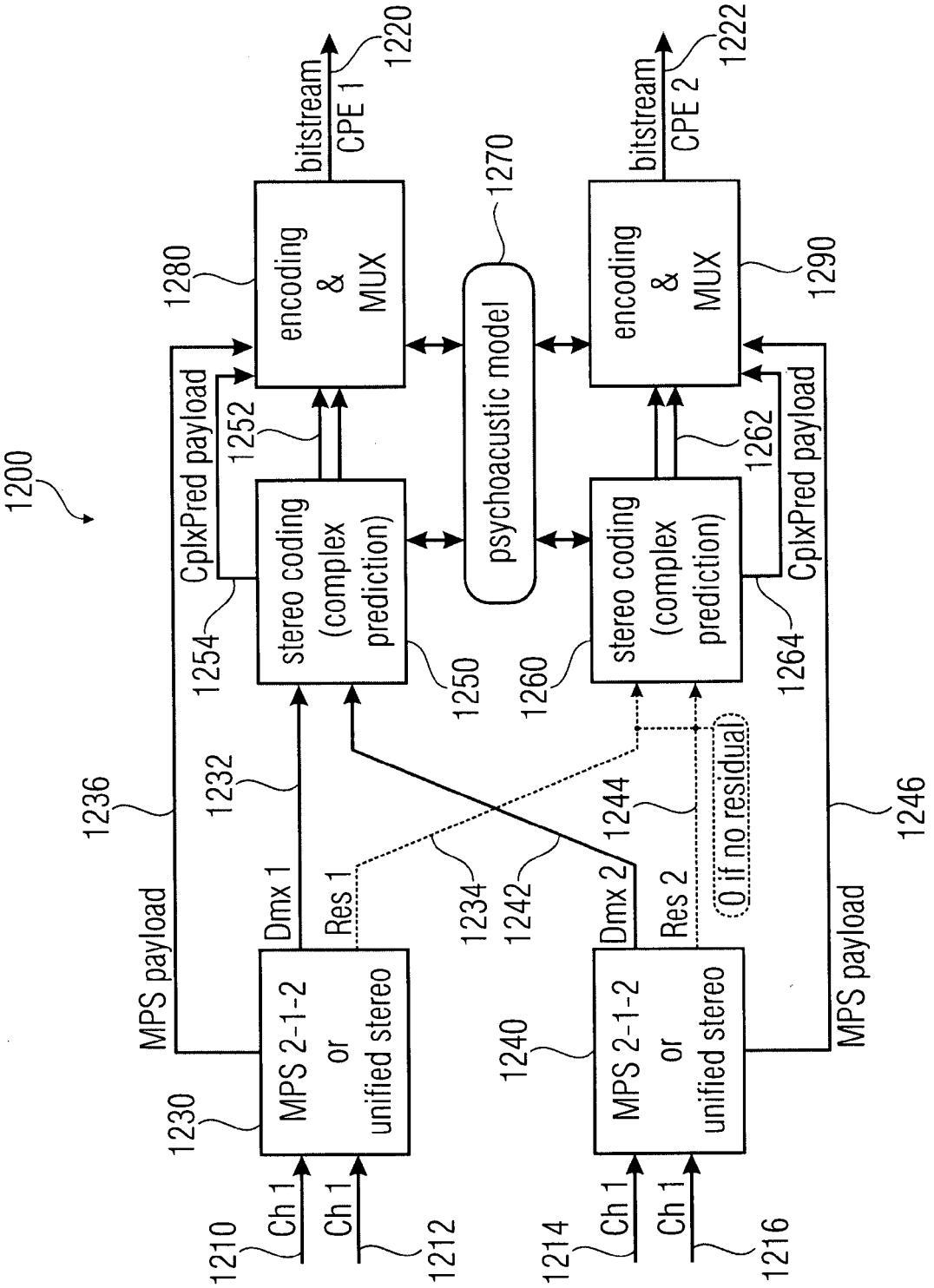
1200
1210
Ch 1
1212
Ch 1
1214
Ch 1
1216
Ch 1
1230
MPS 2-1-2 or unified stereo
1240
MPS 2-1-2 or unified stereo
1232
Dmx 1
Res 1
1234
1242
Dmx 2
Res 2
0 if no residual
1244
1236
MPS payload
1246
MPS payload
1250
stereo coding (complex prediction)
1260
stereo coding (complex prediction)
1252
CplxPred payload
1254
1262
CplxPred payload
1264
1270
psychoacustic model
1280
encoding & MUX
1290
encoding & MUX
bitstream
CPE 1
1220
bitstream
CPE 2
1222

FIG 12

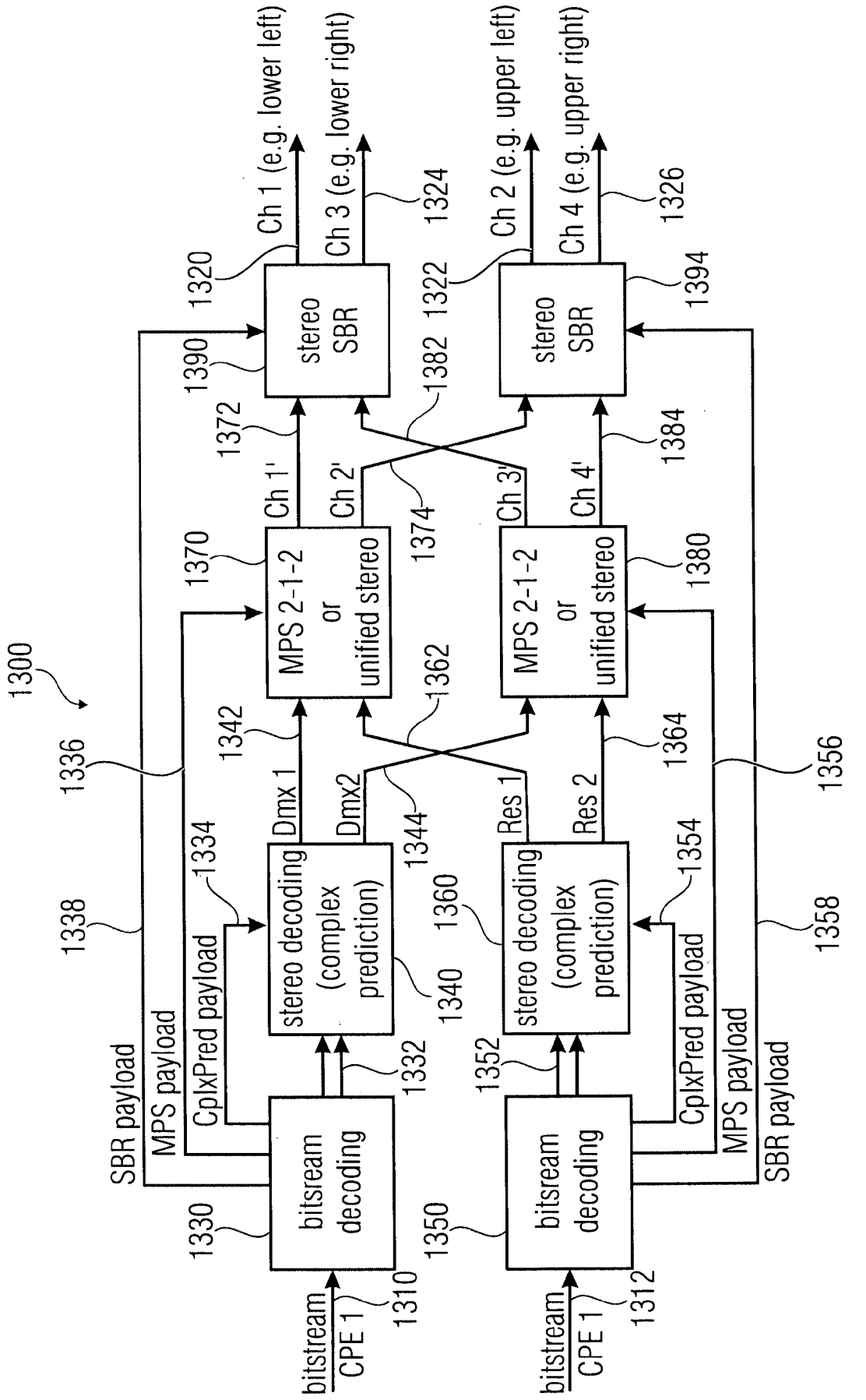
1300
bitstream CPE 1
1310
bitstream decoding
1330
SBR payload
MPS payload
CplxPred payload
1332
stereo decoding (complex prediction)
1340
1334
1338
1336
Dmx 1
Dmx2
1342
1344
1362
MPS 2-1-2 or unified stereo
1370
Ch 1'
Ch 2'
1372
1374
1382
stereo SBR
1390
1320
Ch 1 (e.g. lower left)
Ch 3 (e.g. lower right)
1324
1322
Ch 2 (e.g. upper left)
Ch 4 (e.g. upper right)
1326
1394
1384
Ch 3'
Ch 4'
1380
1364
Res 1
Res 2
1360
1354
1352
1350
1312
1358
1356

FIG 13

```
UsacChannelPairElementConfig (sbrRatioIndex)
{
        UsacCoreConfig () ;
        if  (sbrRatioIndex > 0)  {
                SbrConfig () ;
                stereoConfigIndex;                    2        uimsbf
        } else {
                stereoConfigIndex = 0;
        }
        if  (stereoConfigIndex > 0)  {
                Mps212Config(stereoConfigIndex) ;
        }
+       qceIndex                                      2        uimsbf
}
```

FIG 14A

qceIndex	meaning
0	Stereo CPE
1	QCE without residual
2	QCE with residual
3	-reserved-

FIG 14B

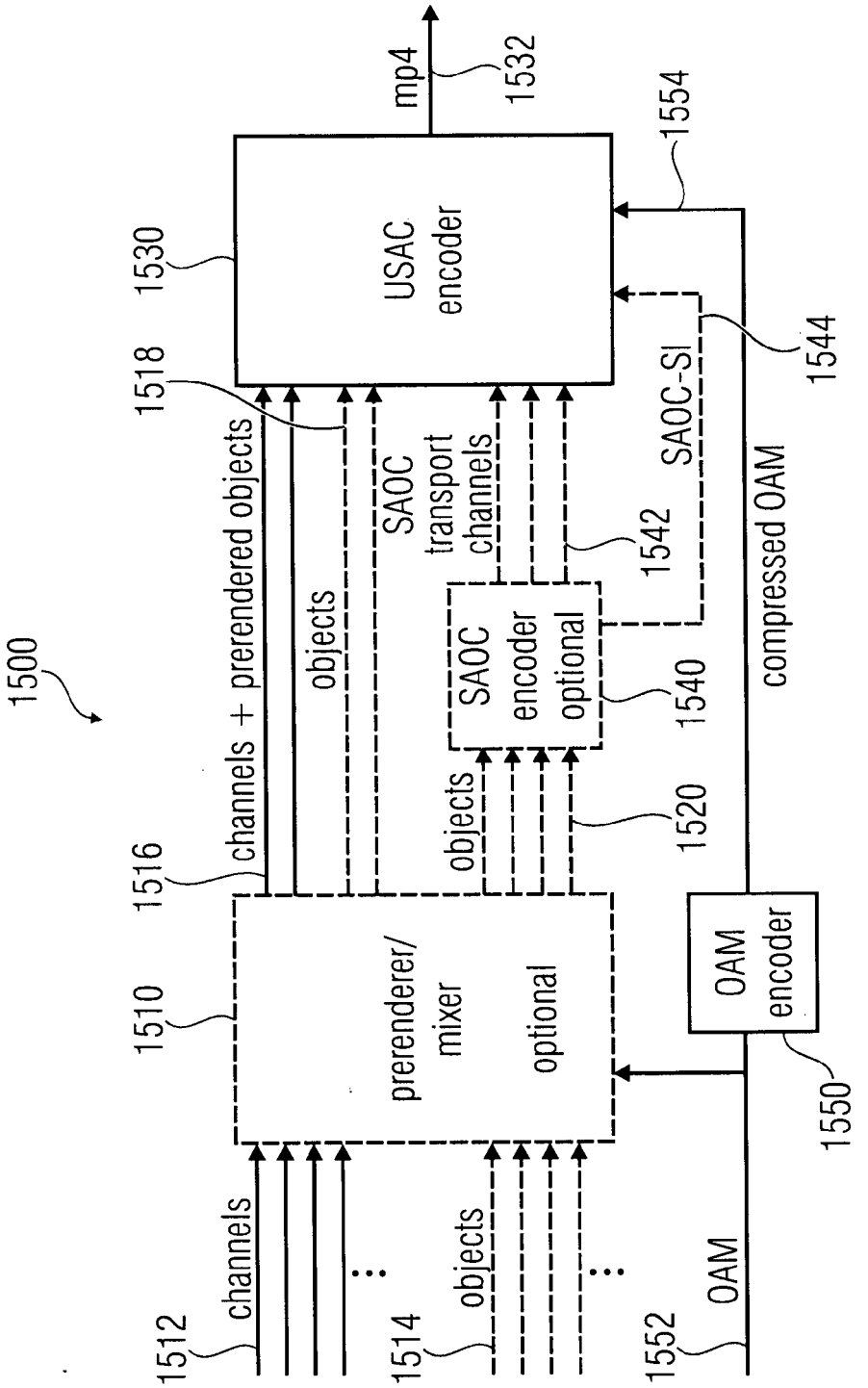

OVERVIEW 3D-AUDIO ENCODER

FIG 15

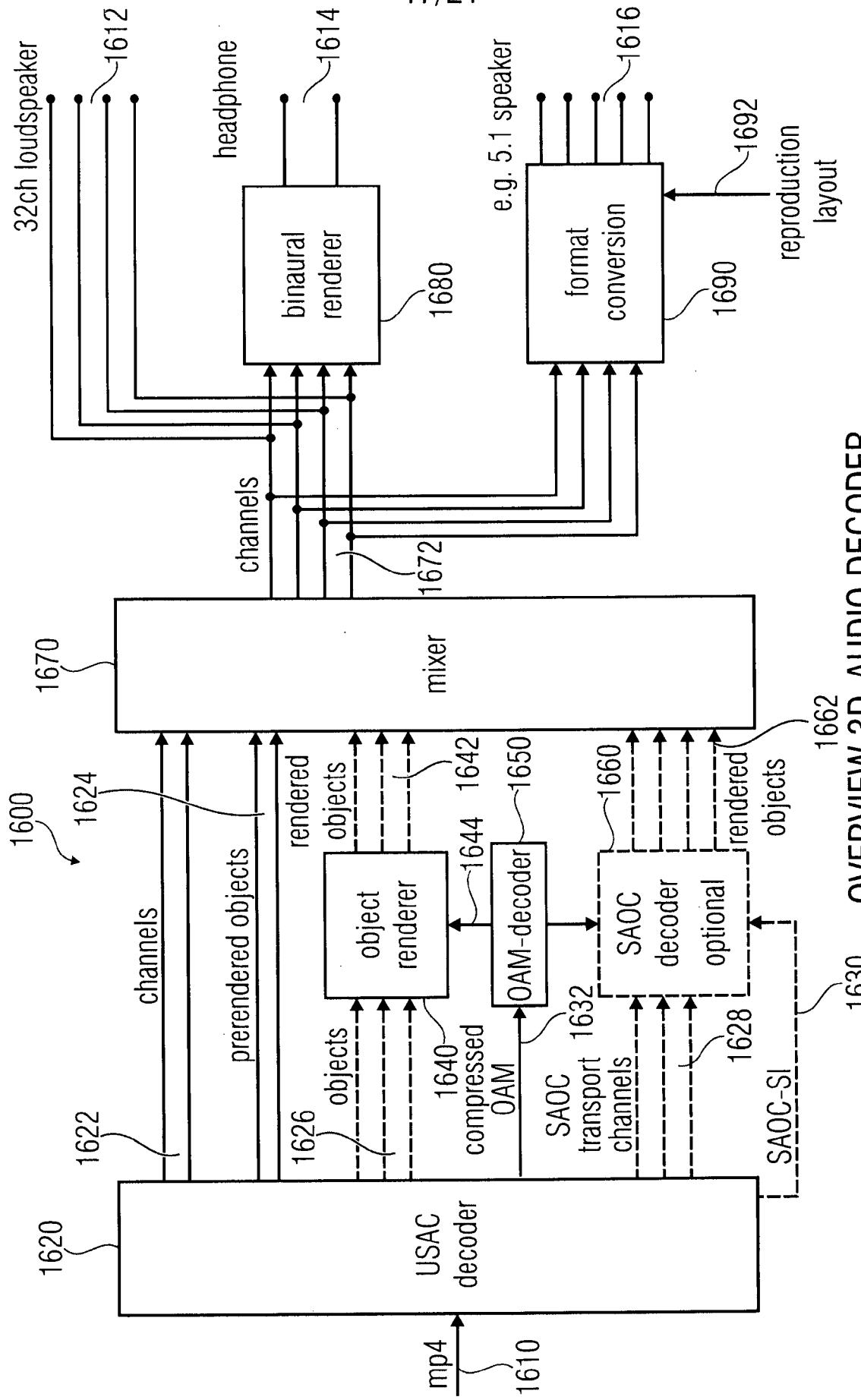

FIG 16 OVERVIEW 3D-AUDIO DECODER

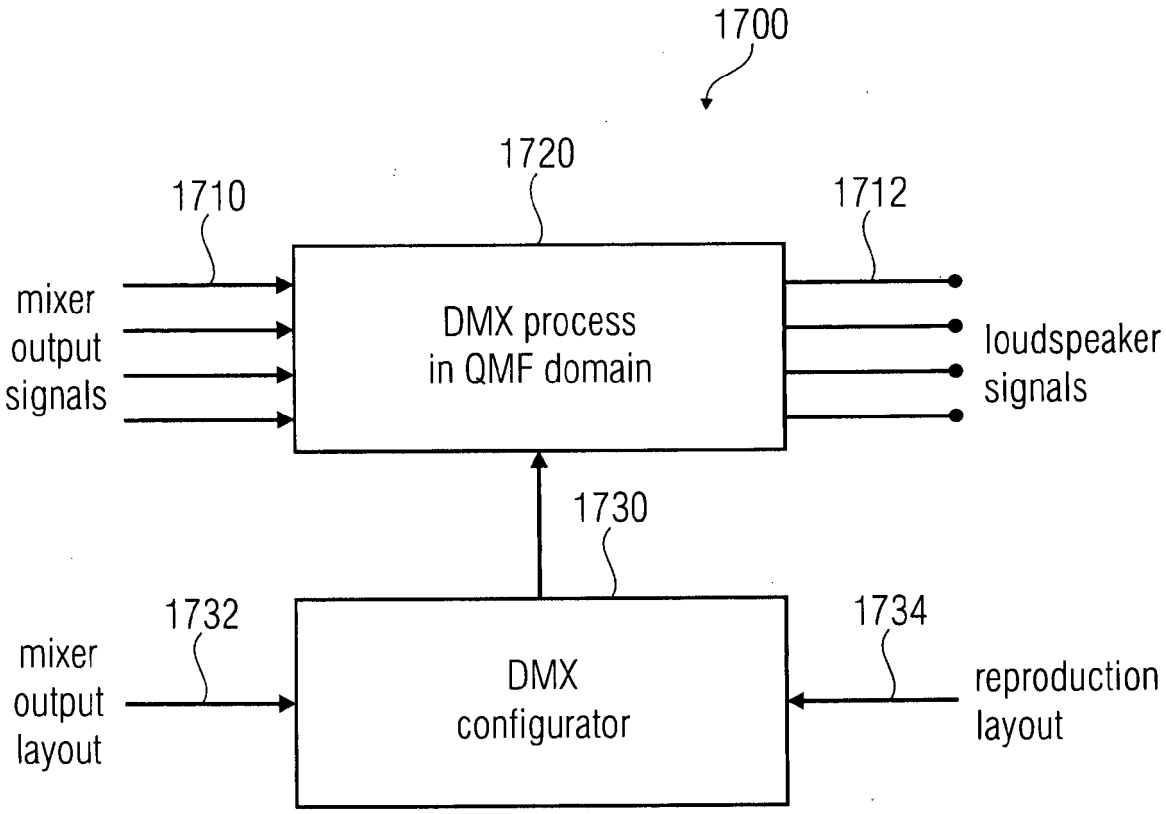

STRUCTURE OF FORMAT CONVERTER

FIG 17

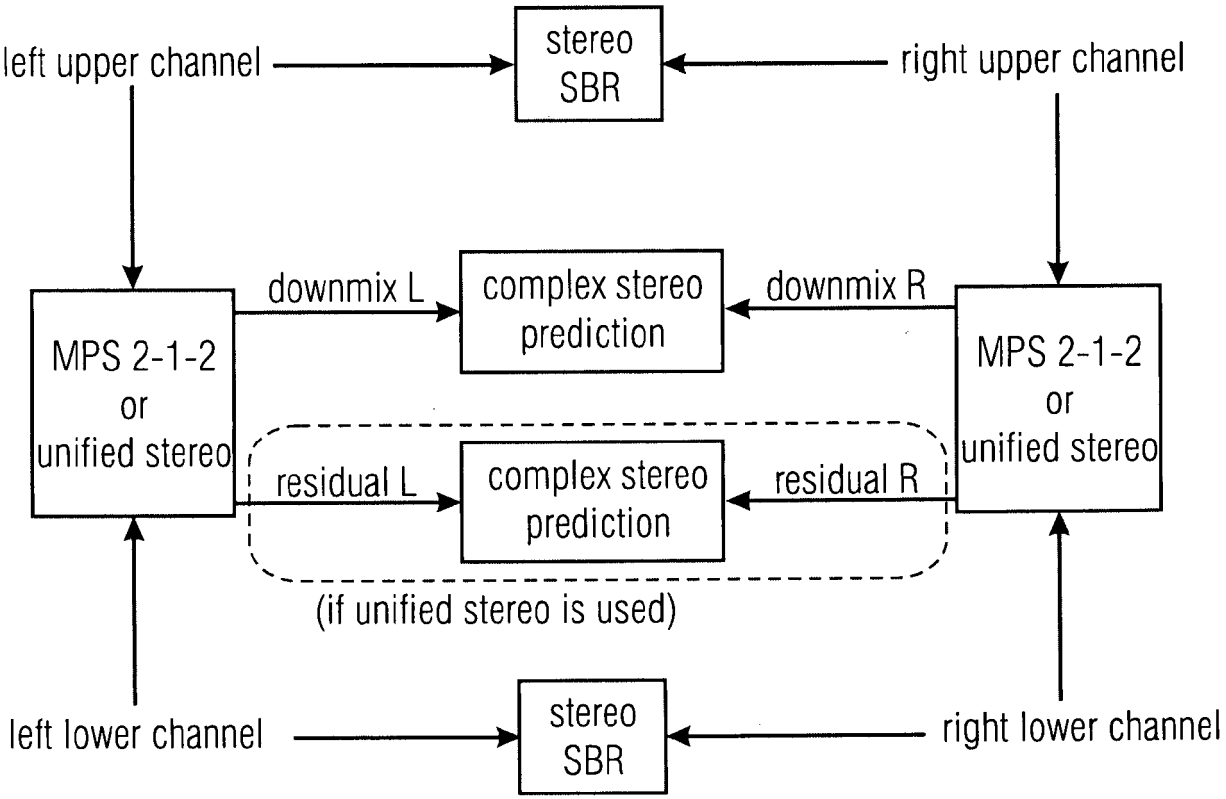
left upper channel
stereo SBR
right upper channel
downmix L
complex stereo prediction
downmix R
MPS 2-1-2 or unified stereo
residual L
complex stereo prediction
residual R
MPS 2-1-2 or unified stereo
(if unified stereo is used)
left lower channel
stereo SBR
right lower channel

FIG 18

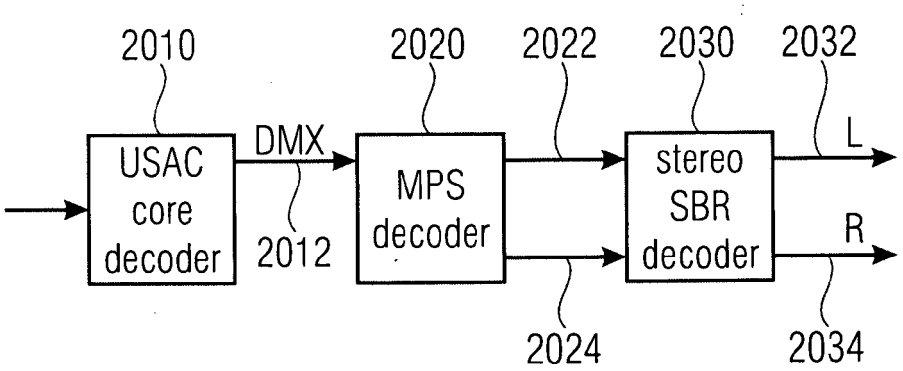
2010
2020
2022
2030
2032
USAC core decoder
DMX
2012
MPS decoder
stereo SBR decoder
L
R
2024
2034

FIG 19

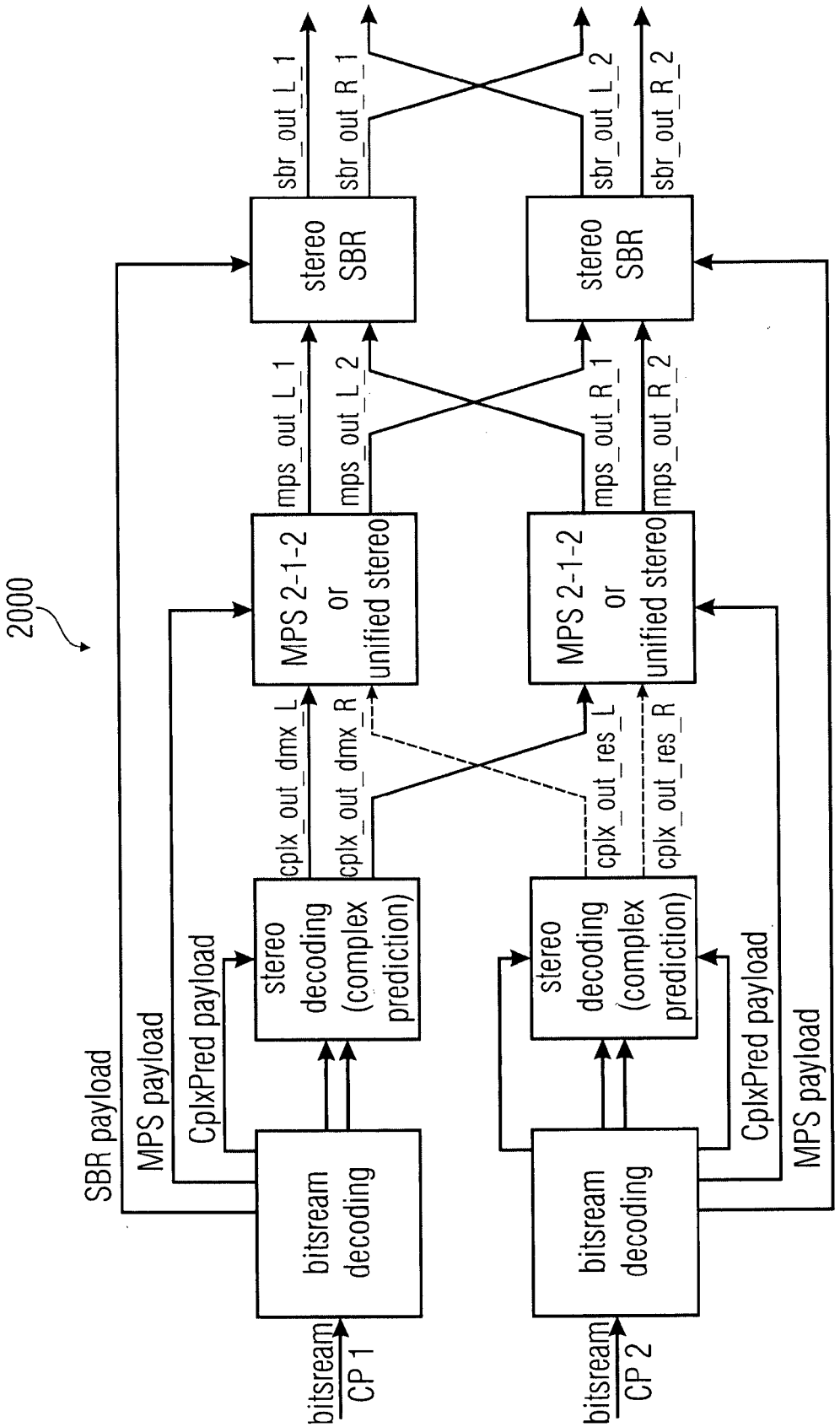

QCE DECODER SCHEMATICS
FIG 20

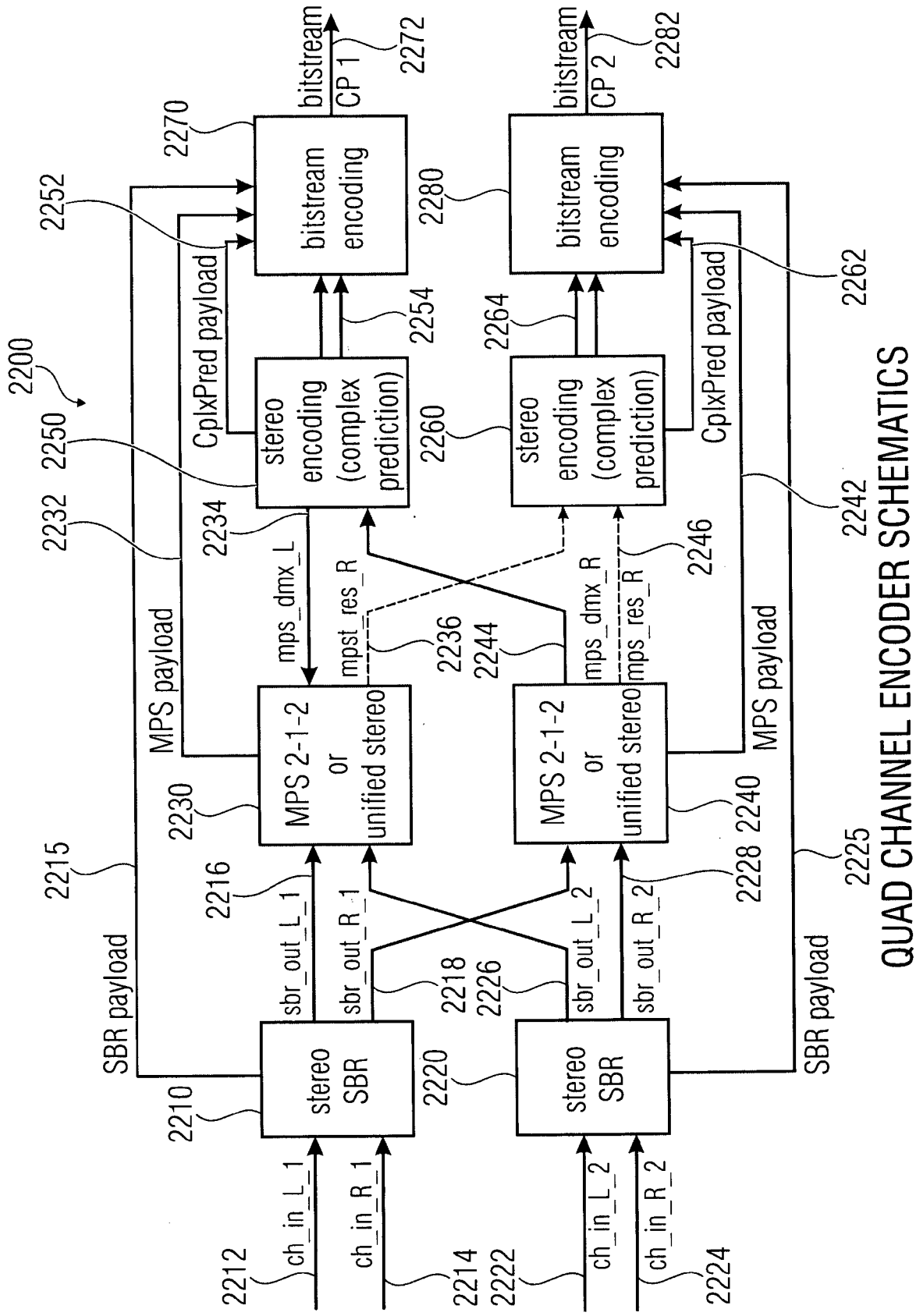

QUAD CHANNEL ENCODER SCHEMATICS

FIG 21