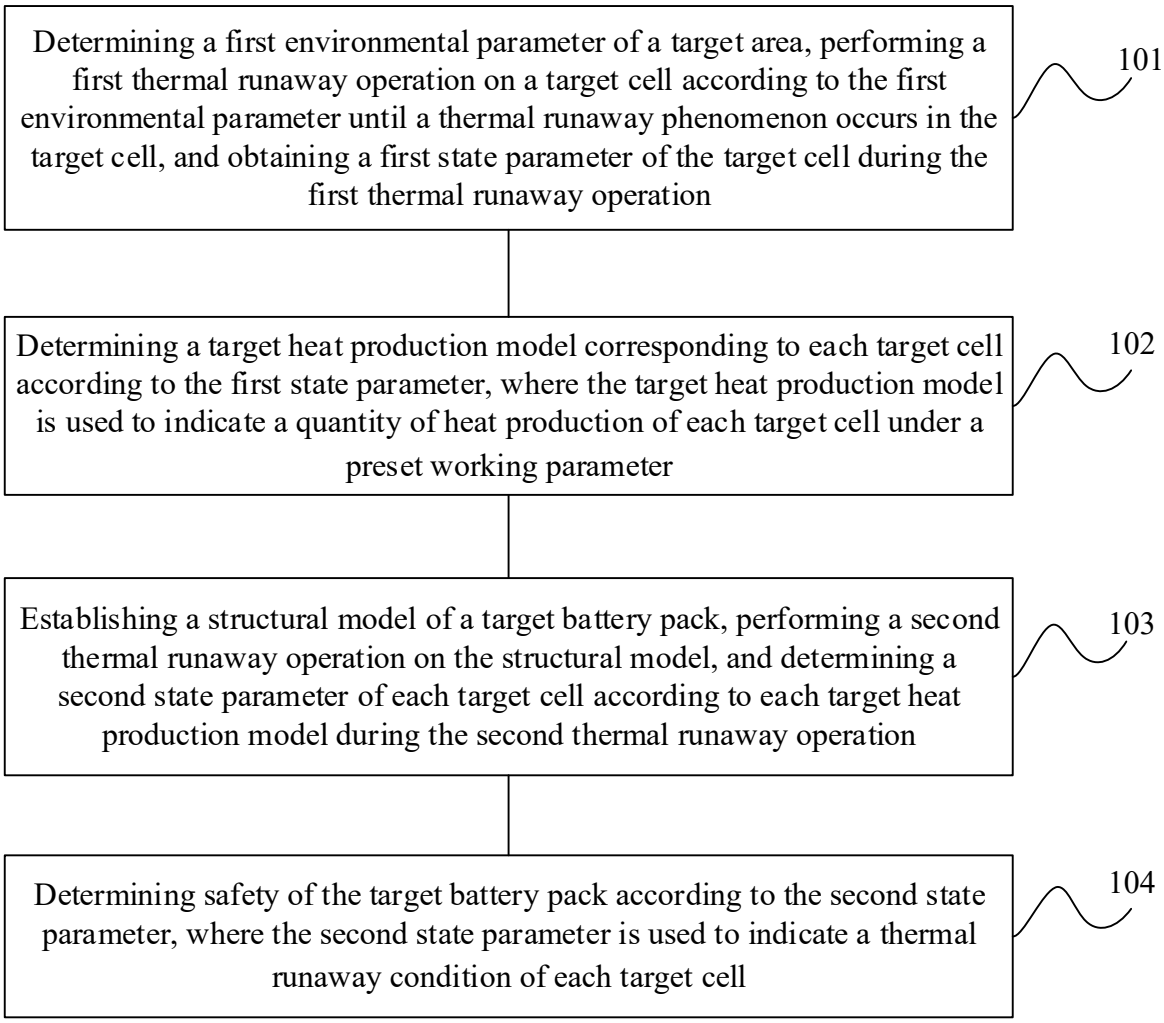
Determining a first environmental parameter of a target area, performing a first thermal runaway operation on a target cell according to the first environmental parameter until a thermal runaway phenomenon occurs in the target cell, and obtaining a first state parameter of the target cell during the first thermal runaway operation
101
Determining a target heat production model corresponding to each target cell according to the first state parameter, where the target heat production model is used to indicate a quantity of heat production of each target cell under a preset working parameter
102
Establishing a structural model of a target battery pack, performing a second thermal runaway operation on the structural model, and determining a second state parameter of each target cell according to each target heat production model during the second thermal runaway operation
103
Determining safety of the target battery pack according to the second state parameter, where the second state parameter is used to indicate a thermal runaway condition of each target cell
104

FIG. 1

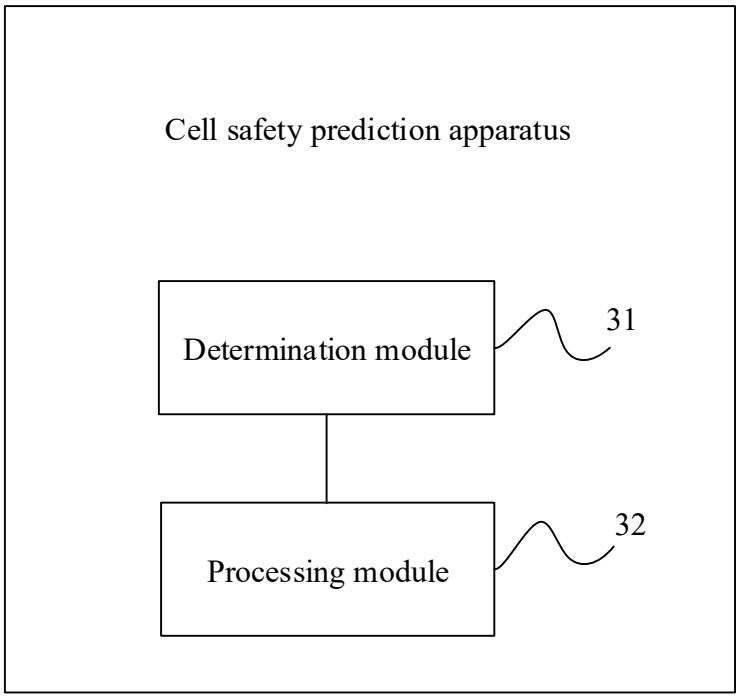
Cell safety prediction apparatus
Determination module
31
Processing module
32

FIG. 2

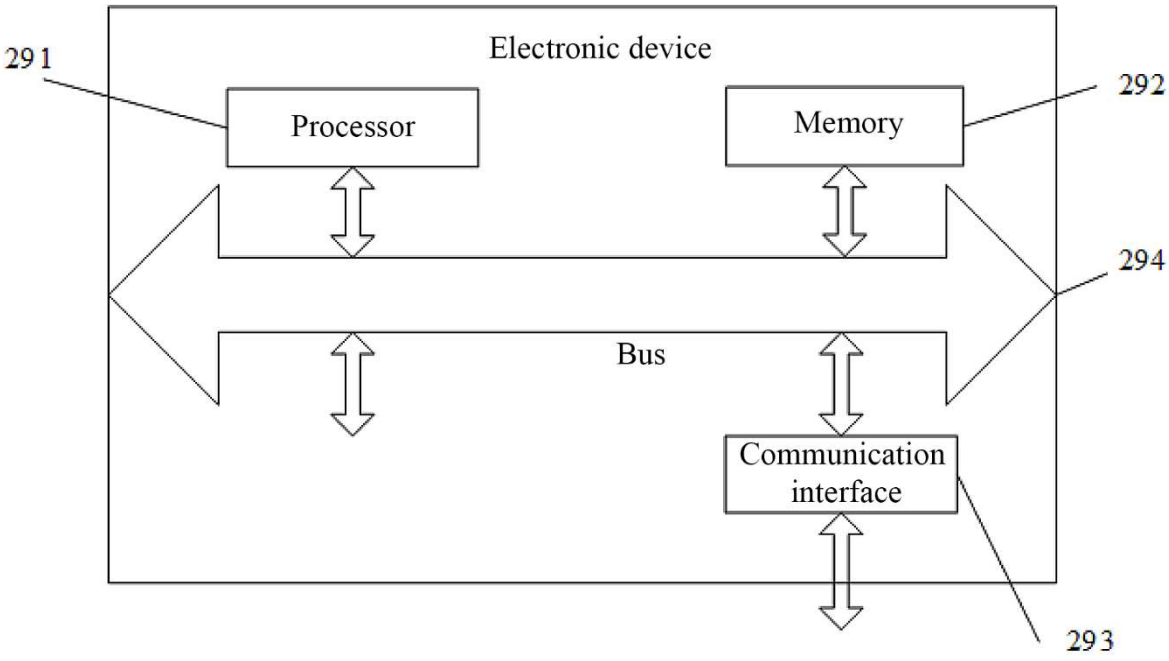
Electronic device
291
Processor
Memory
292
294
Bus
Communication interface
293

FIG. 3