[Figures]

[Figure 1]

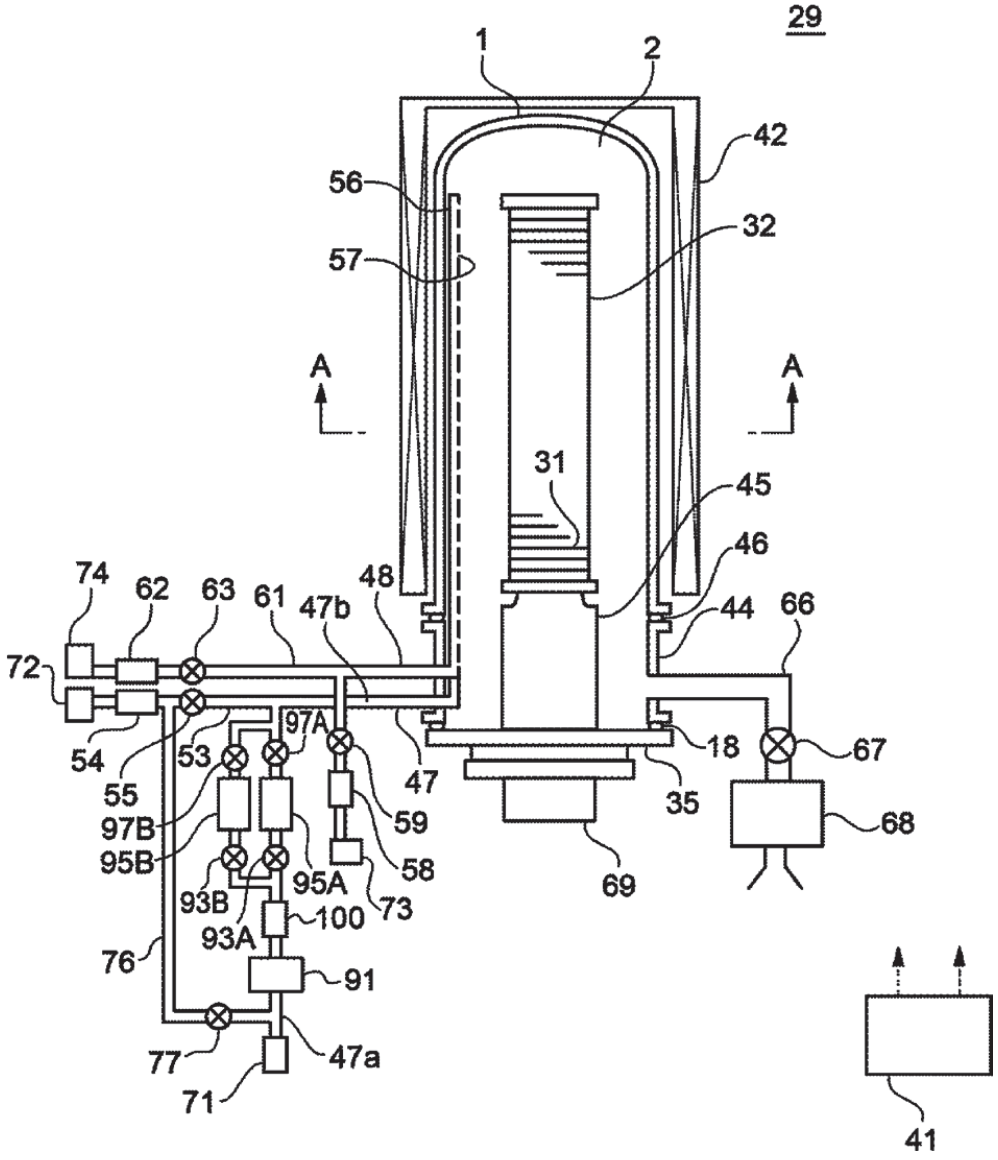

[Figure 2]

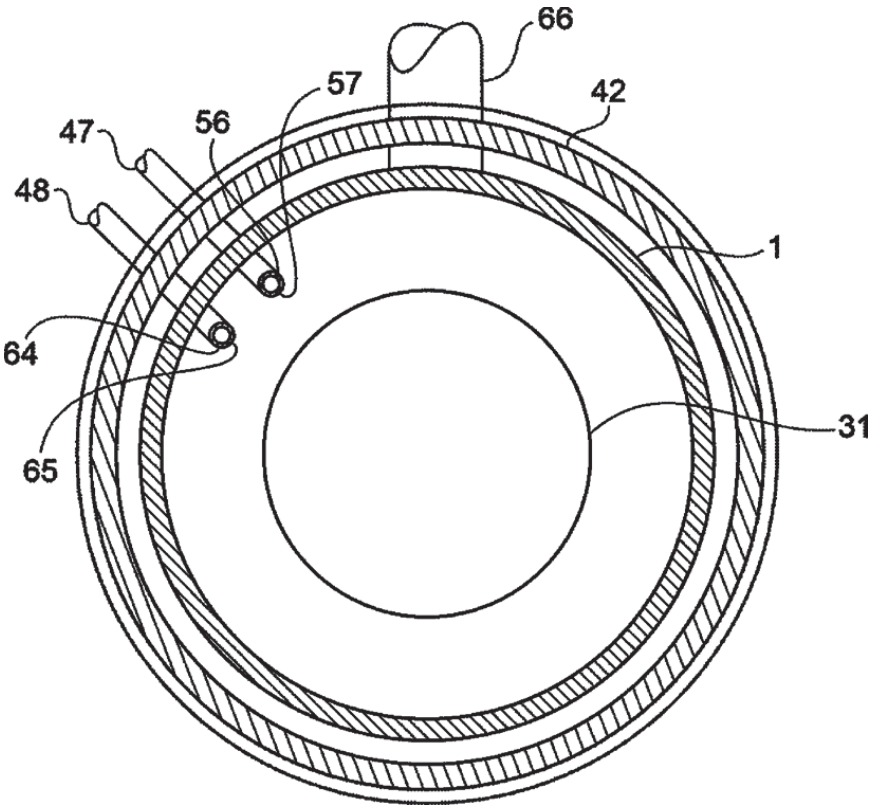

[Figure 3]

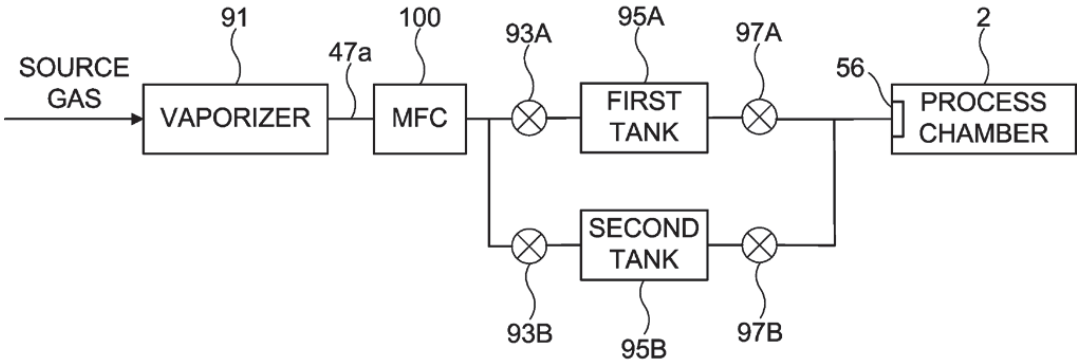

[Figure 4]

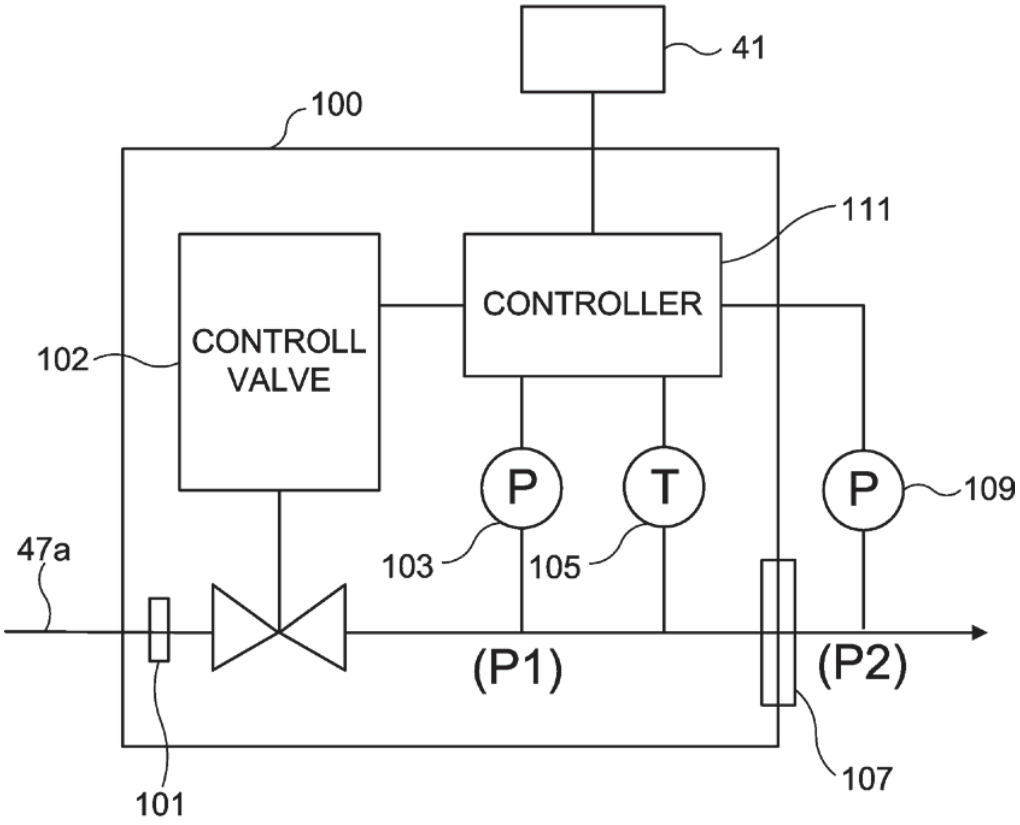
41
100
111
CONTROLLER
CONTROLL VALVE
102
P
T
P
109
103
105
47a
(P1)
(P2)
101
107

[Figure 5]

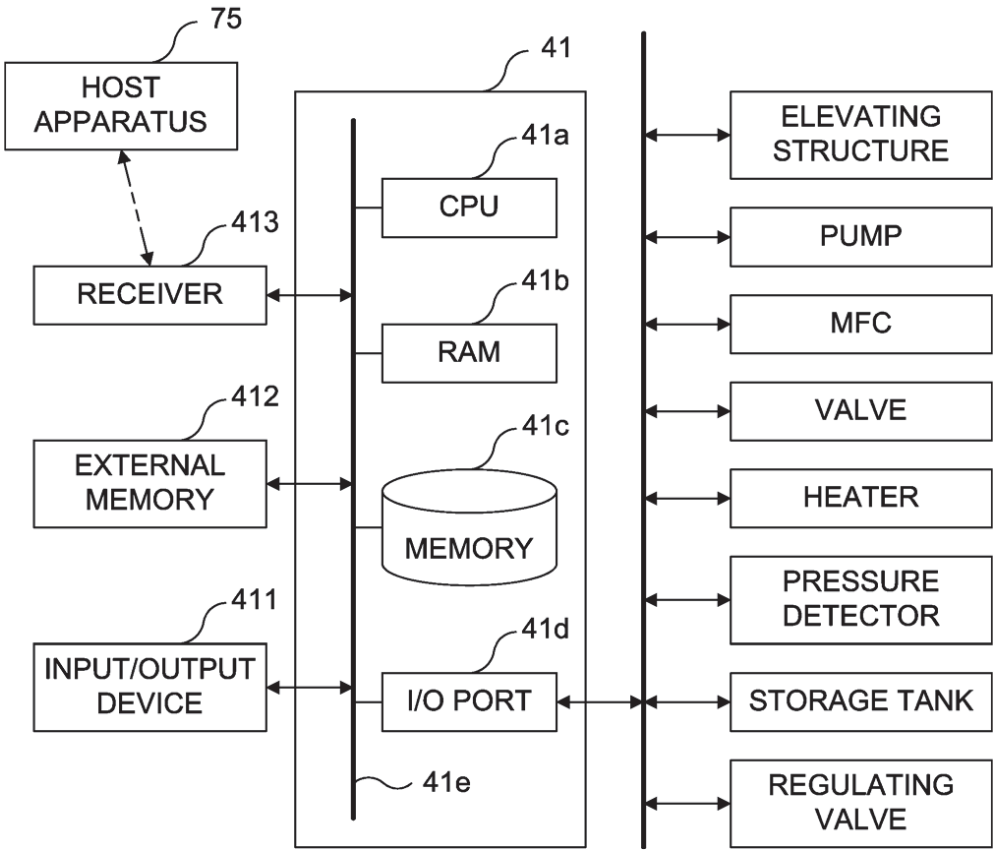
75
HOST APPARATUS
41
41a
CPU
413
RECEIVER
41b
RAM
412
EXTERNAL MEMORY
41c
MEMORY
411
INPUT/OUTPUT DEVICE
41d
I/O PORT
41e
ELEVATING STRUCTURE
PUMP
MFC
VALVE
HEATER
PRESSURE DETECTOR
STORAGE TANK
REGULATING VALVE

[Figure 6]

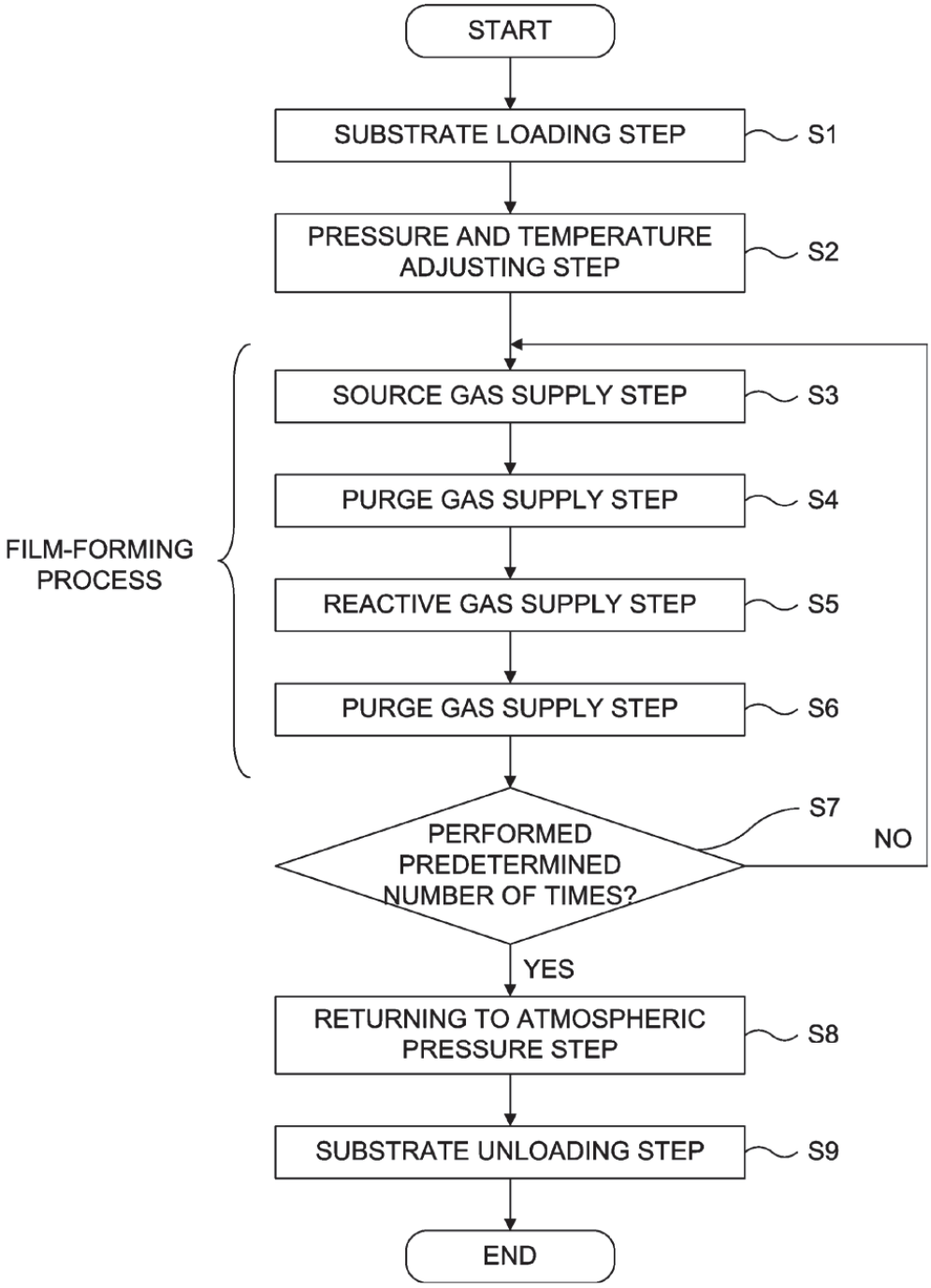
START
SUBSTRATE LOADING STEP
S1
PRESSURE AND TEMPERATURE ADJUSTING STEP
S2
FILM-FORMING PROCESS
SOURCE GAS SUPPLY STEP
S3
PURGE GAS SUPPLY STEP
S4
REACTIVE GAS SUPPLY STEP
S5
PURGE GAS SUPPLY STEP
S6
PERFORMED PREDETERMINED NUMBER OF TIMES?
S7
NO
YES
RETURNING TO ATMOSPHERIC PRESSURE STEP
S8
SUBSTRATE UNLOADING STEP
S9
END

[Figure 7]

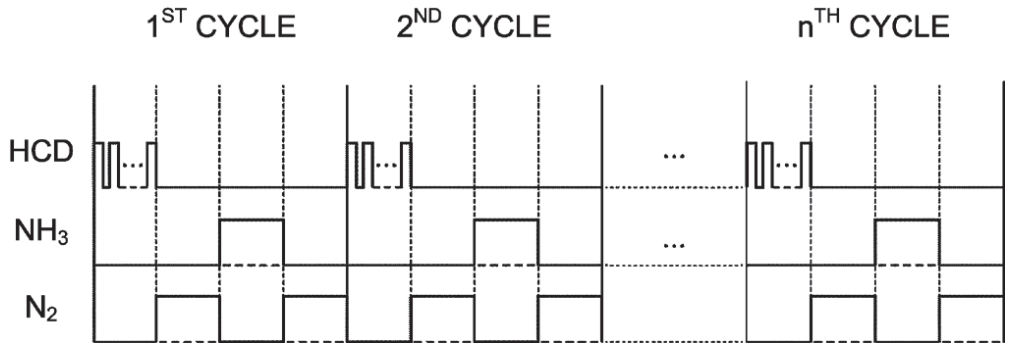

[Figure 8]

