(12) INTERNATIONAL APPLICATION PUBLISHED UNDER THE PATENT COOPERATION TREATY (PCT)

(19) World Intellectual Property Organization
International Bureau

(43) International Publication Date
14 August 2025 (14.08.2025)

WIPO | PCT

(10) International Publication Number
WO 2025/171253 A1

(51) International Patent Classification:
H01L 21/02 (2006.01) *C23C 16/26* (2006.01)
H01L 21/311 (2006.01) *C23C 16/509* (2006.01)
C23C 16/04 (2006.01)

(21) International Application Number:
PCT/US2025/015003

(22) International Filing Date:
07 February 2025 (07.02.2025)

(25) Filing Language: English

(26) Publication Language: English

(30) Priority Data:
63/552,058 09 February 2024 (09.02.2024) US

(71) Applicant: **APPLIED MATERIALS, INC.** [US/US]; 3050 Bowers Avenue, Santa Clara, California 95054 (US).

(72) Inventors: **WANG, Peiqi**; c/o Applied Materials, Inc., Law Dept., M/S 1269, 3050 Bowers Avenue, Santa Clara, California 95054 (US). **GADDAMEDI, Vamshi Krishna**; c/o Applied Materials, Inc., Law Dept., M/S 1269, 3050 Bowers Avenue, Santa Clara, California 95054 (US). **LIN, Tze-Yu**; c/o Applied Materials, Inc., Law Dept., M/S 1269, 3050 Bowers Avenue, Santa Clara, California 95054 (US). **NAGARAJAN, Anantha Venkataraman**; c/o Applied Materials, Inc., Law Dept., M/S 1269, 3050 Bowers Avenue, Santa Clara, California 95054 (US). **KHAJA, Abdul Aziz**; c/o Applied Materials, Inc., Law Dept., M/S 1269, 3050 Bowers Avenue, Santa Clara, California 95054 (US).

(74) Agent: **DOUGHERTY, Chad M.** et al.; Patterson + Sheridan LLP, 24 Greenway Plaza, Suite 1600, Houston, Texas 77046 (US).

(81) Designated States *(unless otherwise indicated, for every kind of national protection available)*: AE, AG, AL, AM,

(54) Title: CARBON GAPFILL GROWTH AND PATTERN LOADING CONTROL FOR VARIABLE CD/AR FEATURES

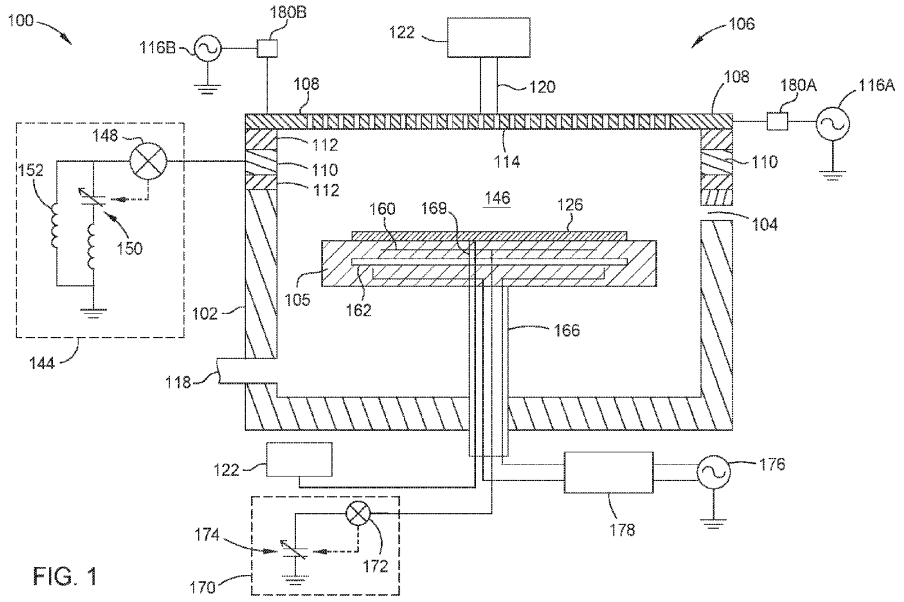

FIG. 1

(57) Abstract: Embodiments of the present disclosure generally relate to methods for forming carbon gapfill layers including positioning a substrate with at least one feature on a substrate support in a processing volume of a process chamber, flowing a hydrocarbon precursor gas into the processing volume to provide a deposition species, flowing an etchant gas into the processing volume to provide an etch species, providing dual frequency RF power to the processing volume to maintain an RF plasma, where the dual frequency RF power includes a constant HFRF and a pulsing LFRF and forming a carbon gapfill layer in at least one feature using the RF plasma to deposit the deposition species on the substrate and etch some of the deposition species deposited with the etch species. A device including a substrate with at least one feature and a carbon gapfill layer with an upper portion and a lower portion.

WO 2025/171253 A1

[Continued on next page]

AO, AT, AU, AZ, BA, BB, BG, BH, BN, BR, BW, BY, BZ, CA, CH, CL, CN, CO, CR, CU, CV, CZ, DE, DJ, DK, DM, DO, DZ, EC, EE, EG, ES, FI, GB, GD, GE, GH, GM, GT, HN, HR, HU, ID, IL, IN, IQ, IR, IS, IT, JM, JO, JP, KE, KG, KH, KN, KP, KR, KW, KZ, LA, LC, LK, LR, LS, LU, LY, MA, MD, MG, MK, MN, MU, MW, MX, MY, MZ, NA, NG, NI, NO, NZ, OM, PA, PE, PG, PH, PL, PT, QA, RO, RS, RU, RW, SA, SC, SD, SE, SG, SK, SL, ST, SV, SY, TH, TJ, TM, TN, TR, TT, TZ, UA, UG, US, UY, UZ, VC, VN, WS, ZA, ZM, ZW.

(84) **Designated States** *(unless otherwise indicated, for every kind of regional protection available)*: ARIPO (BW, CV, GH, GM, KE, LR, LS, MW, MZ, NA, RW, SC, SD, SL, ST, SZ, TZ, UG, ZM, ZW), Eurasian (AM, AZ, BY, KG, KZ, RU, TJ, TM), European (AL, AT, BE, BG, CH, CY, CZ, DE, DK, EE, ES, FI, FR, GB, GR, HR, HU, IE, IS, IT, LT, LU, LV, MC, ME, MK, MT, NL, NO, PL, PT, RO, RS, SE, SI, SK, SM, TR), OAPI (BF, BJ, CF, CG, CI, CM, GA, GN, GQ, GW, KM, ML, MR, NE, SN, TD, TG).

Published:

— *with international search report (Art. 21(3))*