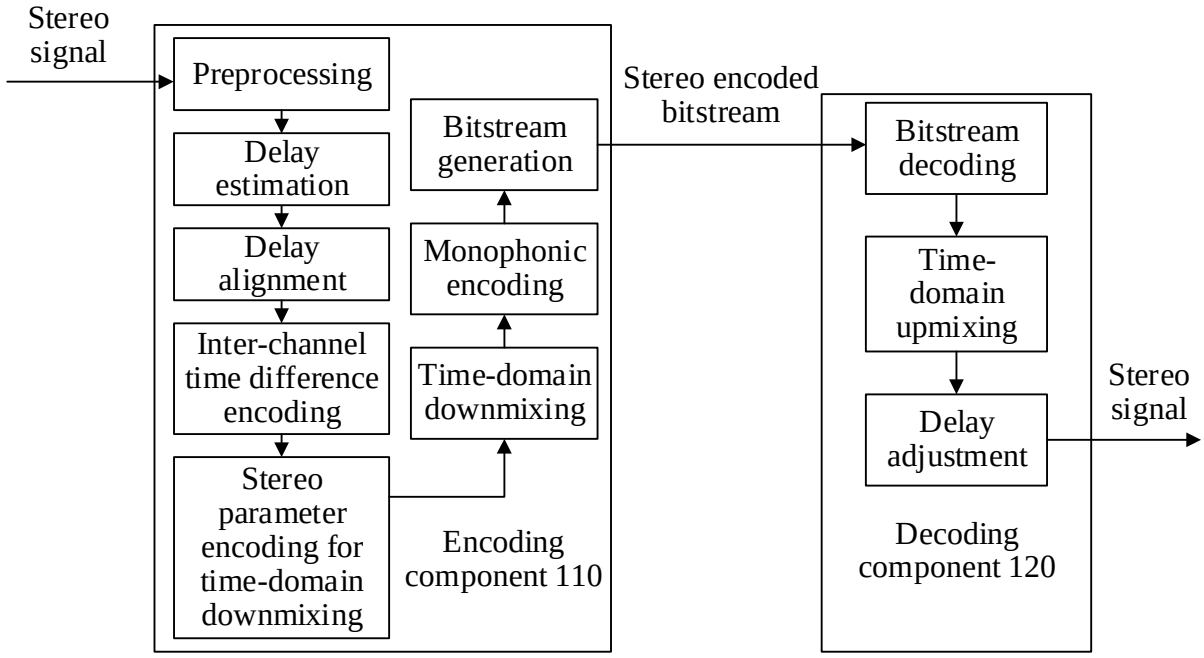
Stereo signal
Preprocessing
Delay estimation
Delay alignment
Inter-channel time difference encoding
Stereo parameter encoding for time-domain downmixing
Time-domain downmixing
Monophonic encoding
Bitstream generation
Encoding component 110
Stereo encoded bitstream
Bitstream decoding
Time-domain upmixing
Delay adjustment
Stereo signal
Decoding component 120

FIG. 1

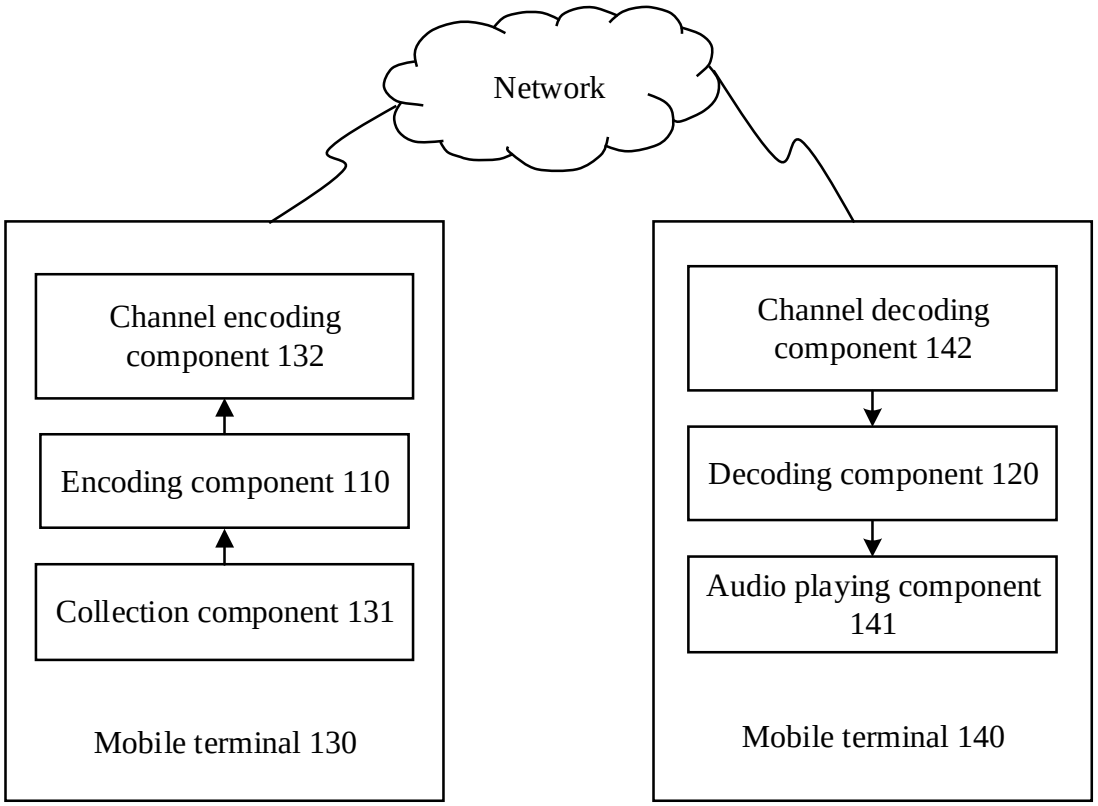
Network
Channel encoding component 132
Encoding component 110
Collection component 131
Mobile terminal 130
Channel decoding component 142
Decoding component 120
Audio playing component 141
Mobile terminal 140

FIG. 2

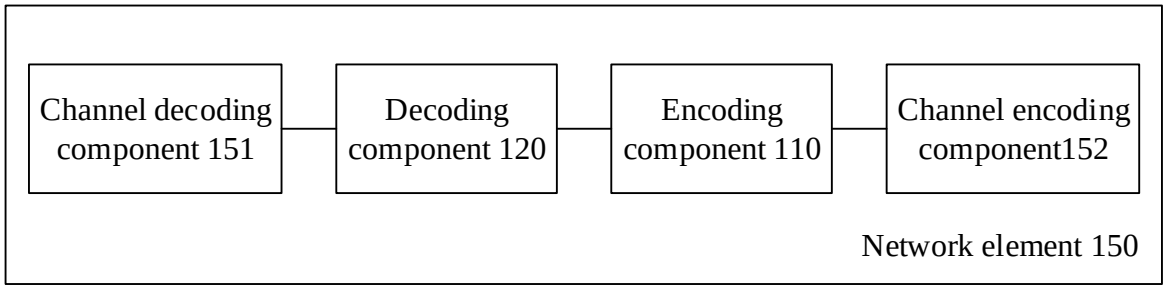
Channel decoding component 151
Decoding component 120
Encoding component 110
Channel encoding component152
Network element 150

FIG. 3

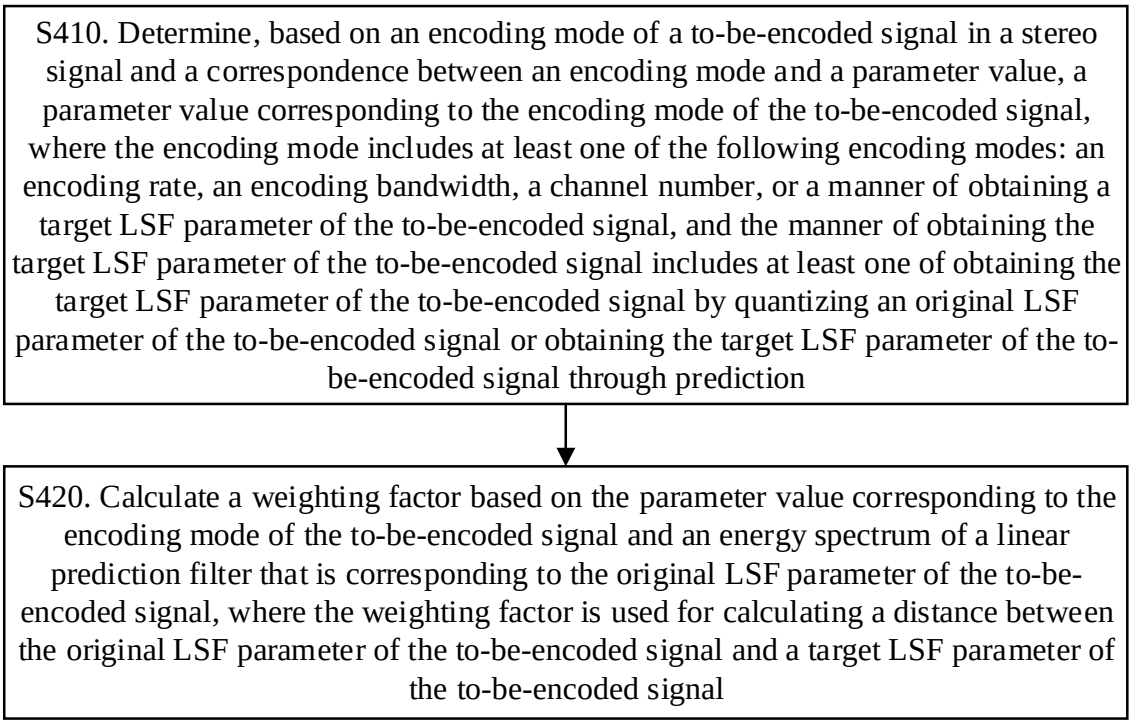
S410. Determine, based on an encoding mode of a to-be-encoded signal in a stereo signal and a correspondence between an encoding mode and a parameter value, a parameter value corresponding to the encoding mode of the to-be-encoded signal, where the encoding mode includes at least one of the following encoding modes: an encoding rate, an encoding bandwidth, a channel number, or a manner of obtaining a target LSF parameter of the to-be-encoded signal, and the manner of obtaining the target LSF parameter of the to-be-encoded signal includes at least one of obtaining the target LSF parameter of the to-be-encoded signal by quantizing an original LSF parameter of the to-be-encoded signal or obtaining the target LSF parameter of the to-be-encoded signal through prediction
S420. Calculate a weighting factor based on the parameter value corresponding to the encoding mode of the to-be-encoded signal and an energy spectrum of a linear prediction filter that is corresponding to the original LSF parameter of the to-be-encoded signal, where the weighting factor is used for calculating a distance between the original LSF parameter of the to-be-encoded signal and a target LSF parameter of the to-be-encoded signal

FIG. 4

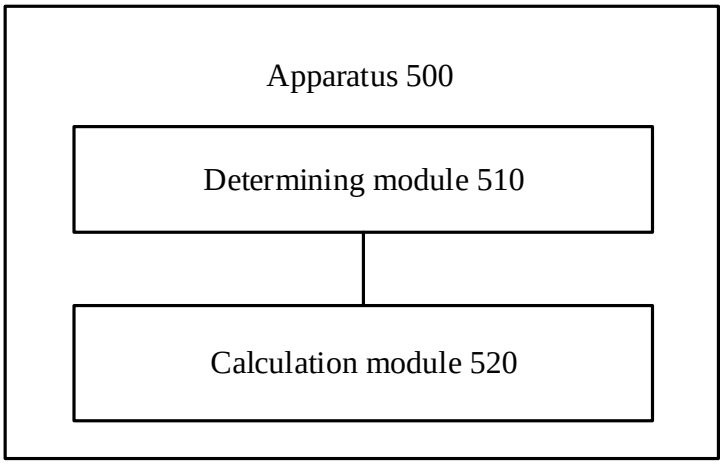
Apparatus 500
Determining module 510
Calculation module 520

FIG. 5

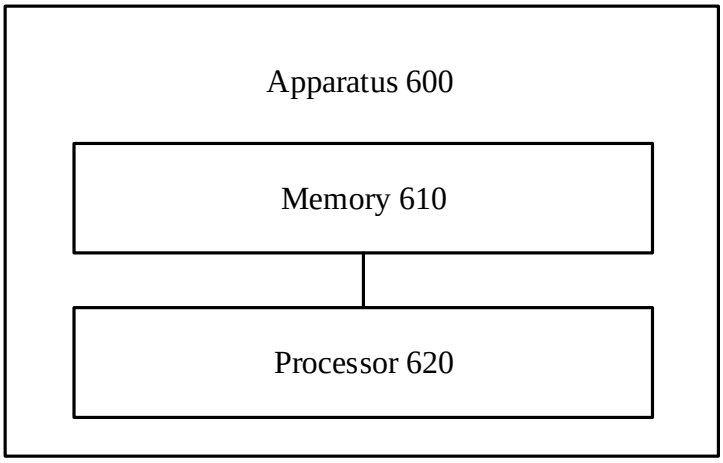
Apparatus 600
Memory 610
Processor 620

FIG. 6