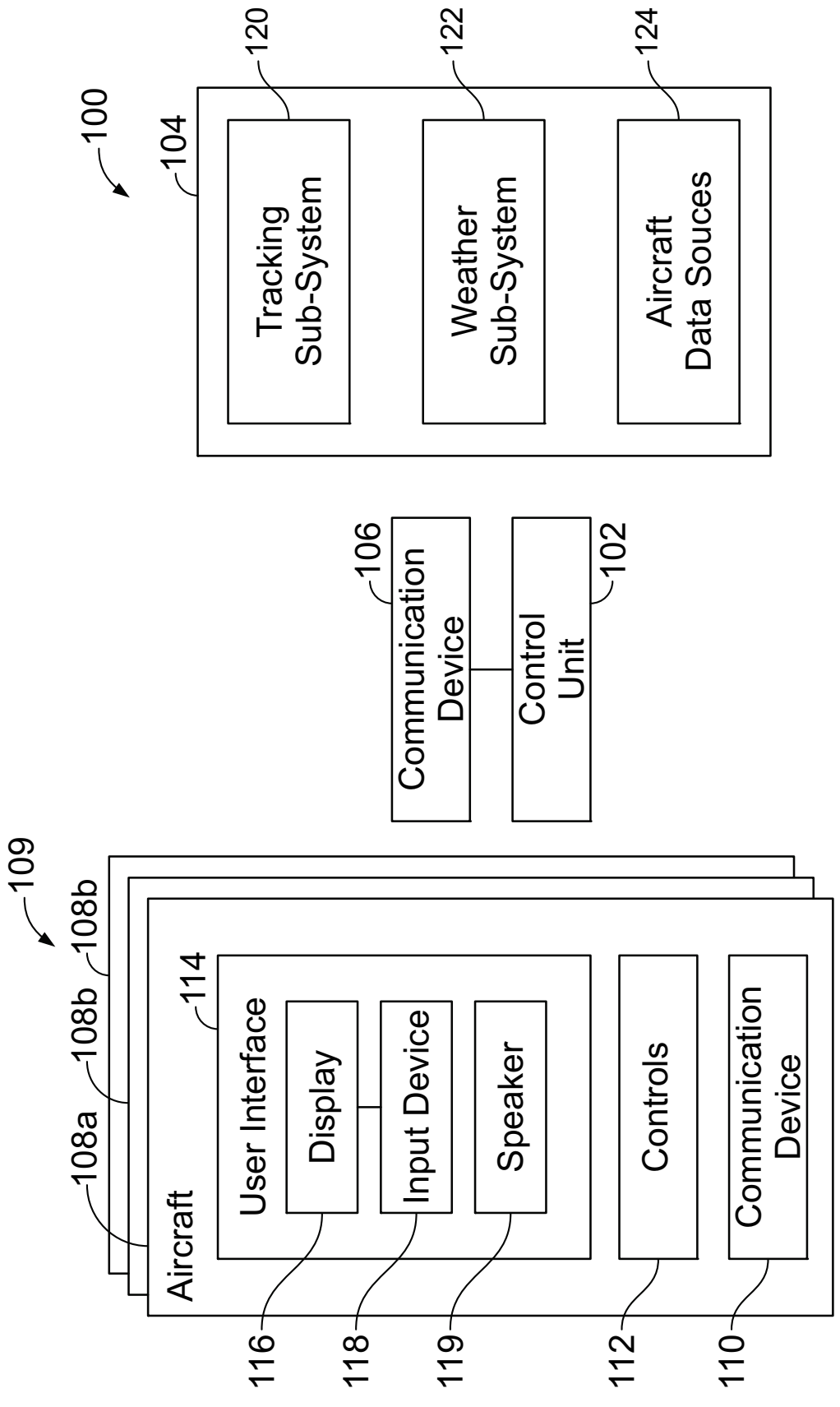
100
104
120
122
124
Tracking Sub-System
Weather Sub-System
Aircraft Data Souces
106
Communication Device
Control Unit
102
109
108a
108b
108b
Aircraft
114
User Interface
Display
Input Device
Speaker
Controls
Communication Device
116
118
119
112
110

FIG. 1

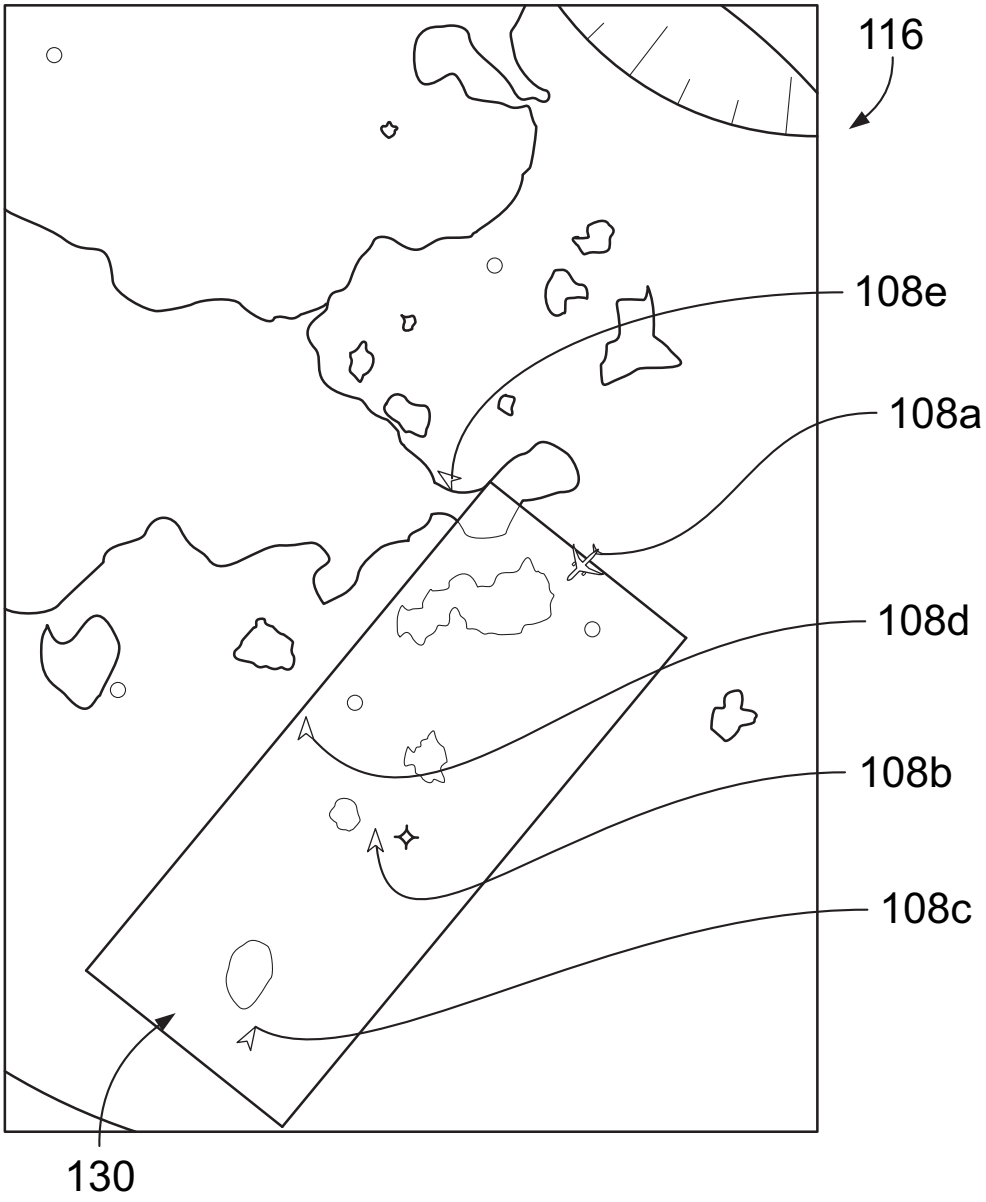

FIG. 2

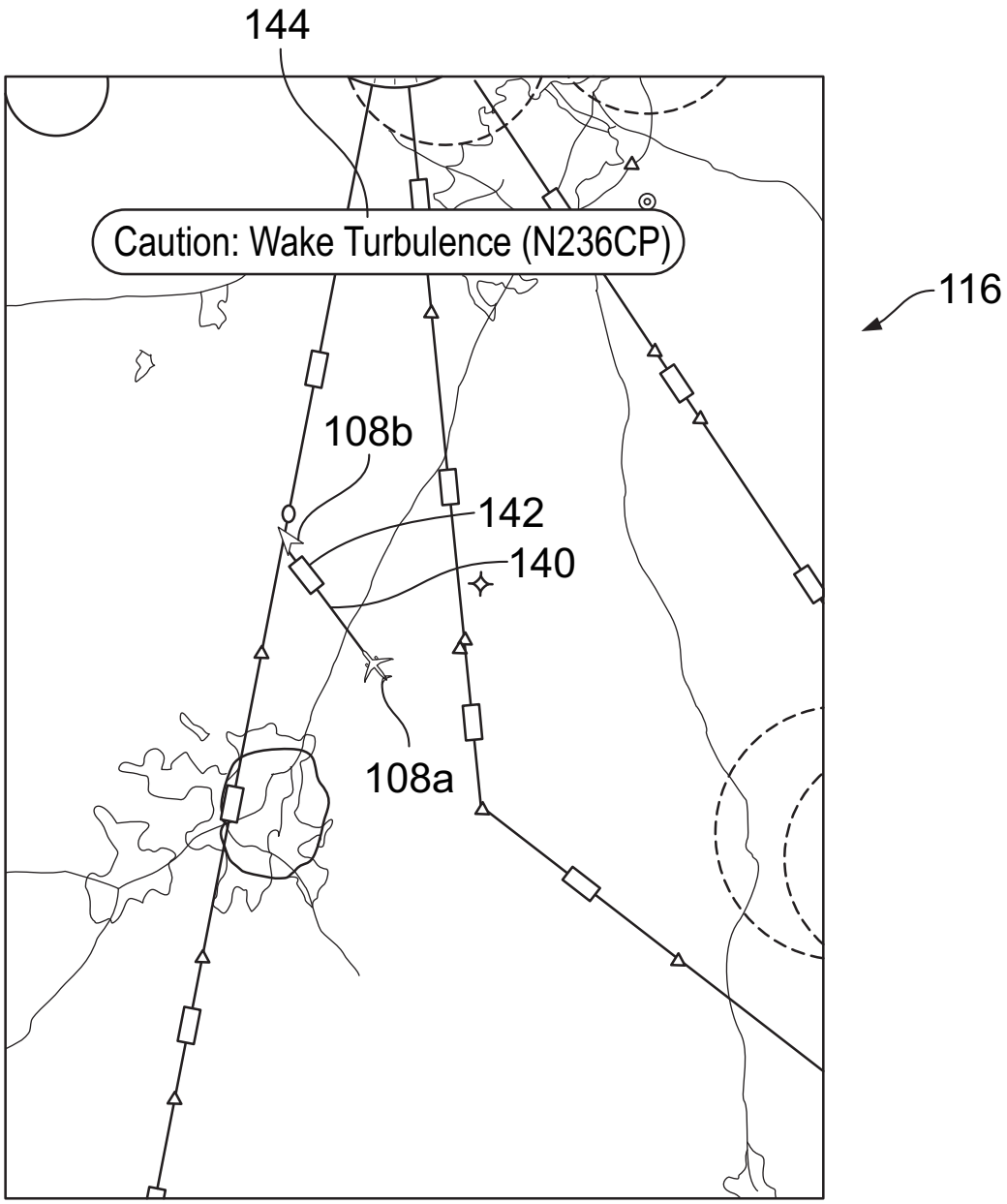

FIG. 3

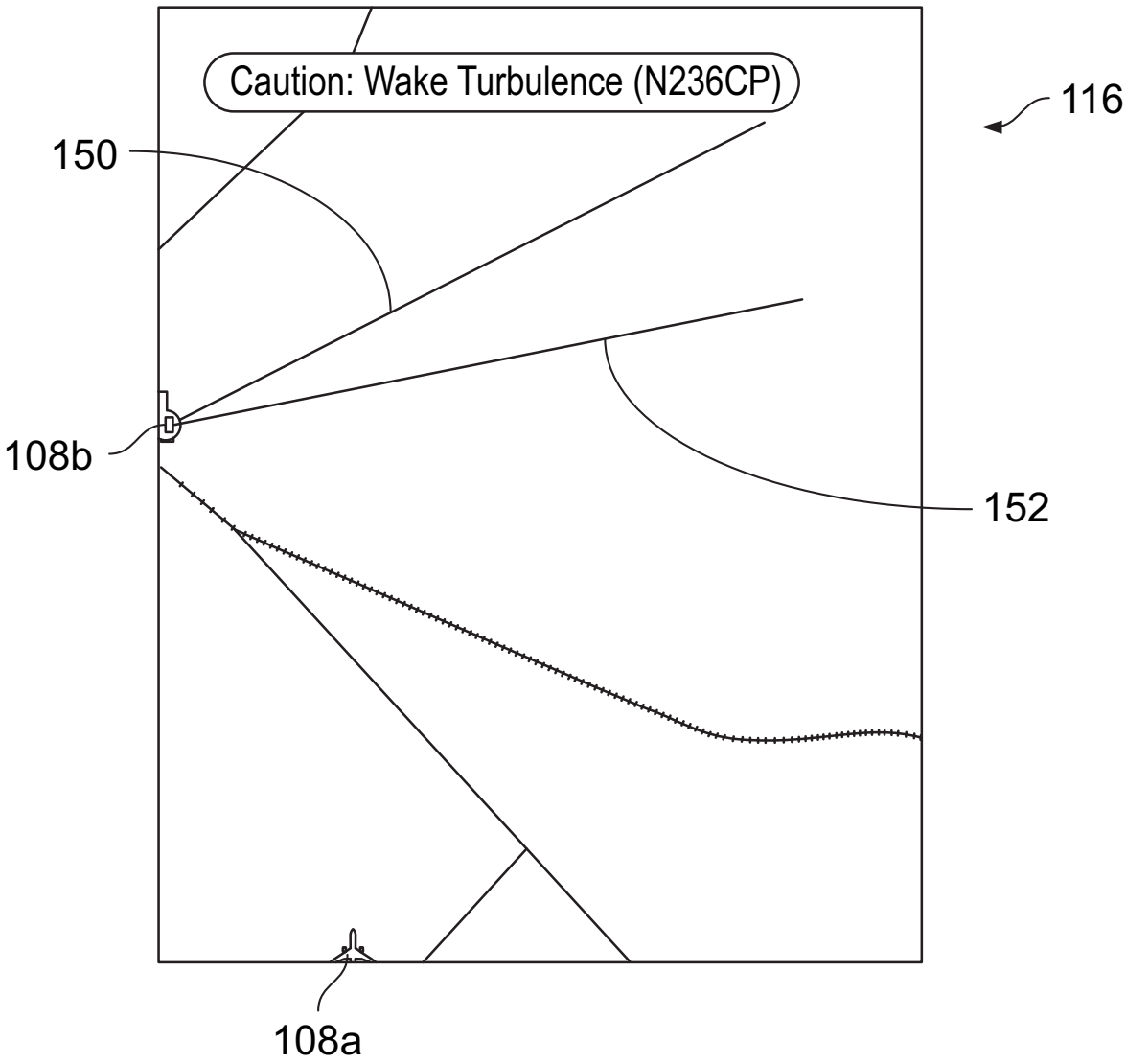

FIG. 4

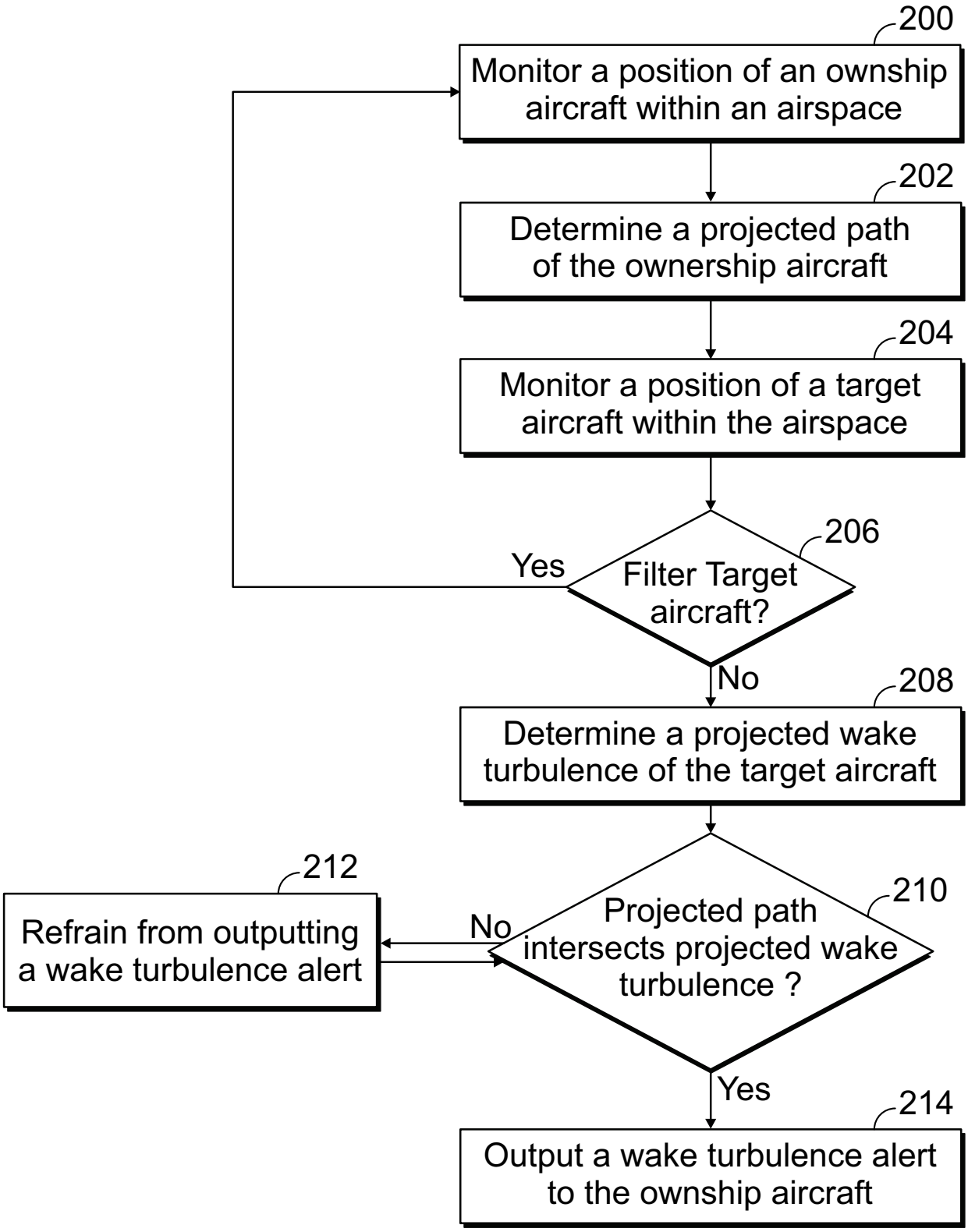
200
Monitor a position of an ownship aircraft within an airspace
202
Determine a projected path of the ownership aircraft
204
Monitor a position of a target aircraft within the airspace
206
Filter Target aircraft?
Yes
No
208
Determine a projected wake turbulence of the target aircraft
210
Projected path intersects projected wake turbulence ?
No
212
Refrain from outputting a wake turbulence alert
Yes
214
Output a wake turbulence alert to the ownship aircraft

FIG. 5

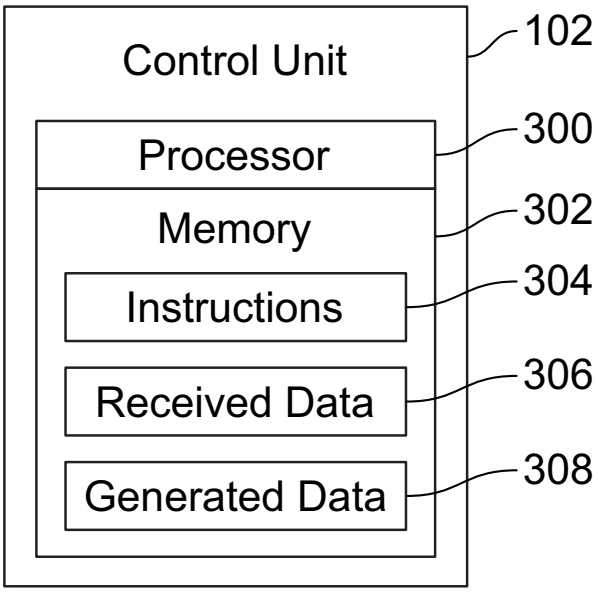
Control Unit
102
Processor
300
Memory
302
Instructions
304
Received Data
306
Generated Data
308

FIG. 6

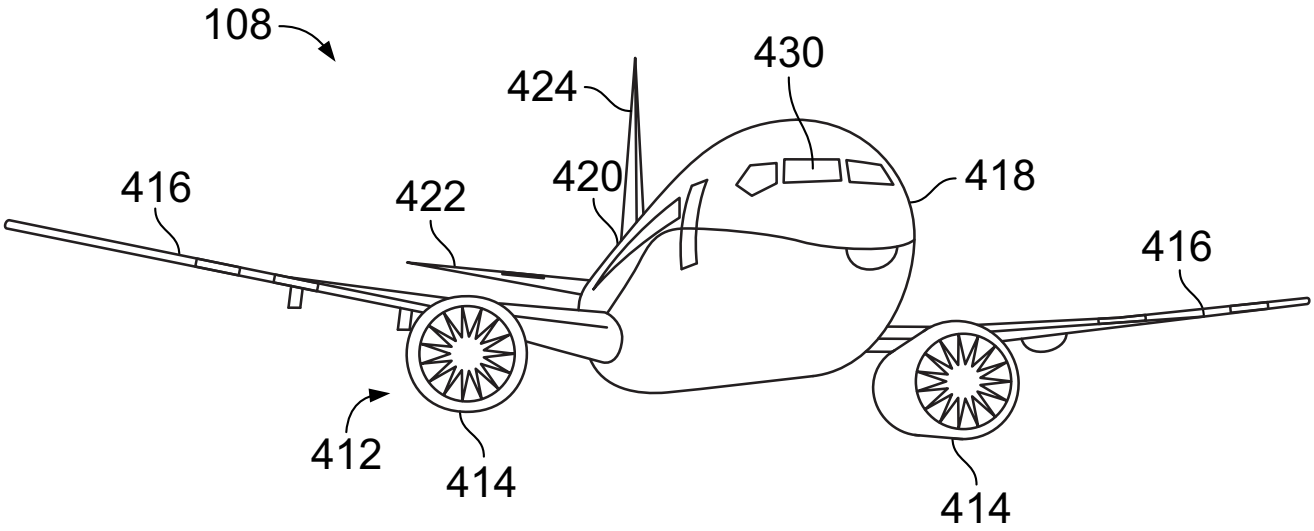
108
424
430
420
418
416
422
416
412
414
414

FIG. 7