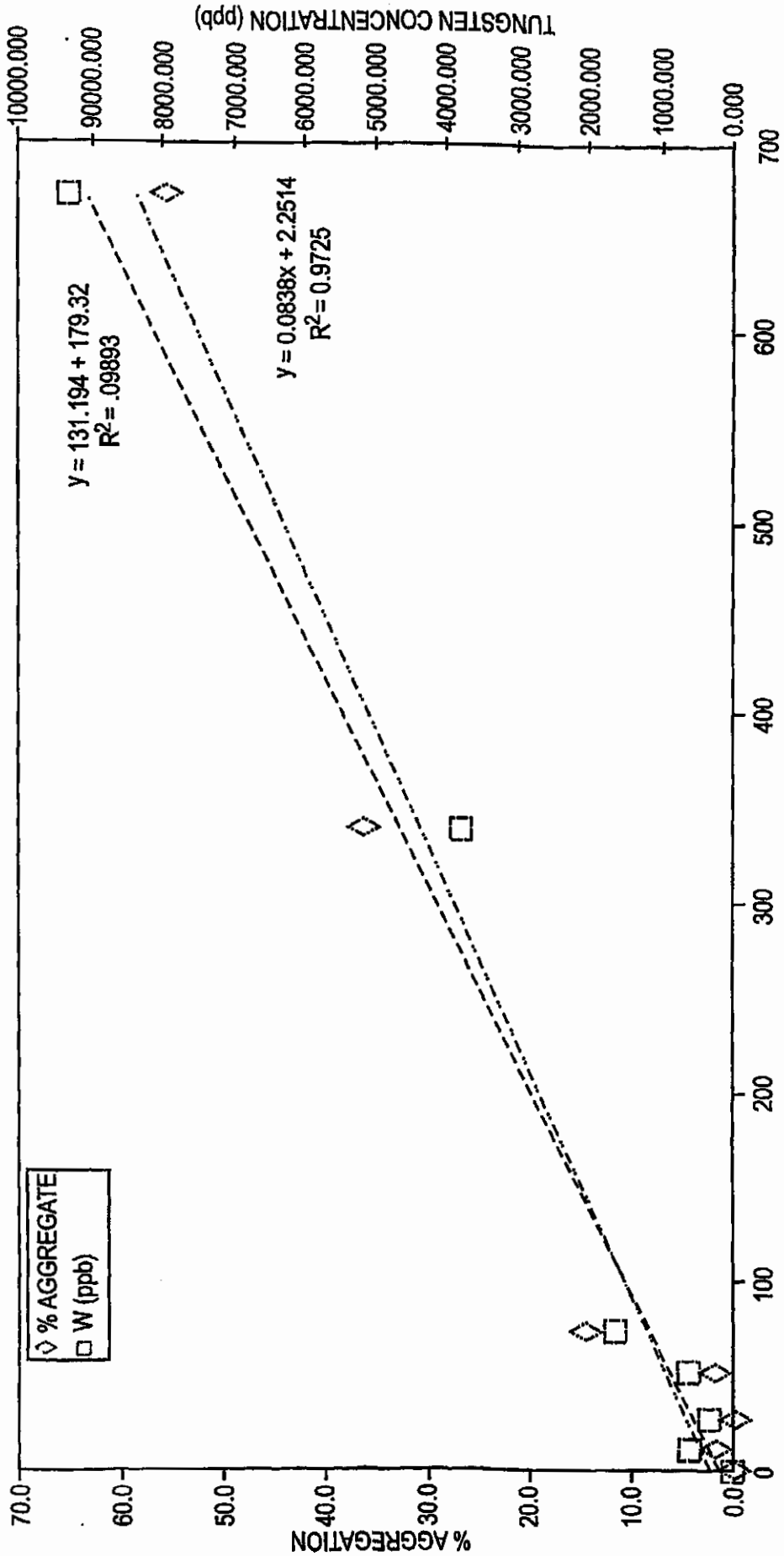
TUNGSTEN CONCENTRATION (ppb)
10000.000
9000.000
8000.000
7000.000
6000.000
5000.000
4000.000
3000.000
2000.000
1000.000
0.000
y = 131.194 + 179.32
R2= .09893
y = 0.0838x + 2.2514
R2= 0.9725
◇ % AGGREGATE
□ W (ppb)
70.0
60.0
50.0
40.0
30.0
20.0
10.0
0.0
% AGGREGATION
0
100
200
300
400
500
600
700
TIME (HOURS)

FIG. 1

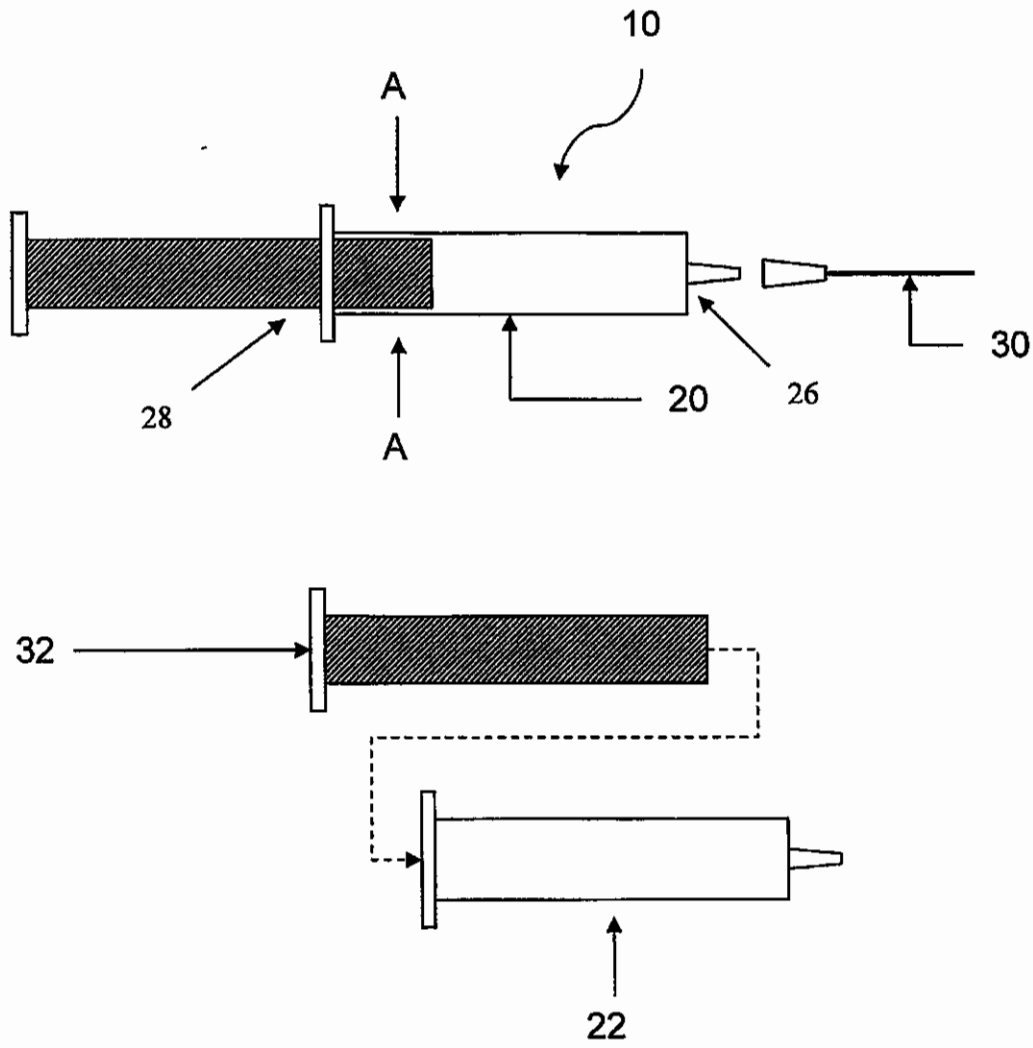

Figure 2

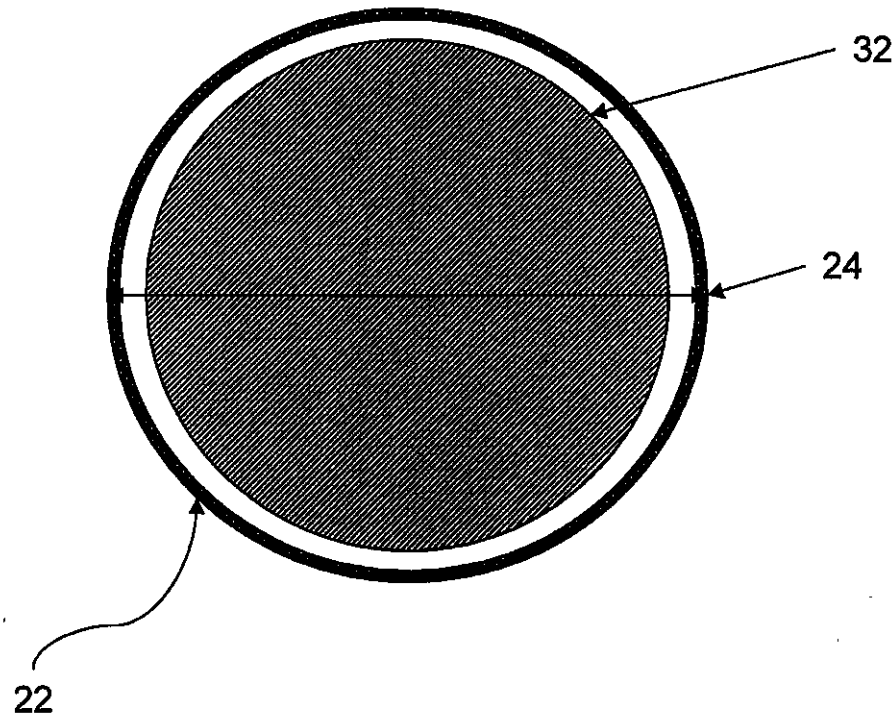

Figure 3

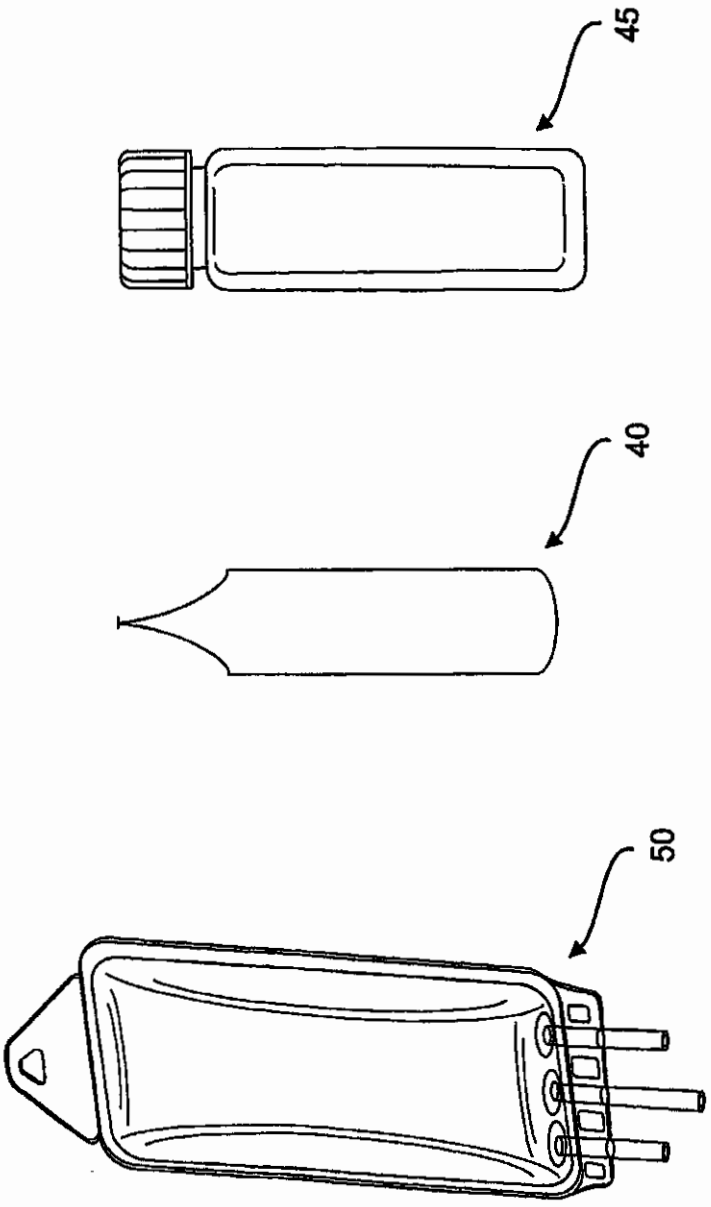

FIG. 4