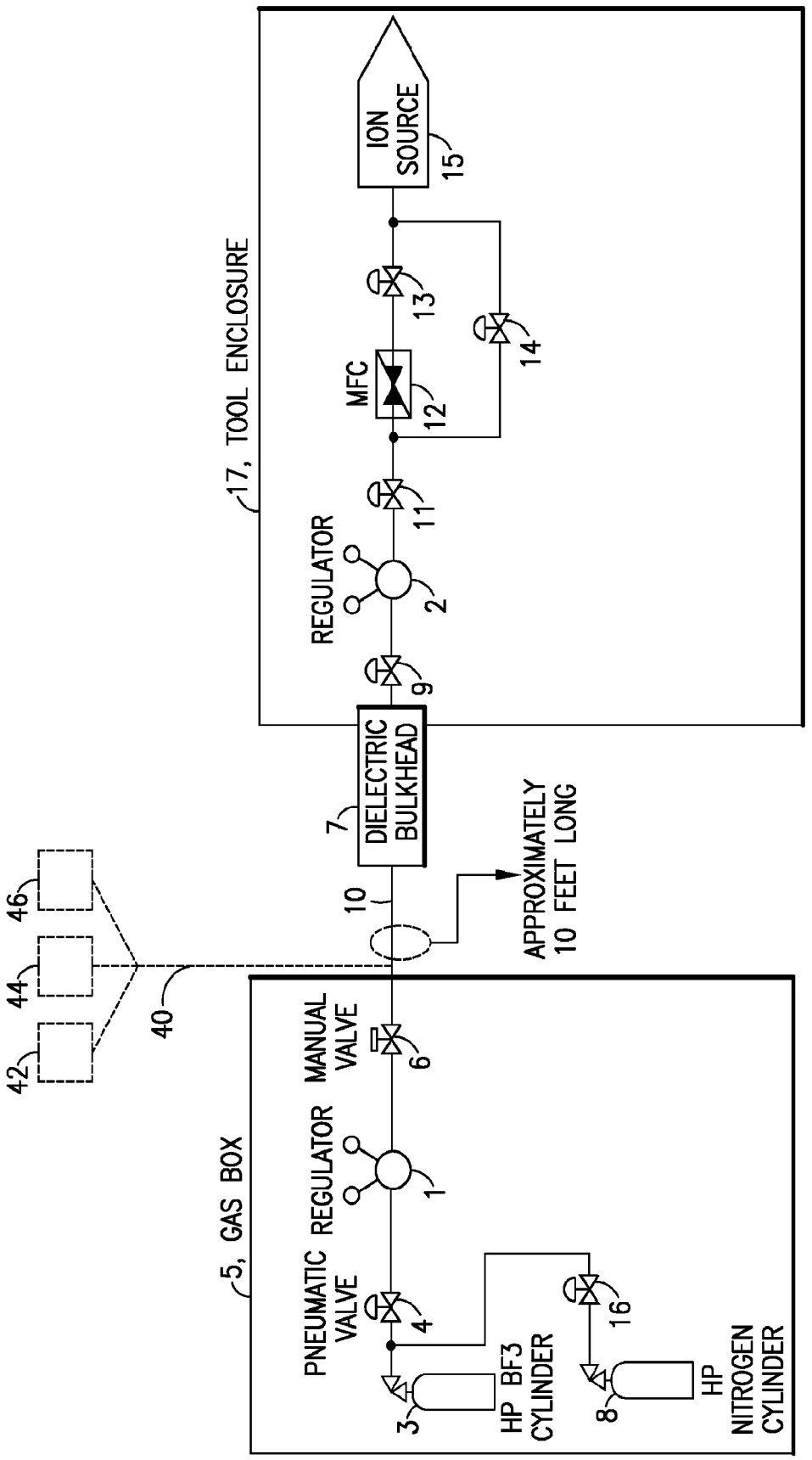
ION SOURCE
15
17, TOOL ENCLOSURE
MFC
12
13
14
REGULATOR
2
11
9
DIELECTRIC BULKHEAD
7
10
APPROXIMATELY 10 FEET LONG
46
44
42
40
5, GAS BOX
MANUAL VALVE
6
REGULATOR
1
PNEUMATIC VALVE
4
3
HP BF3 CYLINDER
16
8
HP NITROGEN CYLINDER

FIG. 1

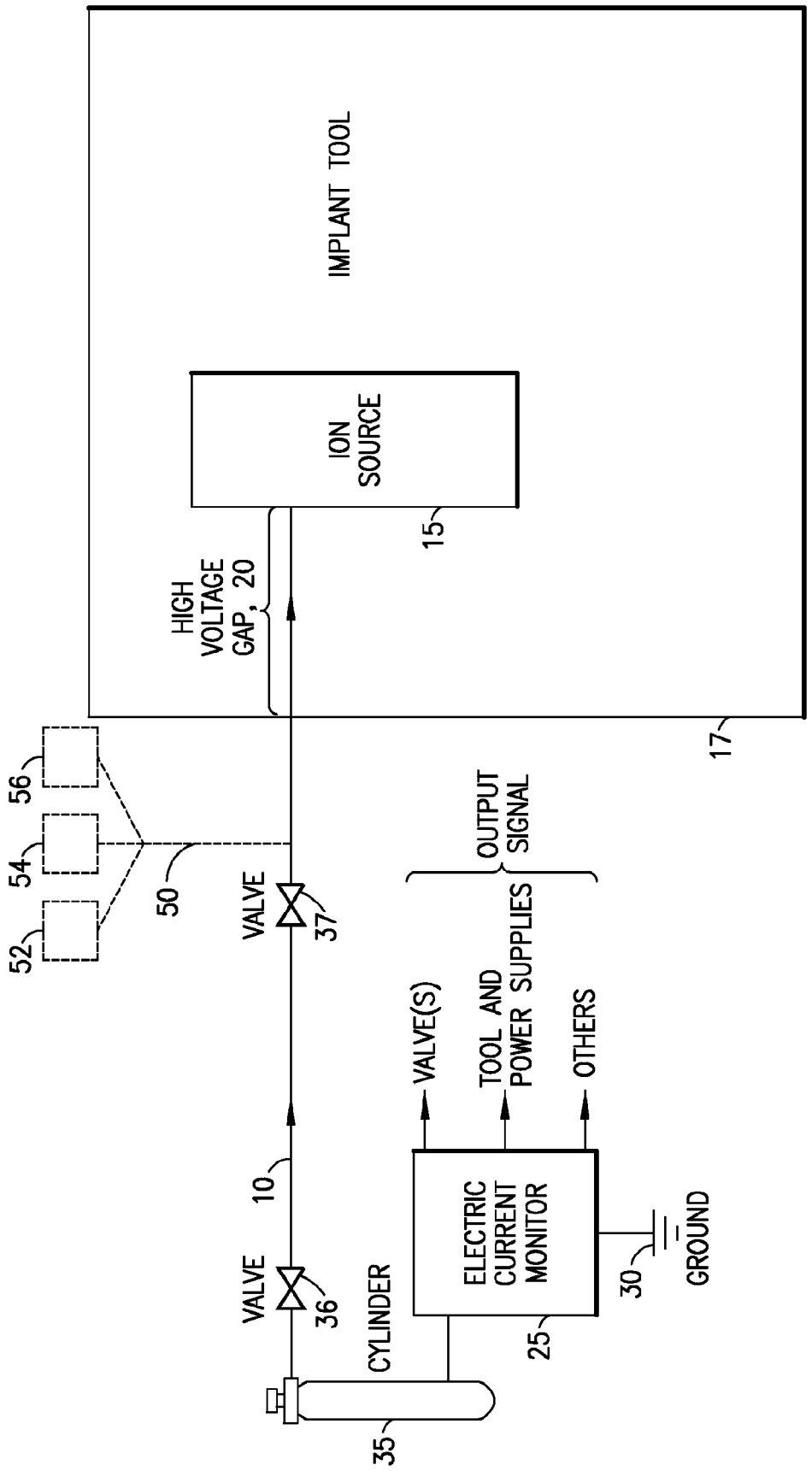
IMPLANT TOOL
ION SOURCE
15
HIGH VOLTAGE GAP, 20
17
56
54
52
50
VALVE
37
OUTPUT SIGNAL
VALVE(S)
TOOL AND POWER SUPPLIES
OTHERS
10
VALVE
36
CYLINDER
ELECTRIC CURRENT MONITOR
25
30
GROUND
35

FIG.2

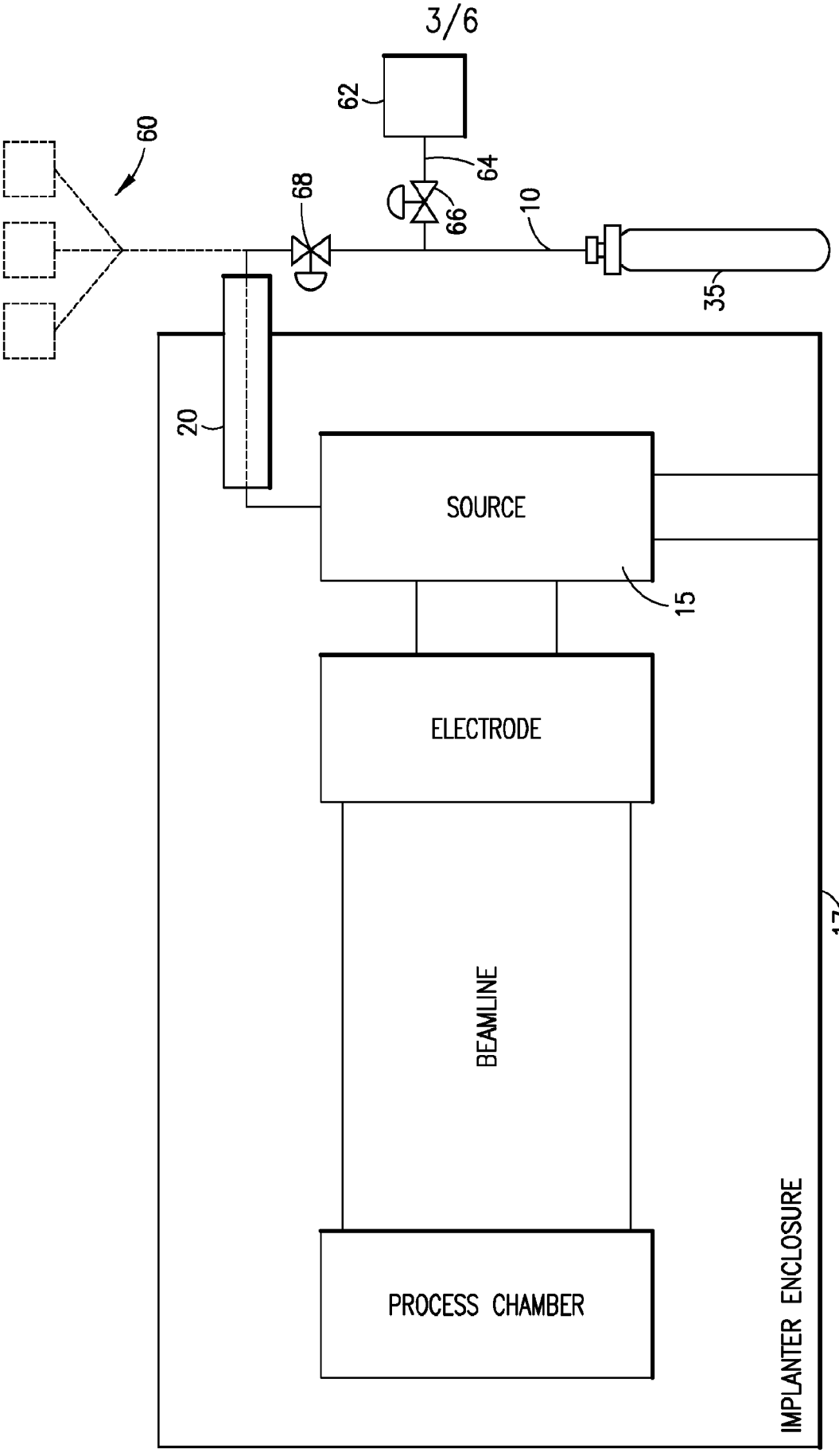
62
64
60
68
66
10
35
20
SOURCE
15
ELECTRODE
BEAMLINE
PROCESS CHAMBER
17
IMPLANTER ENCLOSURE

FIG.3

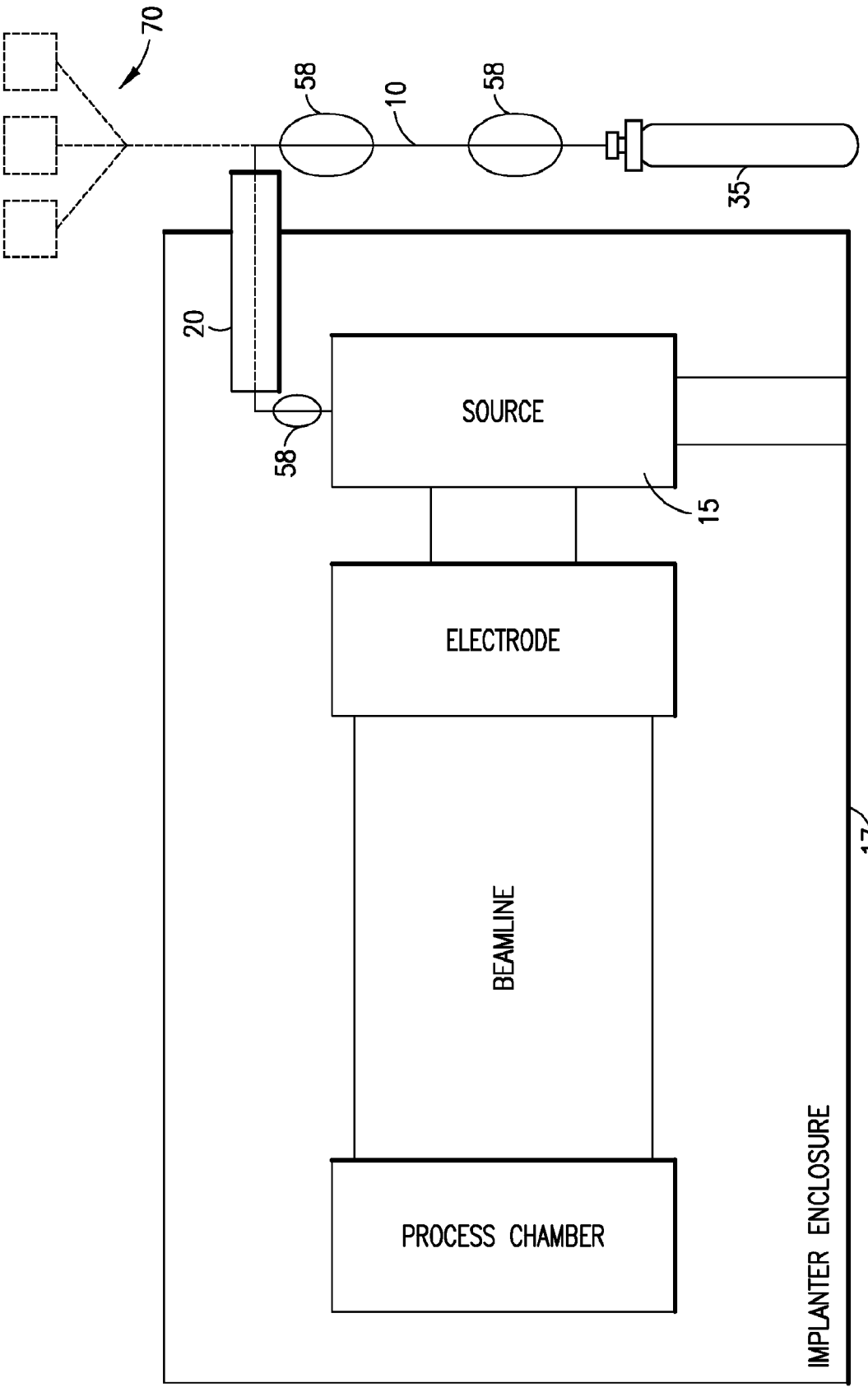
70
58
10
58
35
20
58
SOURCE
15
ELECTRODE
BEAMLINE
PROCESS CHAMBER
17
IMPLANTER ENCLOSURE

FIG.4

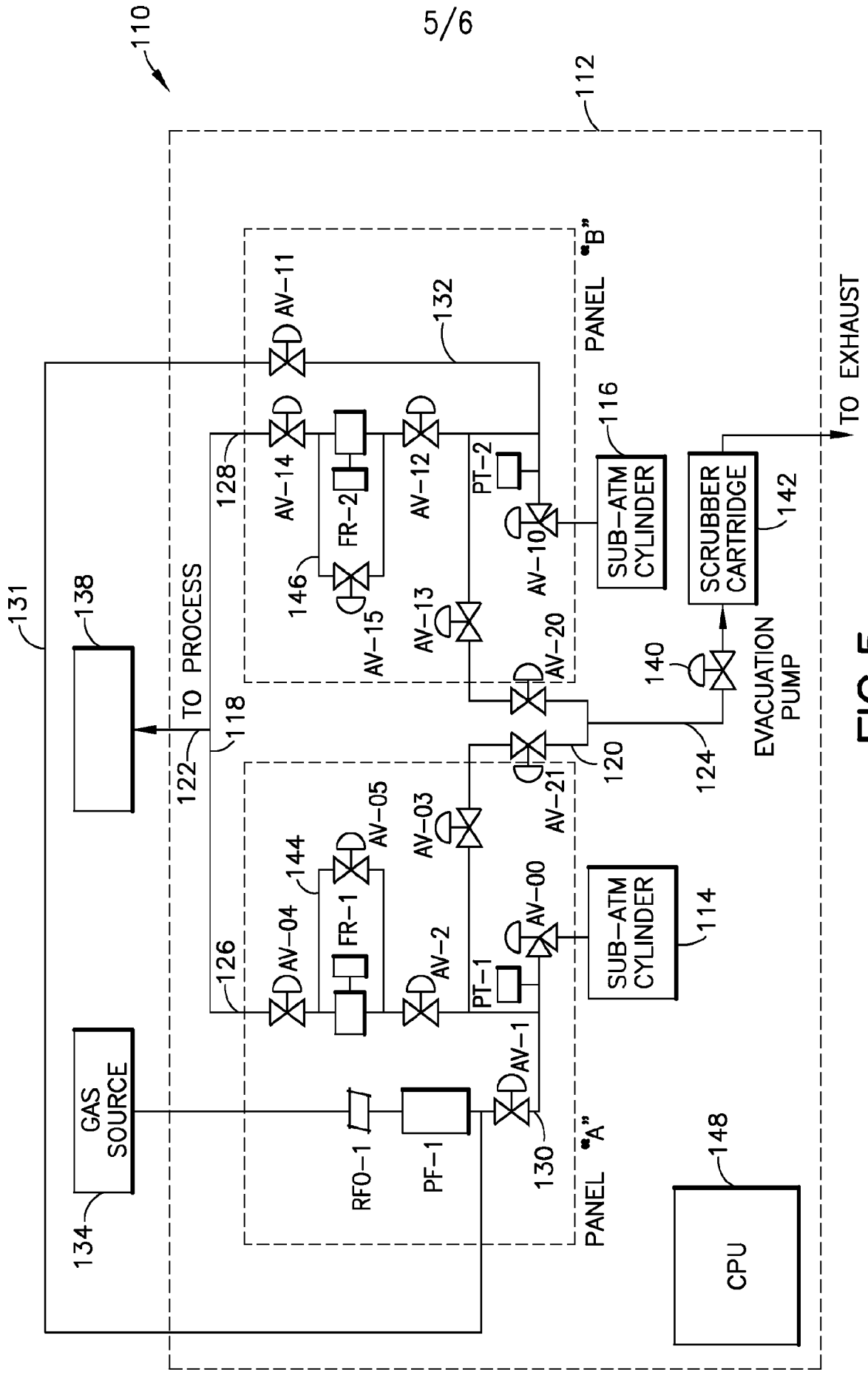
110
112
131
138
TO PROCESS
118
122
128
AV-14
AV-11
132
PANEL "B"
FR-2
AV-12
PT-2
AV-10
116
SUB-ATM CYLINDER
SCRUBBER CARTRIDGE
142
TO EXHAUST
146
AV-15
AV-13
AV-20
140
EVACUATION PUMP
120
124
AV-21
AV-05
AV-03
144
FR-1
AV-04
AV-2
AV-00
SUB-ATM CYLINDER
114
126
PT-1
AV-1
GAS SOURCE
134
RFO-1
PF-1
130
PANEL "A"
148
CPU

FIG.5

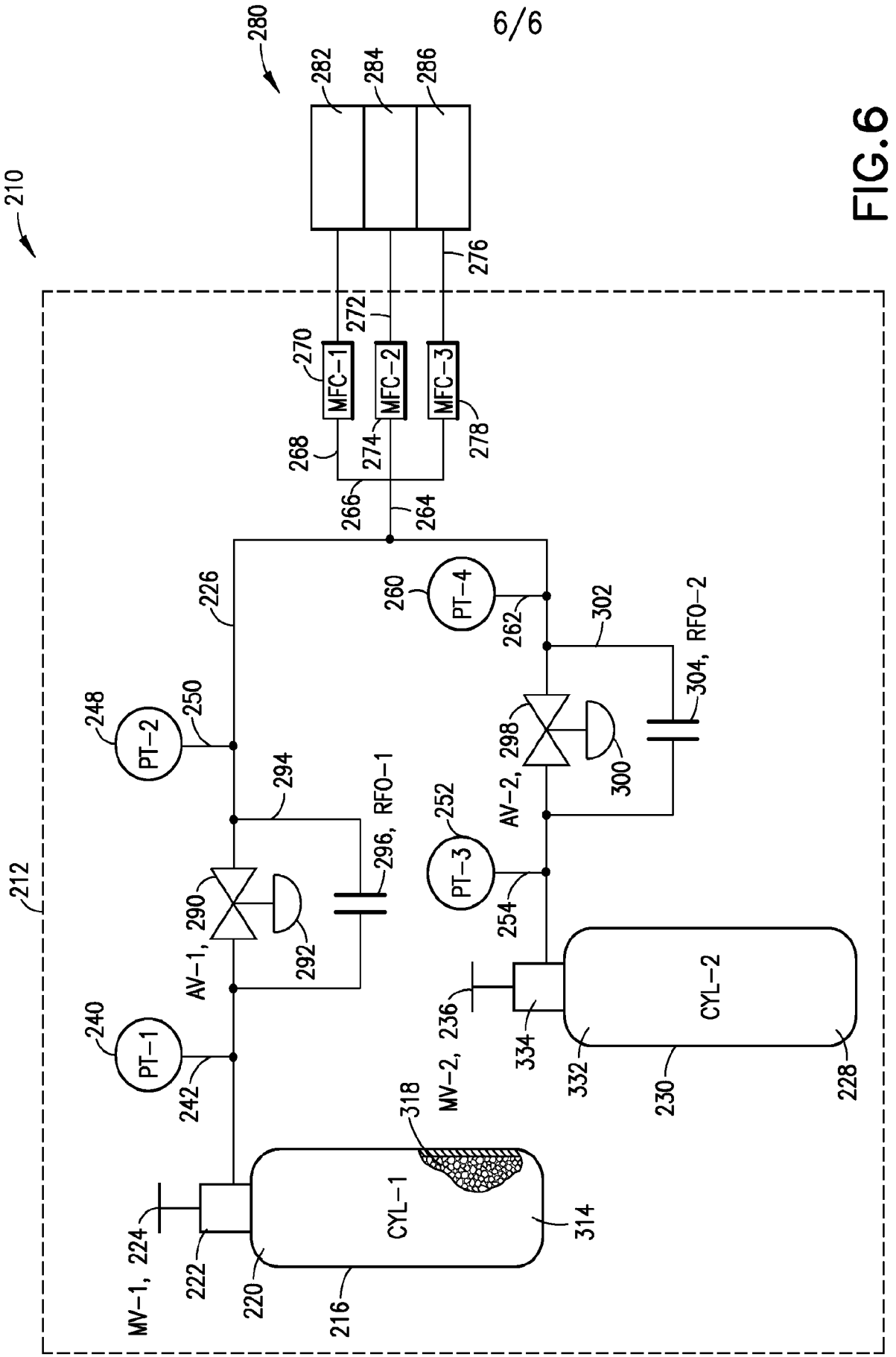
280
282
284
286
210
276
272
270
MFC-1
MFC-2
MFC-3
268
274
278
266
264
226
260
PT-4
262
302
304, RFO-2
248
PT-2
250
294
296, RFO-1
AV-2, 298
300
252
PT-3
254
212
AV-1, 290
292
240
PT-1
242
MV-2, 236
334
332
CYL-2
230
228
318
CYL-1
314
MV-1, 224
222
220
216

FIG.6