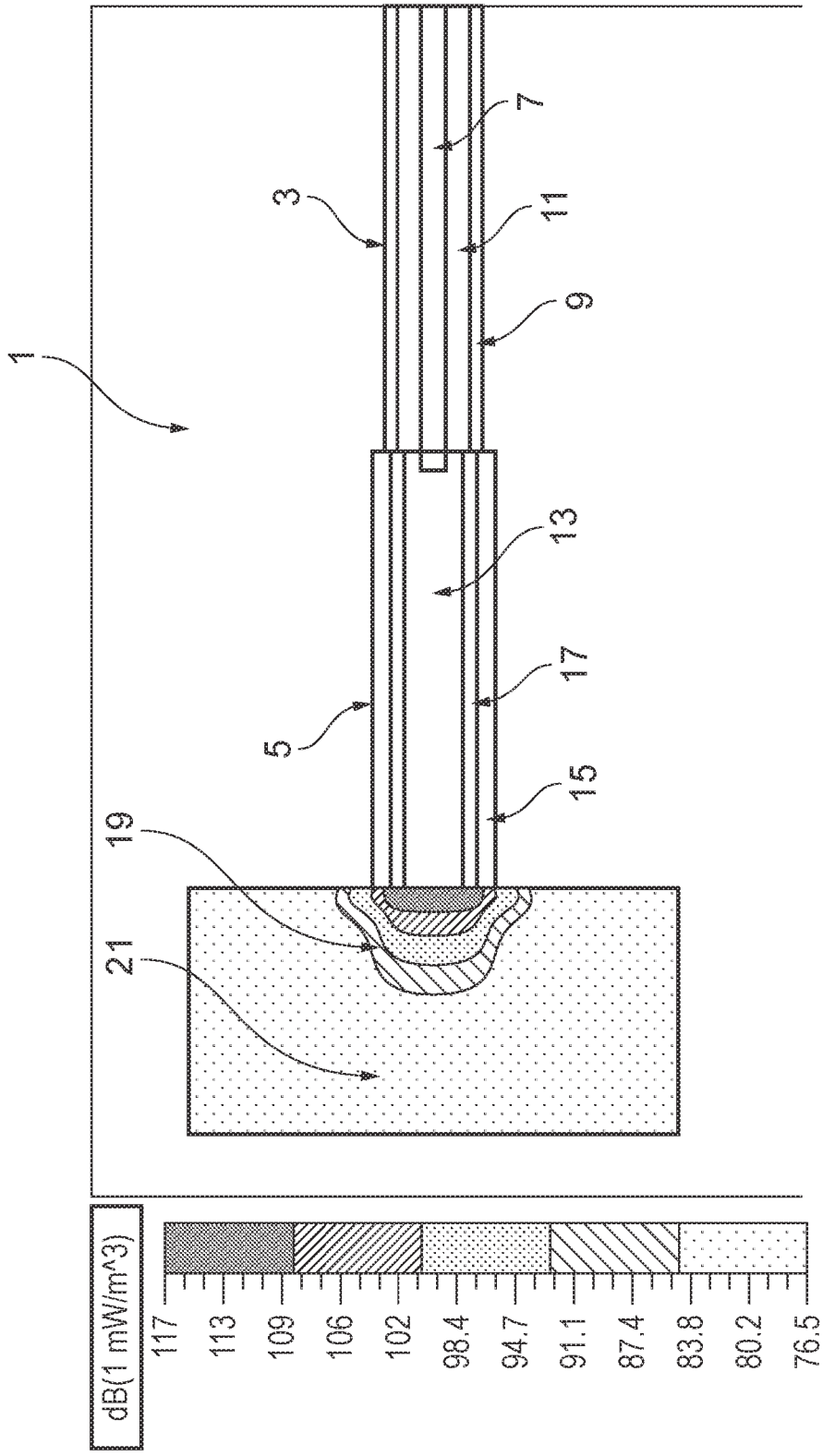
1
3
5
7
9
11
13
15
17
19
21
dB(1 mW/m^3)
117
113
109
106
102
98.4
94.7
91.1
87.4
83.8
80.2
76.5

FIG. 1

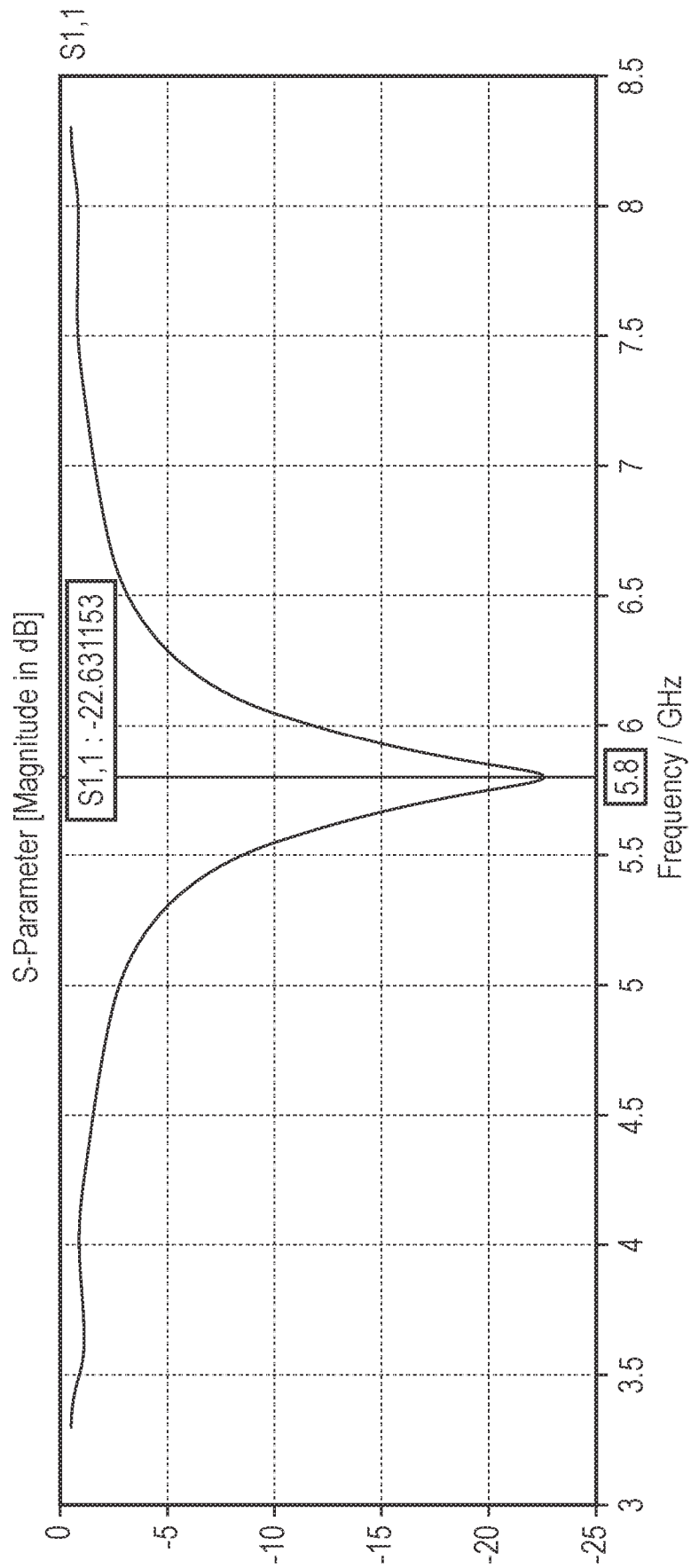
S1,1
S-Parameter [Magnitude in dB]
S1,1 : -22.631153
5.8
Frequency / GHz
0
-5
-10
-15
-20
-25
3
3.5
4
4.5
5
5.5
6
6.5
7
7.5
8
8.5

FIG. 2

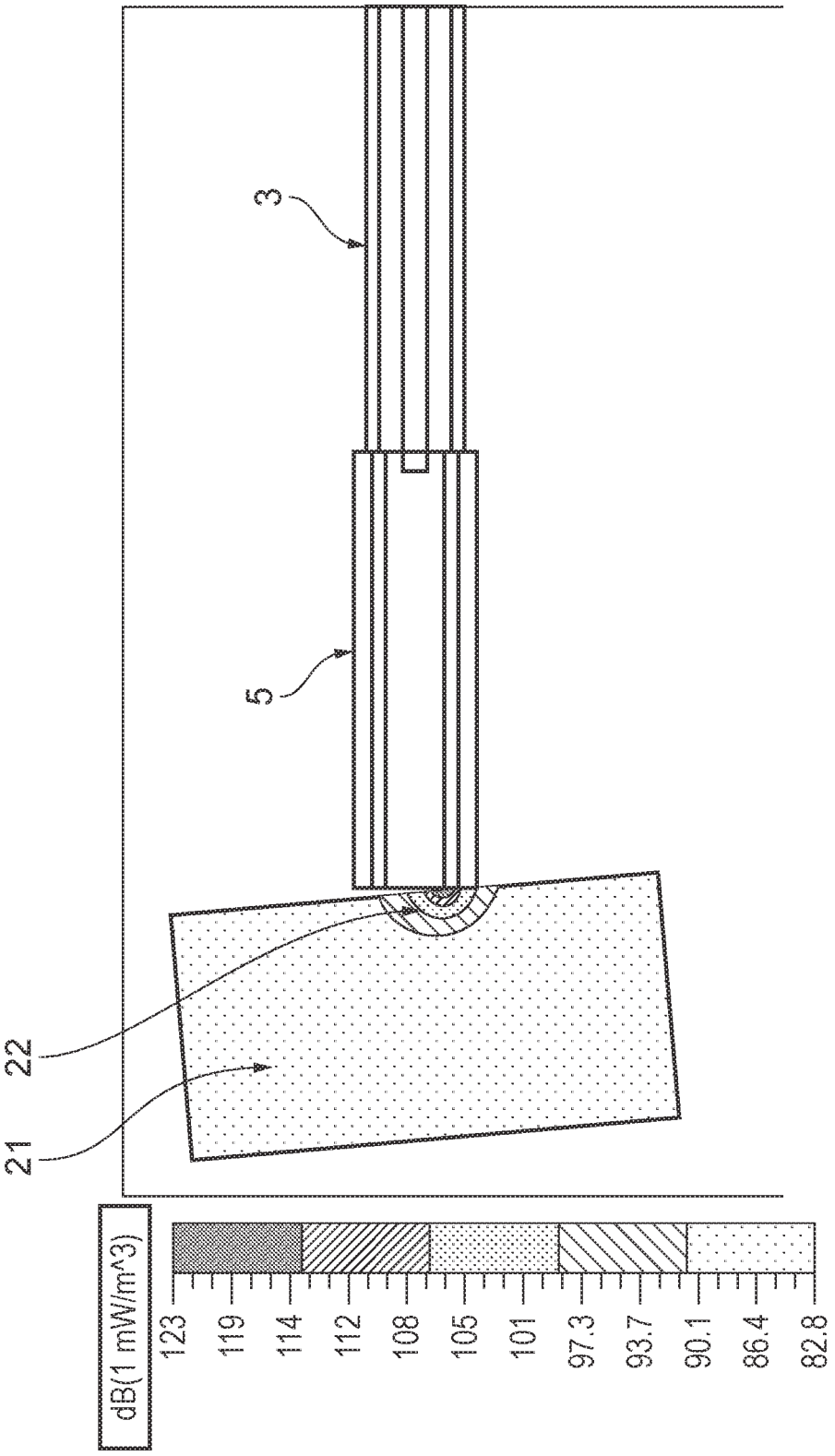

FIG. 3

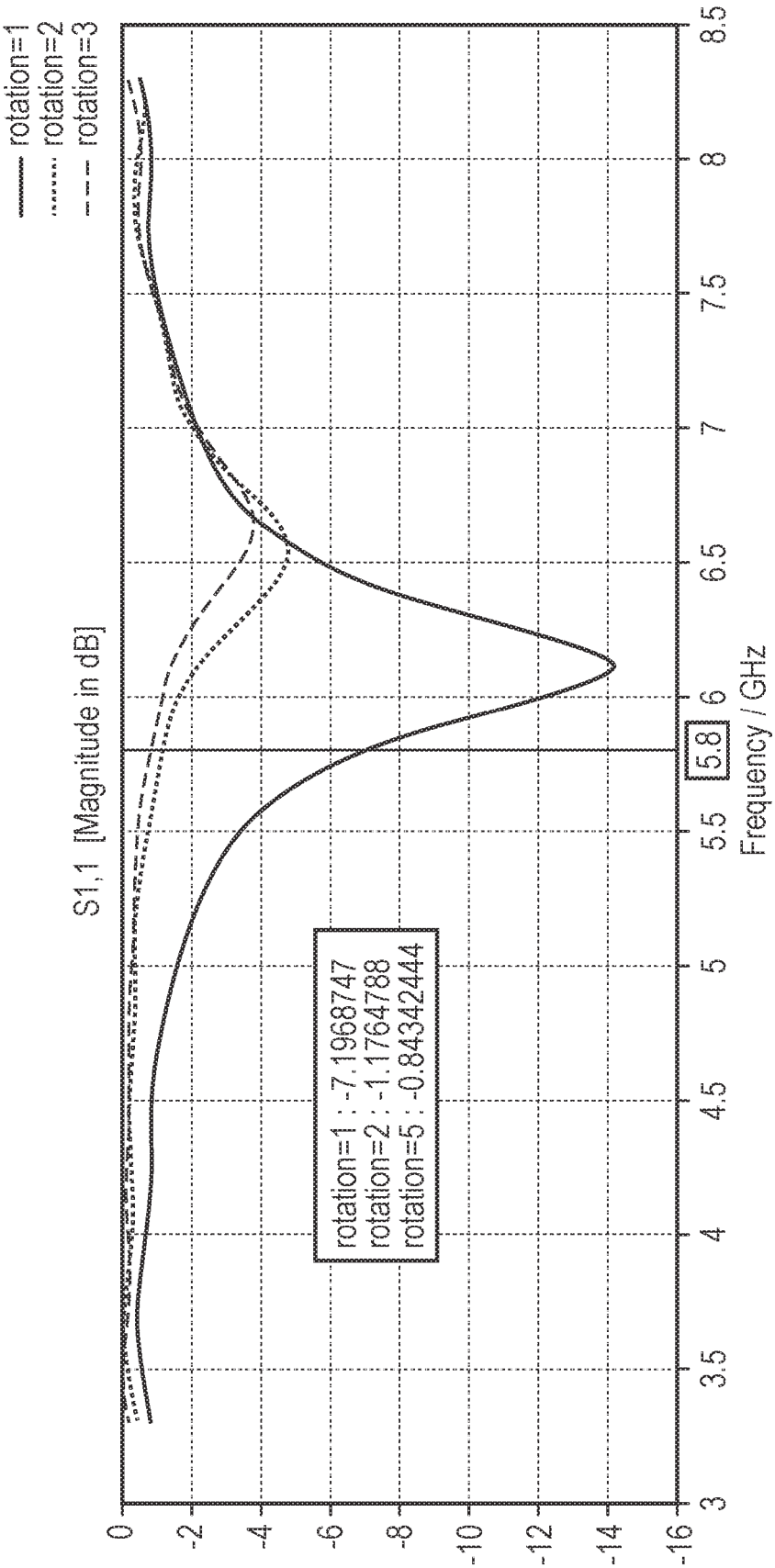
rotation=1
rotation=2
rotation=3
S1,1 [Magnitude in dB]
0
-2
-4
-6
-8
-10
-12
-14
-16
3
3.5
4
4.5
5
5.5
5.8
6
6.5
7
7.5
8
8.5
Frequency / GHz
rotation=1 : -7.1968747
rotation=2 : -1.1764788
rotation=5 : -0.84342444

FIG. 4

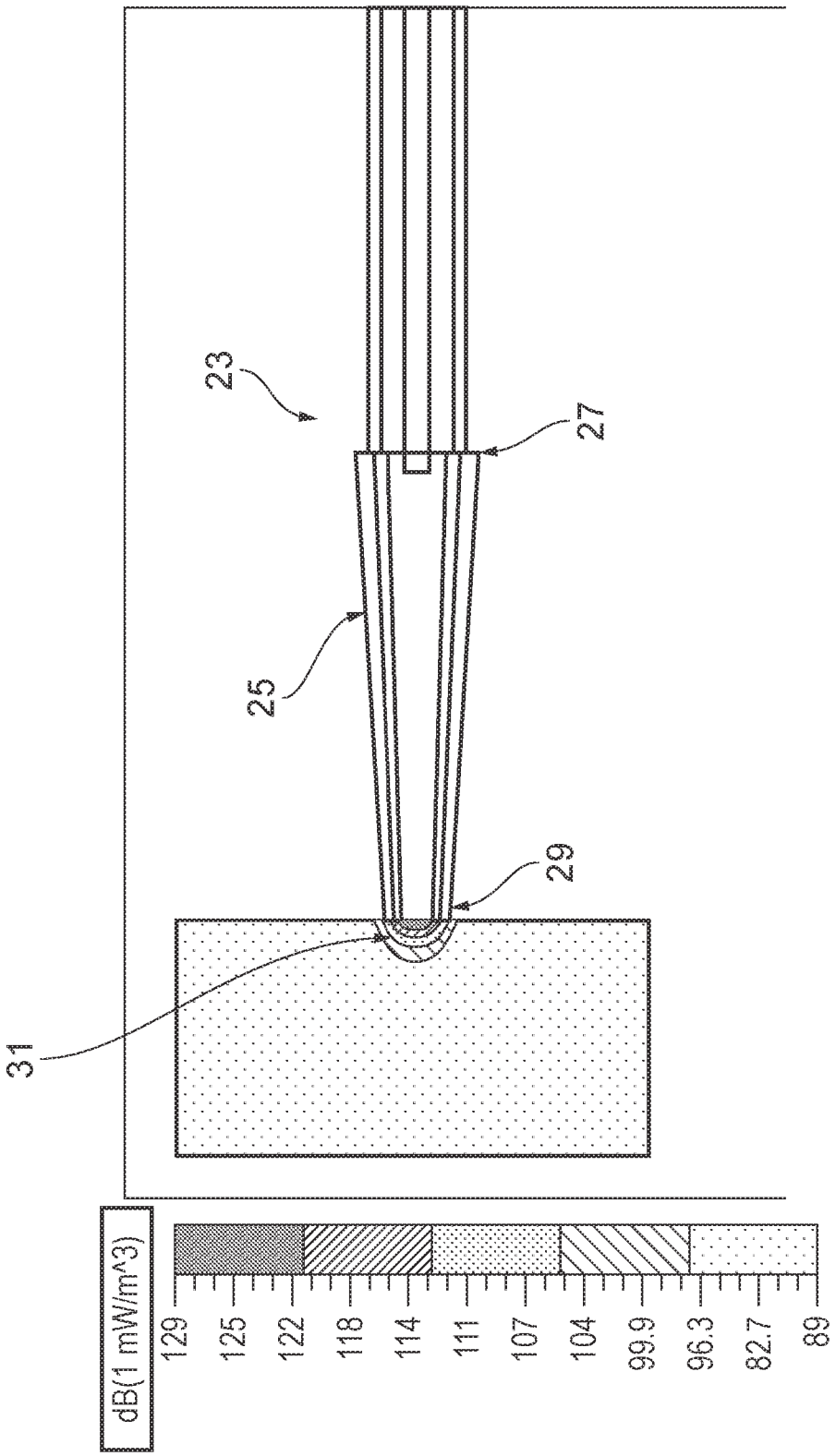
23
27
25
29
31
dB(1 mW/m^3)
129
125
122
118
114
111
107
104
99.9
96.3
82.7
89

FIG. 5

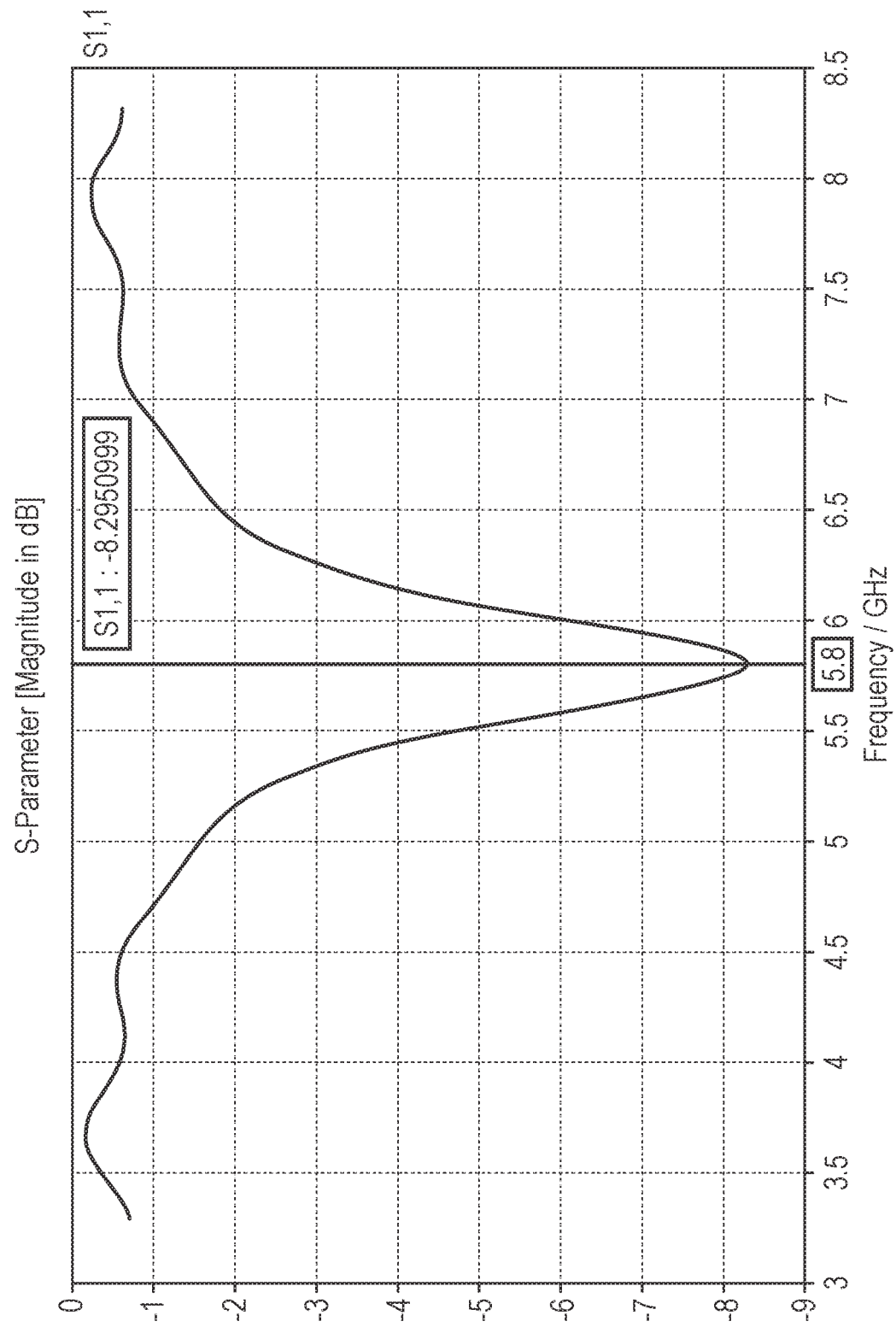
S1,1
S1,1 : -8.2950999
S-Parameter [Magnitude in dB]
0
-1
-2
-3
-4
-5
-6
-7
-8
-9
3
3.5
4
4.5
5
5.5
5.8
6
6.5
7
7.5
8
8.5
Frequency / GHz

FIG. 6

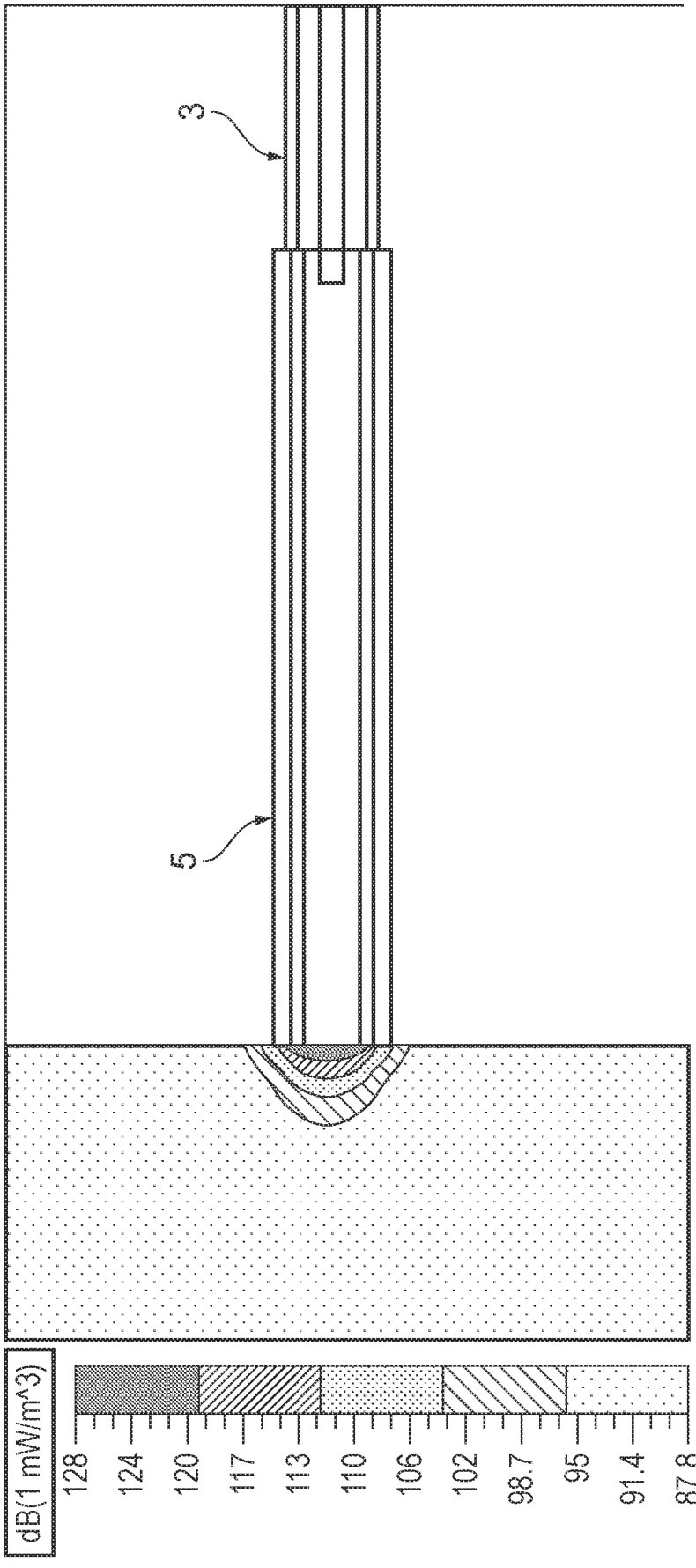

FIG. 7

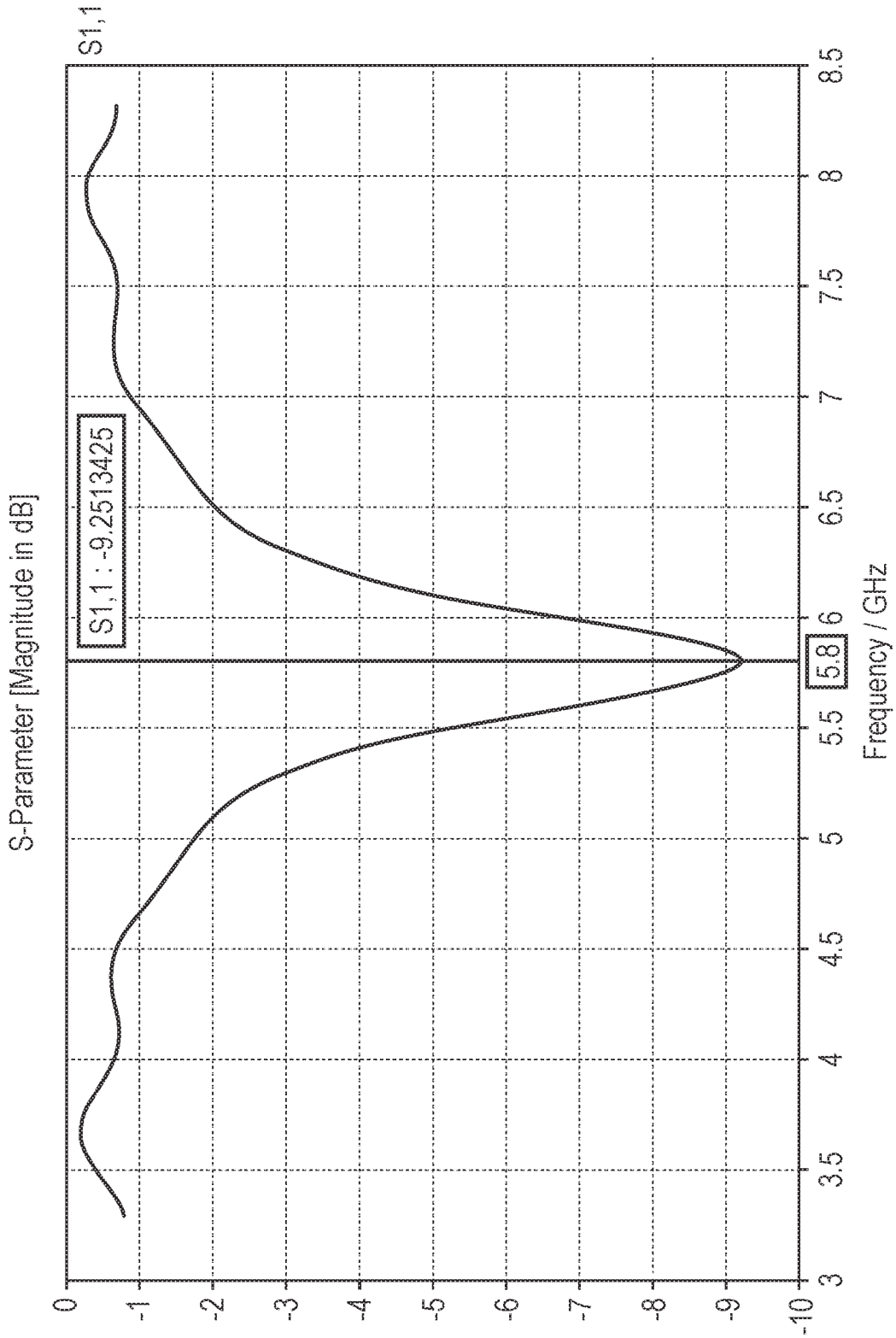
S1,1
S1,1 : -9.2513425
S-Parameter [Magnitude in dB]
0
-1
-2
-3
-4
-5
-6
-7
-8
-9
-10
3
3.5
4
4.5
5
5.5
5.8
6
6.5
7
7.5
8
8.5
Frequency / GHz

FIG. 8

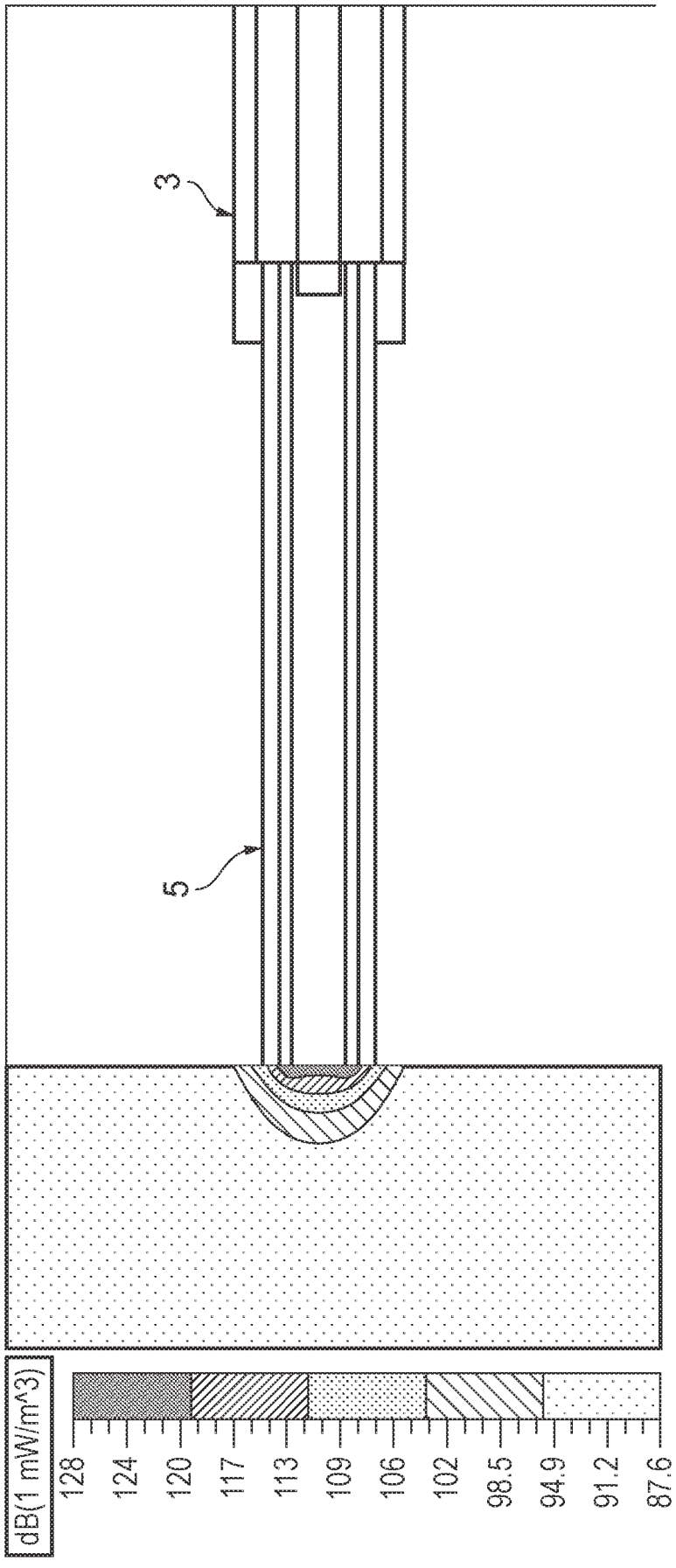

FIG. 9

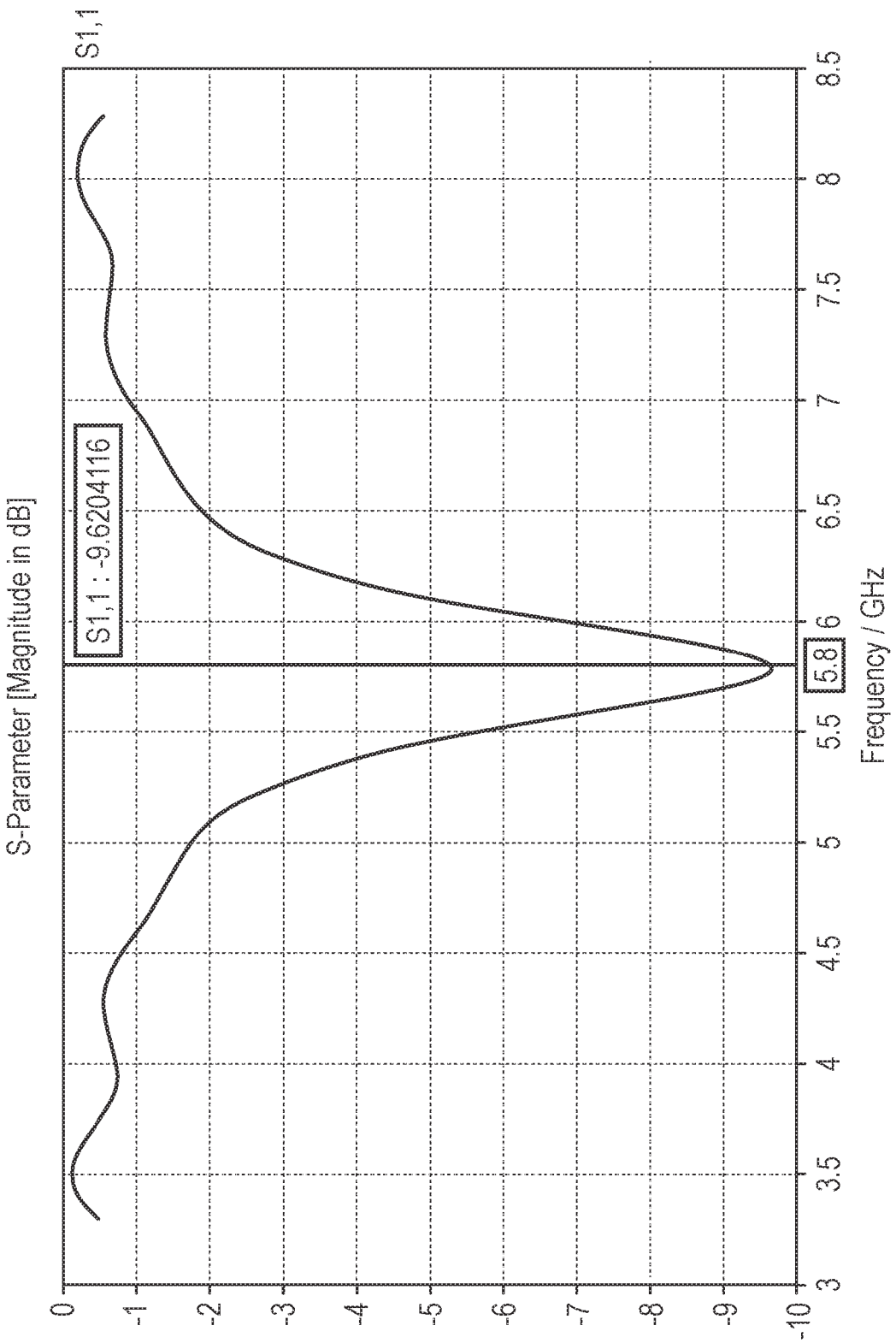
S1,1
S1,1 : -9.6204116
S-Parameter [Magnitude in dB]
0
-1
-2
-3
-4
-5
-6
-7
-8
-9
-10
3
3.5
4
4.5
5
5.5
5.8
6
6.5
7
7.5
8
8.5
Frequency / GHz

FIG. 10

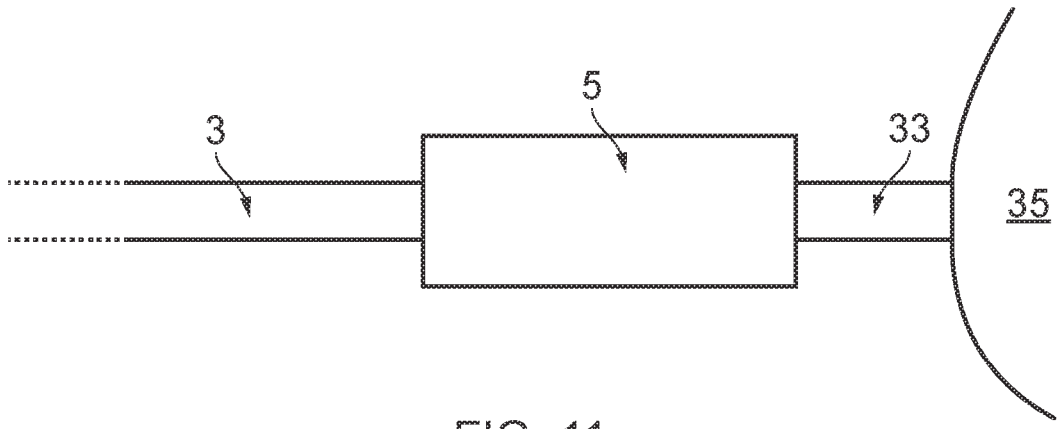

FIG. 11