(12) INTERNATIONAL APPLICATION PUBLISHED UNDER THE PATENT COOPERATION TREATY (PCT)

(19) World Intellectual Property Organization
International Bureau

(43) International Publication Date
09 April 2020 (09.04.2020)

WIPO | PCT

(10) International Publication Number
WO 2020/072240 A1

(51) International Patent Classification:
A63G 7/00 (2006.01)

(21) International Application Number:
PCT/US2019/052702

(22) International Filing Date:
24 September 2019 (24.09.2019)

(25) Filing Language: English

(26) Publication Language: English

(30) Priority Data:

62/740,216	02 October 2018 (02.10.2018)	US
16/533,766	06 August 2019 (06.08.2019)	US

(71) Applicant: **UNIVERSAL CITY STUDIOS LLC** [US/US]; 100 Universal City Plaza, Universal City, California 91608 (US).

(72) Inventor: **MCCORMICK, Dennis**; 1000 Universal Studios Plaza, Orlando, Florida 32819 (US).

(74) Agent: **YEPEZ, Ricardo** et al.; P.O. Box 692289, Houston, Texas 77269 (US).

(81) Designated States *(unless otherwise indicated, for every kind of national protection available)*: AE, AG, AL, AM, AO, AT, AU, AZ, BA, BB, BG, BH, BN, BR, BW, BY, BZ, CA, CH, CL, CN, CO, CR, CU, CZ, DE, DJ, DK, DM, DO, DZ, EC, EE, EG, ES, FI, GB, GD, GE, GH, GM, GT, HN, HR, HU, ID, IL, IN, IR, IS, JO, JP, KE, KG, KH, KN, KP, KR, KW, KZ, LA, LC, LK, LR, LS, LU, LY, MA, MD, ME, MG, MK, MN, MW, MX, MY, MZ, NA, NG, NI, NO, NZ, OM, PA, PE, PG, PH, PL, PT, QA, RO, RS, RU, RW, SA, SC, SD, SE, SG, SK, SL, SM, ST, SV, SY, TH, TJ, TM, TN, TR, TT, TZ, UA, UG, US, UZ, VC, VN, ZA, ZM, ZW.

(84) Designated States *(unless otherwise indicated, for every kind of regional protection available)*: ARIPO (BW, GH, GM, KE, LR, LS, MW, MZ, NA, RW, SD, SL, ST, SZ, TZ, UG, ZM, ZW), Eurasian (AM, AZ, BY, KG, KZ, RU, TJ, TM), European (AL, AT, BE, BG, CH, CY, CZ, DE, DK, EE, ES, FI, FR, GB, GR, HR, HU, IE, IS, IT, LT, LU, LV, MC, MK, MT, NL, NO, PL, PT, RO, RS, SE, SI, SK, SM, TR), OAPI (BF, BJ, CF, CG, CI, CM, GA, GN, GQ, GW, KM, ML, MR, NE, SN, TD, TG).

Declarations under Rule 4.17:

— *as to applicant's entitlement to apply for and be granted a patent (Rule 4.17(ii))*

— *as to the applicant's entitlement to claim the priority of the earlier application (Rule 4.17(iii))*

(54) Title: RIDE EVACUATION SYSTEMS AND METHODS

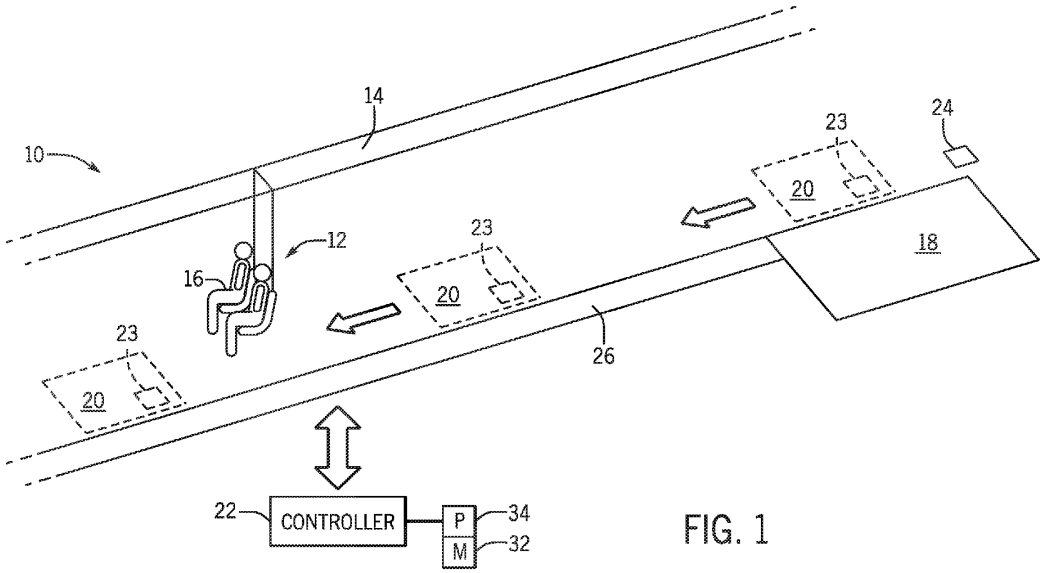

FIG. 1

(57) Abstract: A ride system for an amusement park includes a ride vehicle configured to carry one or more passengers. The ride system further includes a first evacuation platform comprising a first section configured to be moved and disposed underneath the ride vehicle, wherein in use, the one or more passengers evacuate the ride vehicle by exiting onto the first section.

WO 2020/072240 A1

[Continued on next page]

Published:

— *with international search report (Art. 21(3))*

— *before the expiration of the time limit for amending the claims and to be republished in the event of receipt of amendments (Rule 48.2(h))*