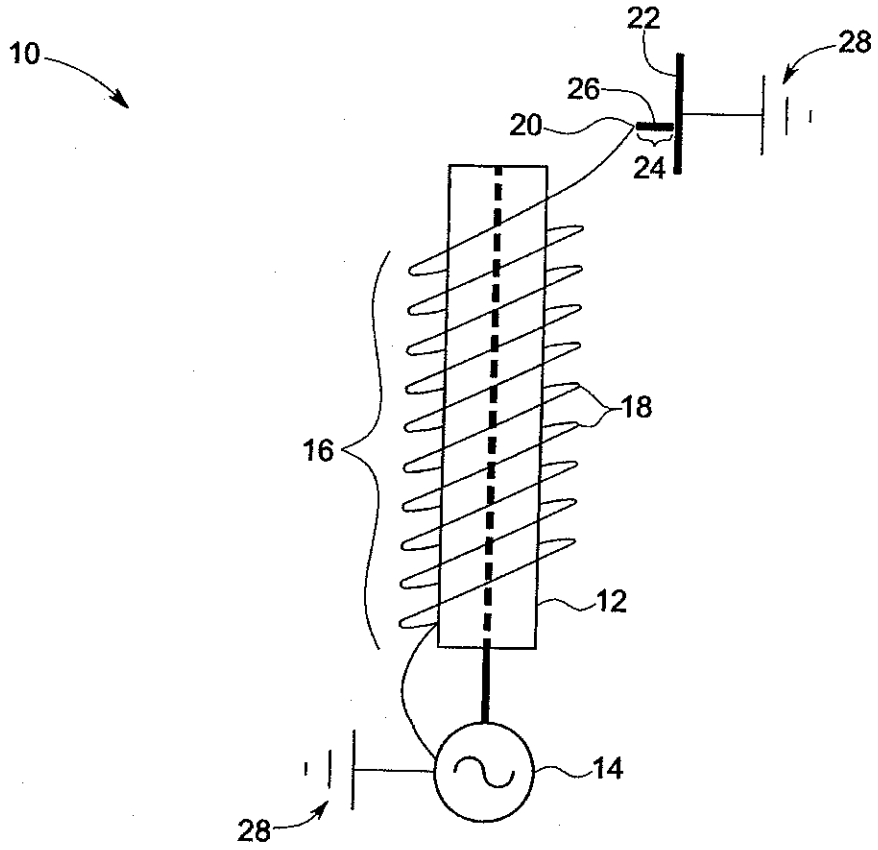
10
22
28
26
20
24
18
16
12
14
28

FIG. 1

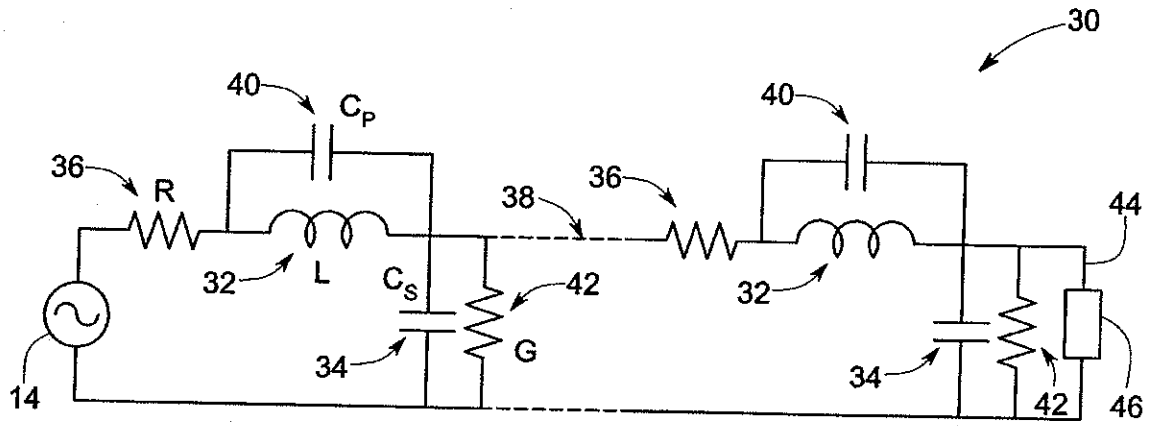
30
40
C_P
40
36
R
38
36
44
32
L
C_S
42
32
G
34
34
14
42
46

FIG. 2

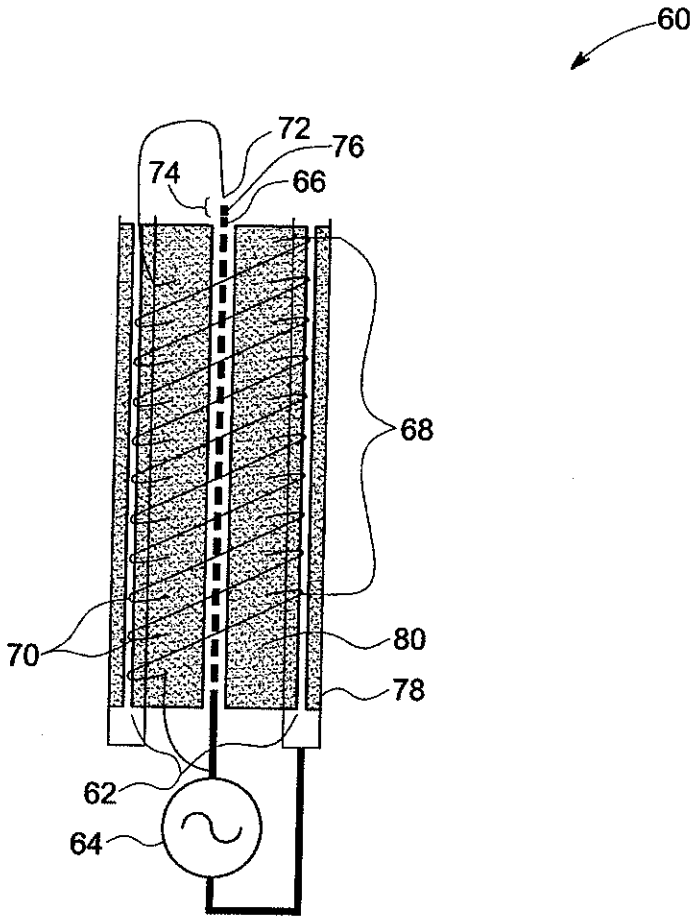
60
72
76
74
66
68
70
80
78
62
64

FIG. 3

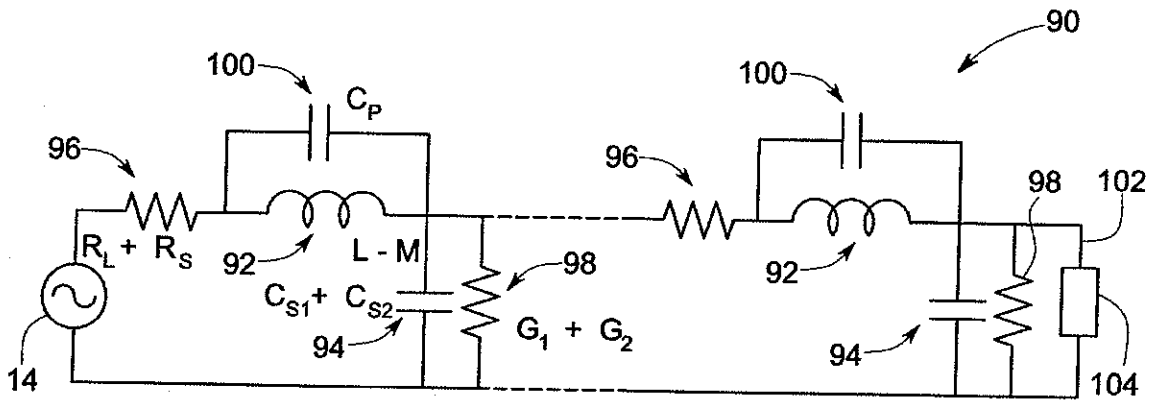
90
100
C_P
96
$R_L + R_S$
92
L - M
$C_{S1} + C_{S2}$
94
98
$G_1 + G_2$
14
100
96
92
98
102
94
104

FIG. 4

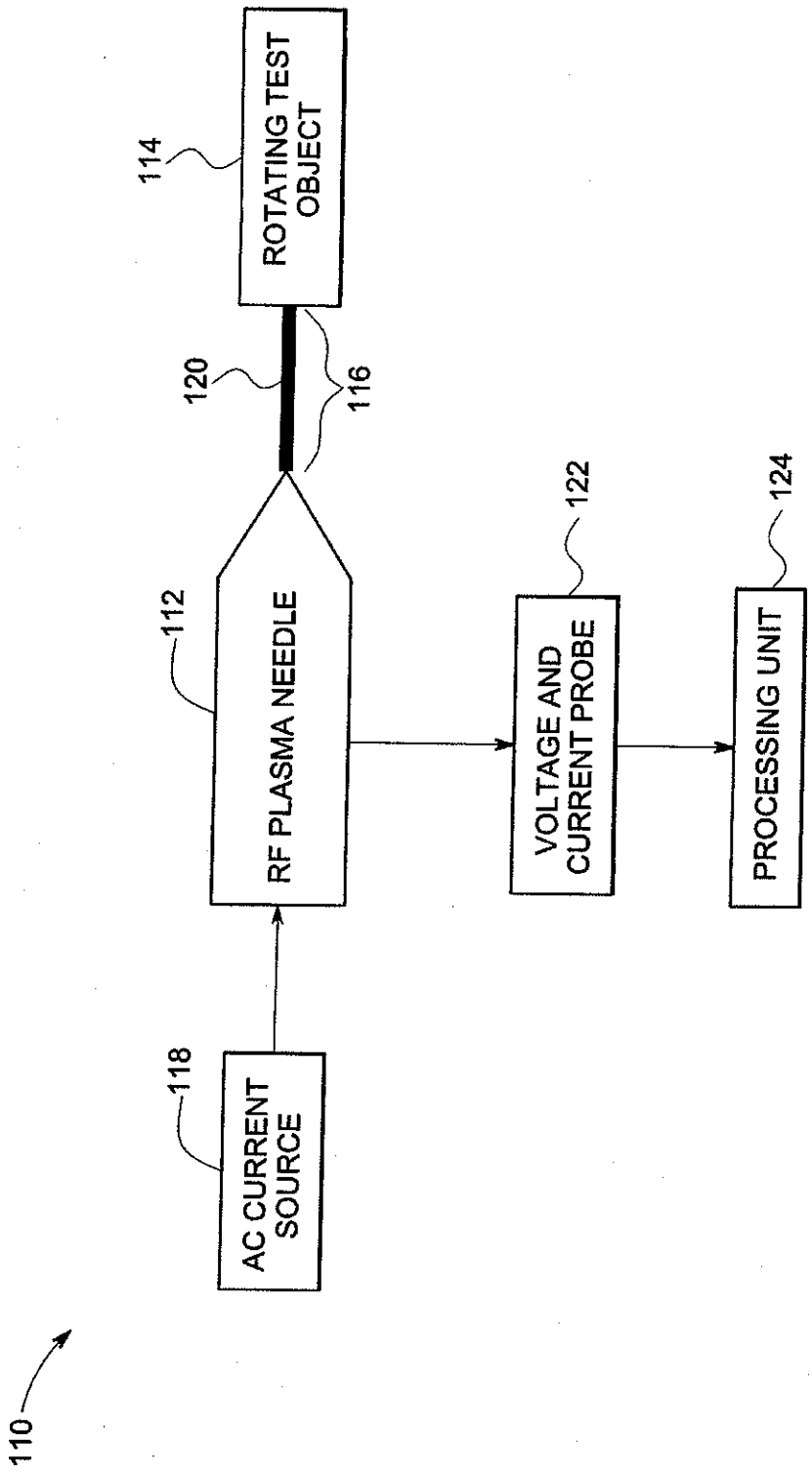
110
AC CURRENT SOURCE
118
RF PLASMA NEEDLE
112
VOLTAGE AND CURRENT PROBE
122
PROCESSING UNIT
124
120
116
ROTATING TEST OBJECT
114

FIG. 5

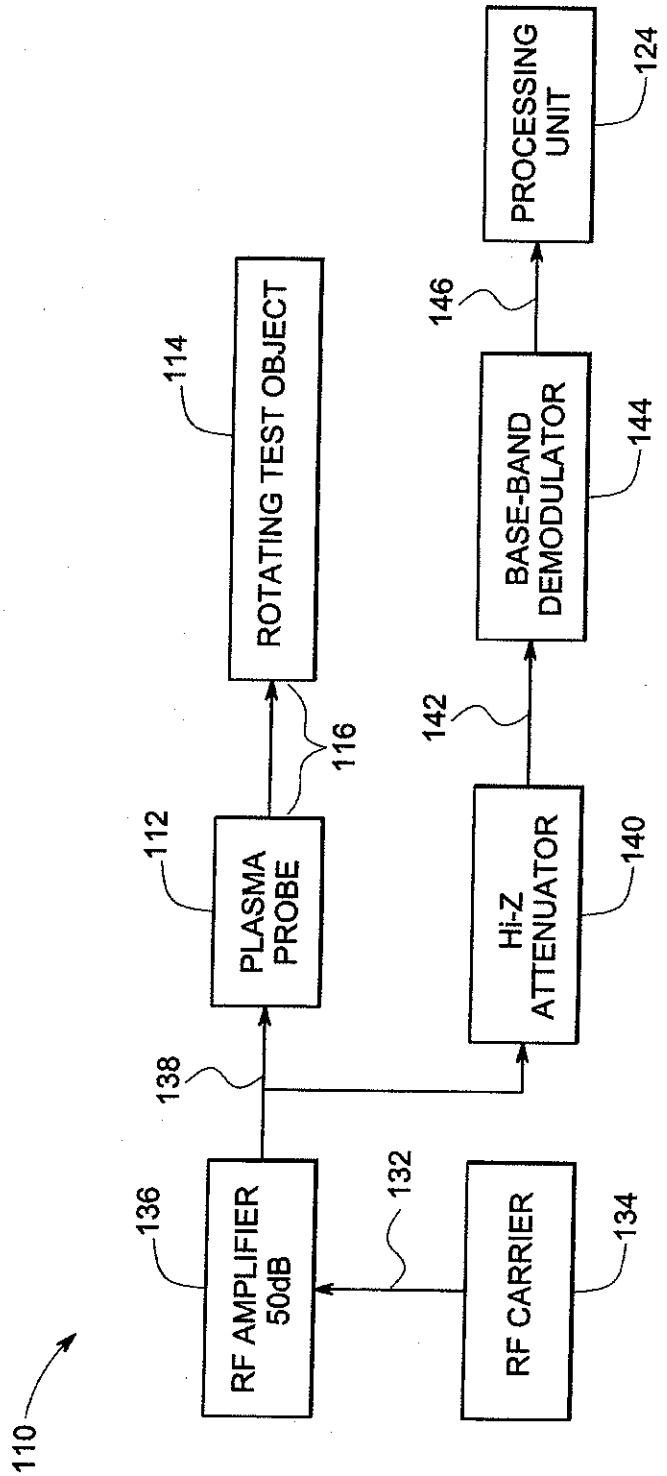
110
RF AMPLIFIER 50dB
136
RF CARRIER
134
132
138
PLASMA PROBE
112
Hi-Z ATTENUATOR
140
ROTATING TEST OBJECT
114
116
BASE-BAND DEMODULATOR
144
142
PROCESSING UNIT
124
146

FIG. 6

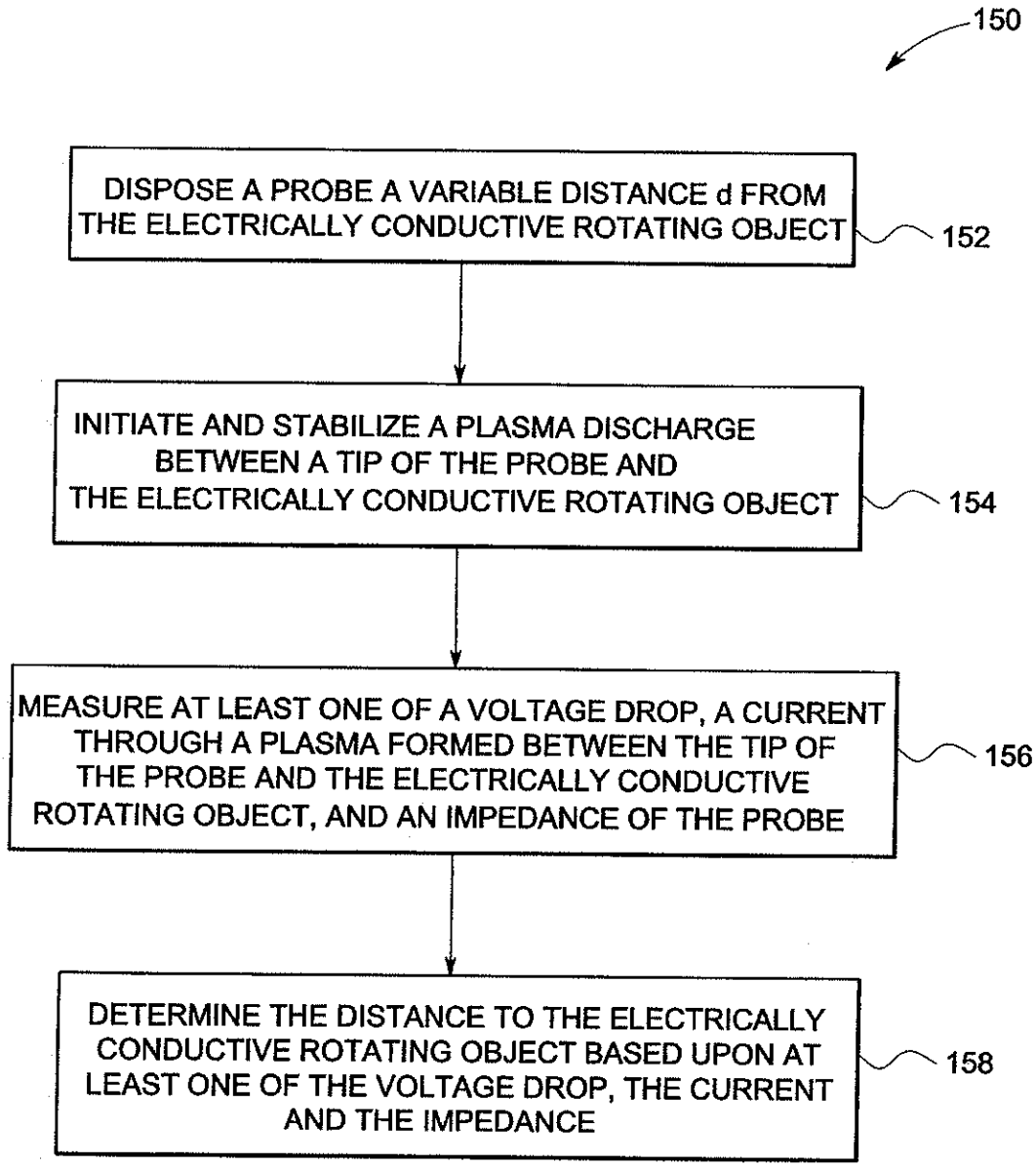
150
DISPOSE A PROBE A VARIABLE DISTANCE d FROM THE ELECTRICALLY CONDUCTIVE ROTATING OBJECT
152
INITIATE AND STABILIZE A PLASMA DISCHARGE BETWEEN A TIP OF THE PROBE AND THE ELECTRICALLY CONDUCTIVE ROTATING OBJECT
154
MEASURE AT LEAST ONE OF A VOLTAGE DROP, A CURRENT THROUGH A PLASMA FORMED BETWEEN THE TIP OF THE PROBE AND THE ELECTRICALLY CONDUCTIVE ROTATING OBJECT, AND AN IMPEDANCE OF THE PROBE
156
DETERMINE THE DISTANCE TO THE ELECTRICALLY CONDUCTIVE ROTATING OBJECT BASED UPON AT LEAST ONE OF THE VOLTAGE DROP, THE CURRENT AND THE IMPEDANCE
158

FIG. 7

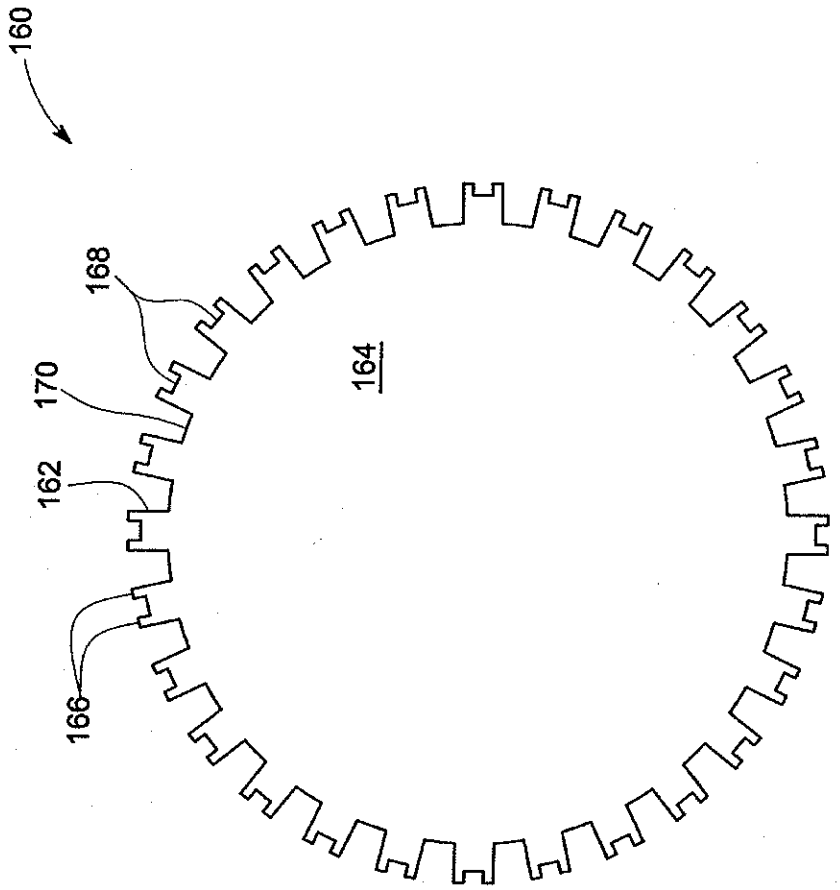

FIG. 8

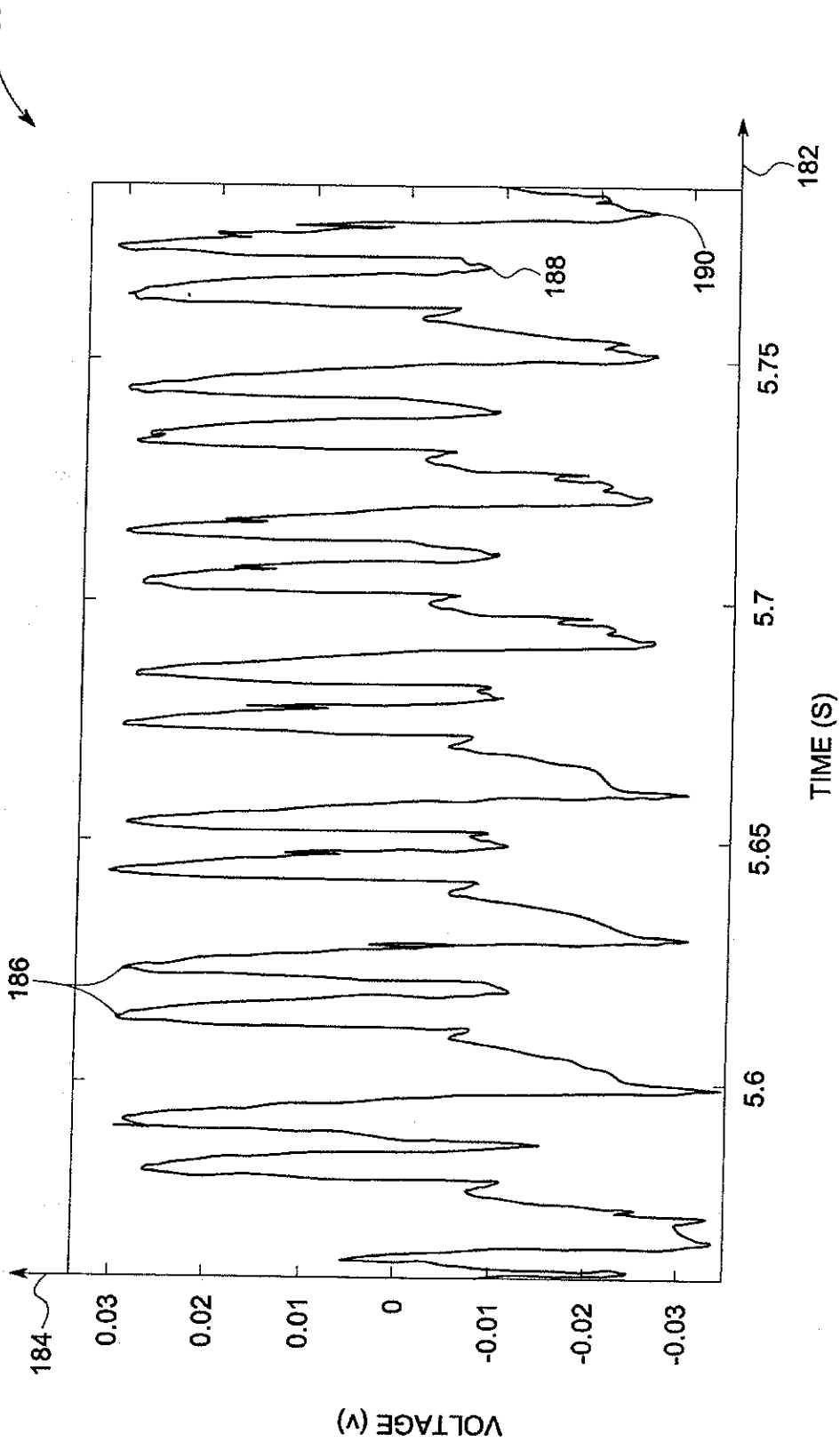
180
182
184
186
188
190
0.03
0.02
0.01
0
-0.01
-0.02
-0.03
VOLTAGE (V)
5.6
5.65
5.7
5.75
TIME (S)

FIG. 9