(12) INTERNATIONAL APPLICATION PUBLISHED UNDER THE PATENT COOPERATION TREATY (PCT)

(19) World Intellectual Property Organization
International Bureau

(43) International Publication Date
10 January 2008 (10.01.2008)

PCT

(10) International Publication Number
WO 2008/003157 A1

(51) International Patent Classification:
F04B 39/00 (2006.01) *F04B 39/16* (2006.01)

(21) International Application Number:
PCT/BR2007/000177

(22) International Filing Date: 5 July 2007 (05.07.2007)

(25) Filing Language: English

(26) Publication Language: English

(30) Priority Data:
PI0602962-0 6 July 2006 (06.07.2006) BR

(71) Applicant *(for all designated States except US)*: **WHIRLPOOL S.A.** [BR/BR]; Avenida das Nações Unidas, 12.995 - 32° andar - Brooklin Novo, 04578-000 São Paulo - SP (BR).

(72) Inventors; and

(75) Inventors/Applicants *(for US only)*: **LINK, Rodrigo** [BR/BR]; Rua das Andorinhas, 855, 89220-021 Joinville - SC (BR). **HILLE, Claudio Roberto** [BR/BR]; Rua Fides Huhn, 125, 89217-170 Joinville - SC (BR).

(74) Agents: **ARNAUD, Antonio M.P.** et al.; Rua José Bonifácio, 93 - 9th floor, 01003-901 São Paulo - SP (BR).

(81) Designated States *(unless otherwise indicated, for every kind of national protection available)*: AE, AG, AL, AM, AT, AU, AZ, BA, BB, BG, BH, BW, BY, BZ, CA, CH, CN, CO, CR, CU, CZ, DE, DK, DM, DO, DZ, EC, EE, EG, ES, FI, GB, GD, GE, GH, GM, GT, HN, HR, HU, ID, IL, IN, IS, JP, KE, KG, KM, KN, KP, KR, KZ, LA, LC, LK, LR, LS, LT, LU, LY, MA, MD, MG, MK, MN, MW, MX, MY, MZ, NA, NG, NI, NO, NZ, OM, PG, PH, PL, PT, RO, RS, RU, SC, SD, SE, SG, SK, SL, SM, SV, SY, TJ, TM, TN, TR, TT, TZ, UA, UG, US, UZ, VC, VN, ZA, ZM, ZW.

(84) Designated States *(unless otherwise indicated, for every kind of regional protection available)*: ARIPO (BW, GH, GM, KE, LS, MW, MZ, NA, SD, SL, SZ, TZ, UG, ZM, ZW), Eurasian (AM, AZ, BY, KG, KZ, MD, RU, TJ, TM), European (AT, BE, BG, CH, CY, CZ, DE, DK, EE, ES, FI, FR, GB, GR, HU, IE, IS, IT, LT, LU, LV, MC, MT, NL, PL, PT, RO, SE, SI, SK, TR), OAPI (BF, BJ, CF, CG, CI, CM, GA, GN, GQ, GW, ML, MR, NE, SN, TD, TG).

[Continued on next page]

(54) Title: ACOUSTIC MUFFLER FOR A REFRIGERATION COMPRESSOR

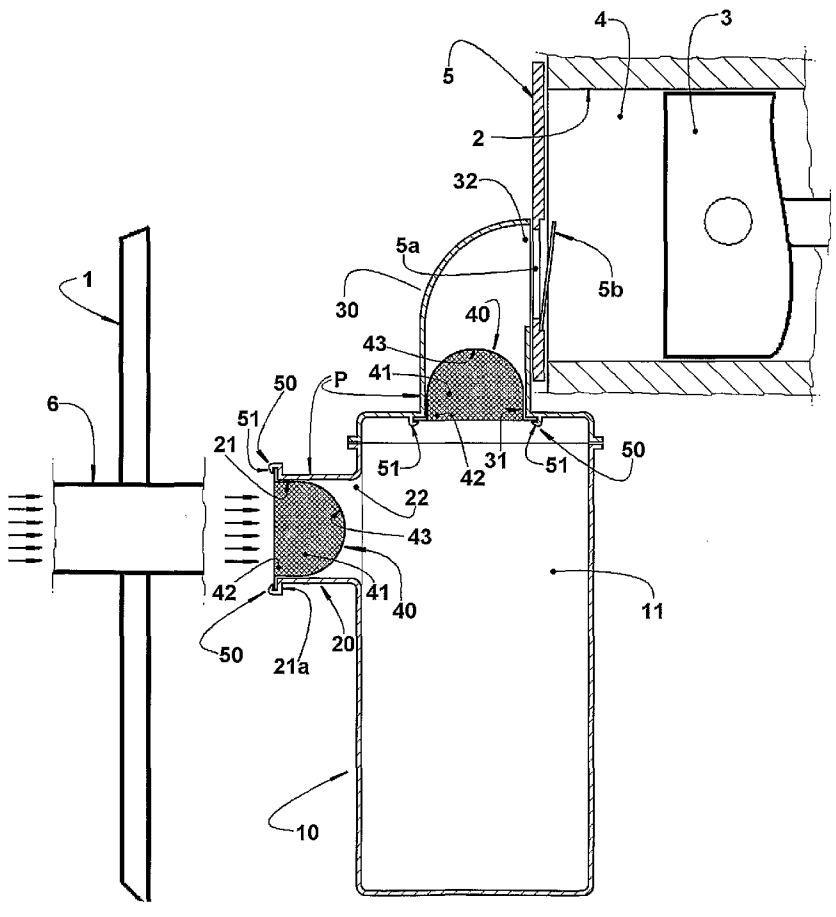

(57) Abstract: The acoustic muffler comprises a hollow body (10) defining at least one muffler chamber (11) which carries a gas inlet duct (20) and a gas outlet duct (30), at least one of the parts defined by the hollow body (10), by the gas inlet duct (20) and by the gas outlet duct (30) defining a gas passage (P) provided with at least one impurity filter (40) presenting a mesh surface (41) larger than that defined by the contour of the cross-section of said gas passage (P) and projecting to at least one of the sides of said cross-section.

WO 2008/003157 A1

Published:
— *with international search report*
— *before the expiration of the time limit for amending the claims and to be republished in the event of receipt of amendments*

For two-letter codes and other abbreviations, refer to the "Guidance Notes on Codes and Abbreviations" appearing at the beginning of each regular issue of the PCT Gazette.