(12) INTERNATIONAL APPLICATION PUBLISHED UNDER THE PATENT COOPERATION TREATY (PCT)

(19) World Intellectual Property Organization
International Bureau

(43) International Publication Date
14 October 2010 (14.10.2010)

PCT

(10) International Publication Number
WO 2010/117733 A3

(51) International Patent Classification:
A61J 3/00 (2006.01) *A61K 9/00* (2006.01)
A61F 9/00 (2006.01) *B65B 3/00* (2006.01)

(21) International Application Number:
PCT/US2010/029085

(22) International Filing Date:
29 March 2010 (29.03.2010)

(25) Filing Language: English

(26) Publication Language: English

(30) Priority Data:
12/414,815 31 March 2009 (31.03.2009) US

(71) Applicant *(for all designated States except US)*: **JOHNSON & JOHNSON VISION CARE, INC.** [US/US]; 7500 Centurion Parkway, Jacksonville, FL 32256 (US).

(72) Inventors; and

(75) Inventors/Applicants *(for US only)*: **TOKARSKI, Jason, M.** [US/US]; 14861 Bulow Creek Drive, Jacksonville, FL 32258 (US). **TREZZA II, Michael, J.** [US/US]; 4 Pheasant Run Road, Great Meadows, NJ 07838 (US). **NATHAN, Aruna** [US/US]; 16 Woodward Drive, Bridgewater, NJ 08807 (US). **CHAOUK, Hassan** [AU/US]; 7944 Hampton Park Boulevard East, Jacksonville, FL 32256 (US). **CHURCH, Ken** [US/US]; 13350 Summer Rain Drive, Orlando, FL 32828 (US). **PARNELL, Phillip, King** [US/US]; 14403 Cherry Lake Drive East, Jacksonville, FL 32258 (US).

(74) Agents: **JOHNSON, Philip, S.** et al.; Johnson & Johnson, 1 Johnson & Johnson Plaza, New Brunswick, NJ 08933 (US).

(81) Designated States *(unless otherwise indicated, for every kind of national protection available)*: AE, AG, AL, AM,

[Continued on next page]

(54) Title: METHODS AND APPARATUS FOR DISPENSING MEDICAMENTS INTO A PUNCTAL PLUG

FIG. 2

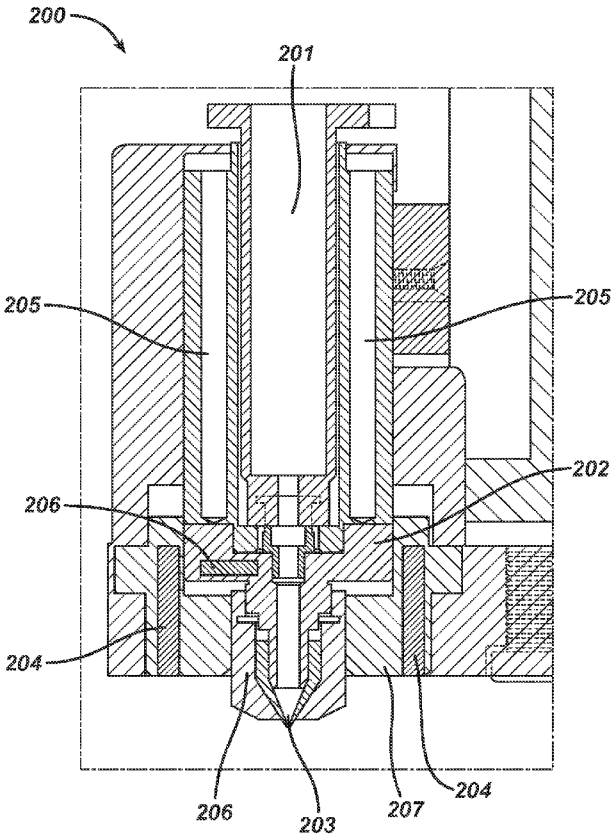

(57) Abstract: This invention discloses methods and apparatus for providing a dispensing a material with an active agent into an ophthalmic device. Some embodiments include dispensing high viscous materials into a punctal plug.

WO 2010/117733 A3

AO, AT, AU, AZ, BA, BB, BG, BH, BR, BW, BY, BZ, CA, CH, CL, CN, CO, CR, CU, CZ, DE, DK, DM, DO, DZ, EC, EE, EG, ES, FI, GB, GD, GE, GH, GM, GT, HN, HR, HU, ID, IL, IN, IS, JP, KE, KG, KM, KN, KP, KR, KZ, LA, LC, LK, LR, LS, LT, LU, LY, MA, MD, ME, MG, MK, MN, MW, MX, MY, MZ, NA, NG, NI, NO, NZ, OM, PE, PG, PH, PL, PT, RO, RS, RU, SC, SD, SE, SG, SK, SL, SM, ST, SV, SY, TH, TJ, TM, TN, TR, TT, TZ, UA, UG, US, UZ, VC, VN, ZA, ZM, ZW.

(84) Designated States *(unless otherwise indicated, for every kind of regional protection available)*: ARIPO (BW, GH, GM, KE, LR, LS, MW, MZ, NA, SD, SL, SZ, TZ, UG, ZM, ZW), Eurasian (AM, AZ, BY, KG, KZ, MD, RU, TJ, TM), European (AT, BE, BG, CH, CY, CZ, DE, DK, EE, ES, FI, FR, GB, GR, HR, HU, IE, IS, IT, LT, LU, LV, MC, MK, MT, NL, NO, PL, PT, RO, SE, SI, SK, SM, TR), OAPI (BF, BJ, CF, CG, CI, CM, GA, GN, GQ, GW, ML, MR, NE, SN, TD, TG).

Declarations under Rule 4.17:

— *as to the identity of the inventor (Rule 4.17(i))*

— *as to applicant's entitlement to apply for and be granted a patent (Rule 4.17(ii))*

— *as to the applicant's entitlement to claim the priority of the earlier application (Rule 4.17(iii))*

Published:

— *with international search report (Art. 21(3))*

— *before the expiration of the time limit for amending the claims and to be republished in the event of receipt of amendments (Rule 48.2(h))*

(88) Date of publication of the international search report:
2 December 2010