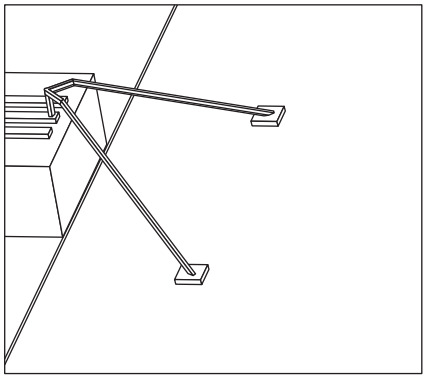

FIG. 1(a)

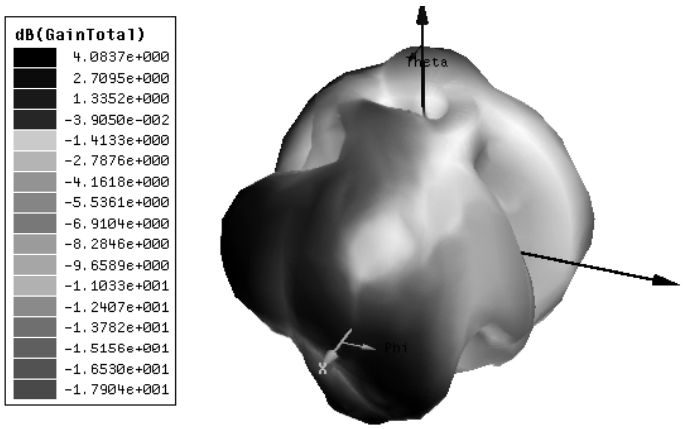

FIG. 1(b)

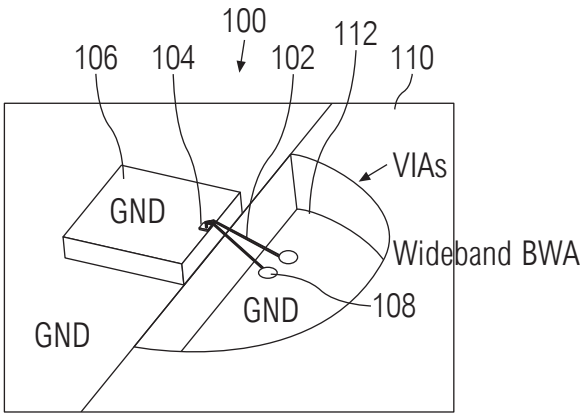

FIG. 2(a)

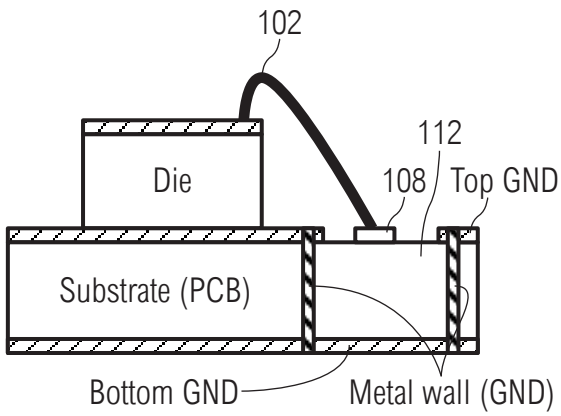

FIG. 2(b)

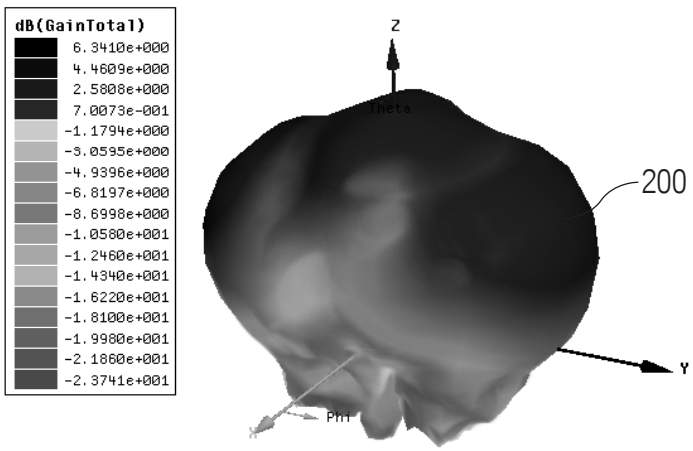

FIG. 2(c)

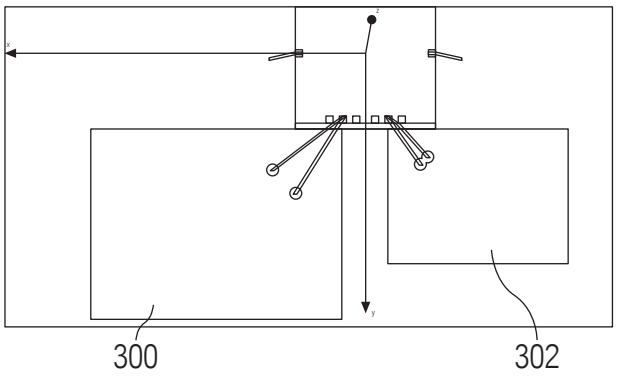

FIG. 3(a)

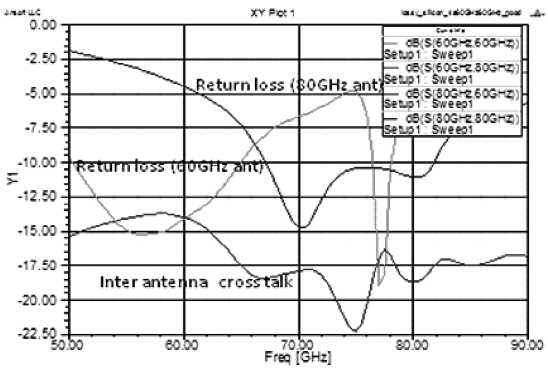

FIG. 3(b)

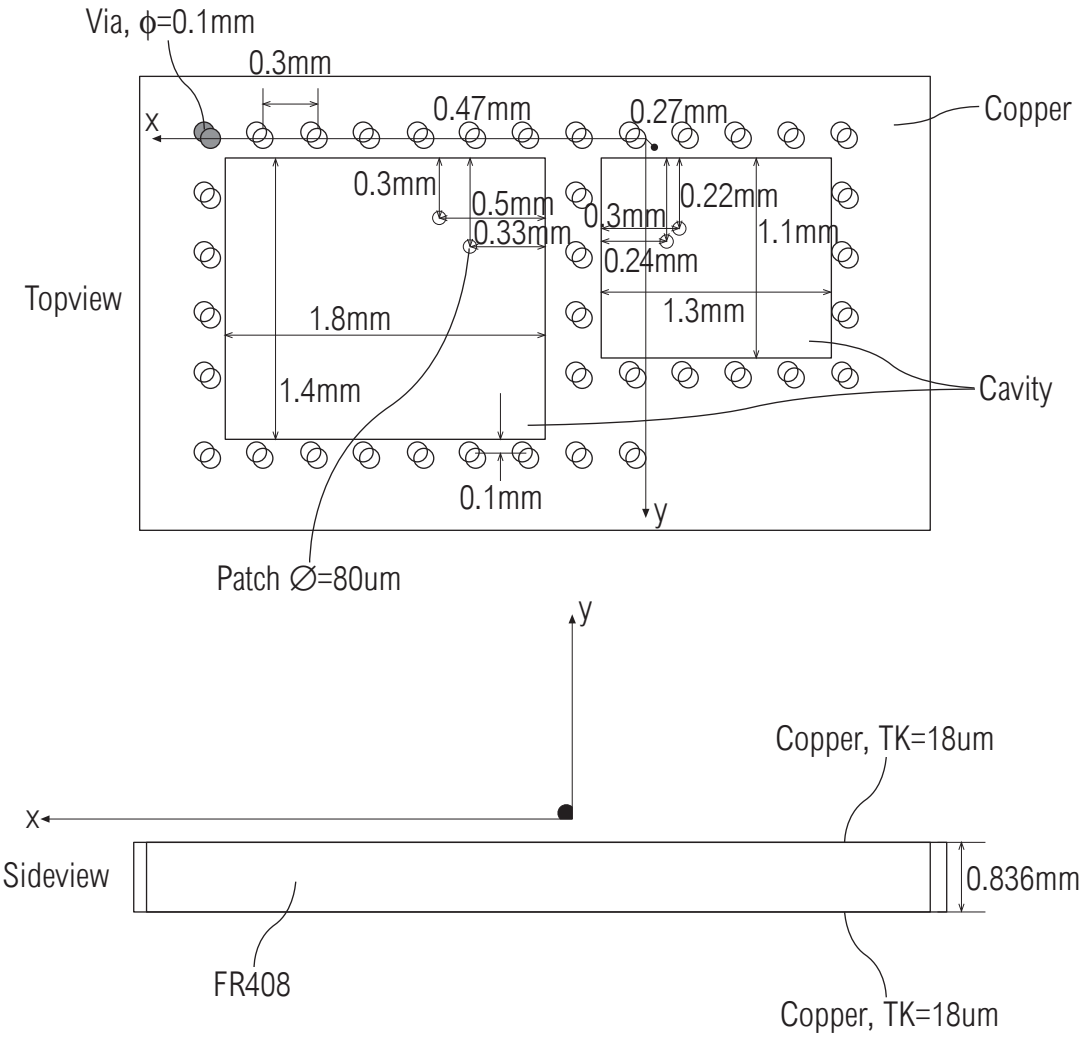

FIG. 3(c)

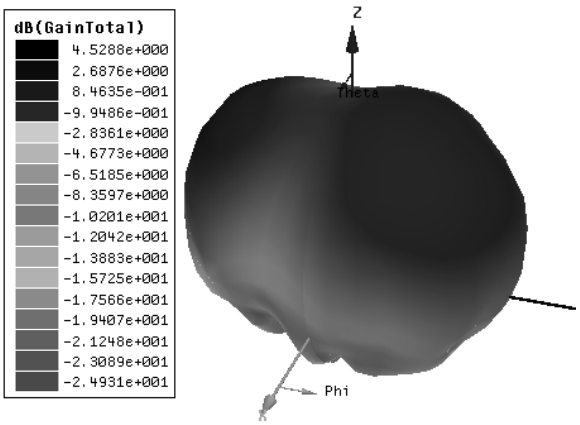
dB(GainTotal)
4.5288e+000
2.6876e+000
8.4635e-001
-9.9486e-001
-2.8361e+000
-4.6773e+000
-6.5185e+000
-8.3597e+000
-1.0201e+001
-1.2042e+001
-1.3883e+001
-1.5725e+001
-1.7566e+001
-1.9407e+001
-2.1248e+001
-2.3089e+001
-2.4931e+001
Z
Theta
Phi

FIG. 3(d)

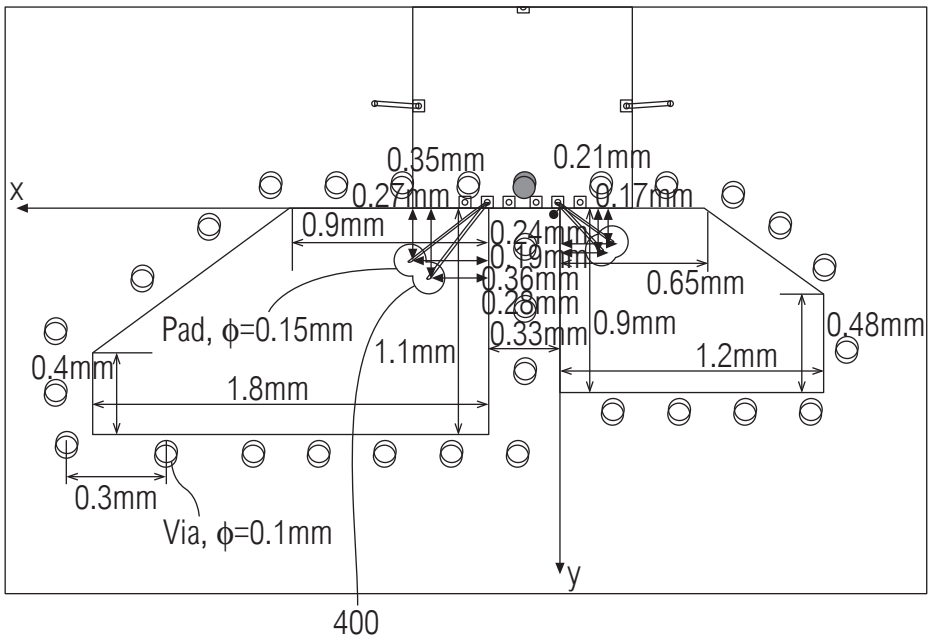
0.35mm
0.21mm
0.27mm
0.17mm
0.9mm
0.24mm
0.36mm
0.65mm
0.28mm
0.33mm
0.9mm
0.48mm
1.2mm
Pad, ϕ=0.15mm
1.1mm
0.4mm
1.8mm
0.3mm
Via, ϕ=0.1mm
x
y
400

FIG. 4

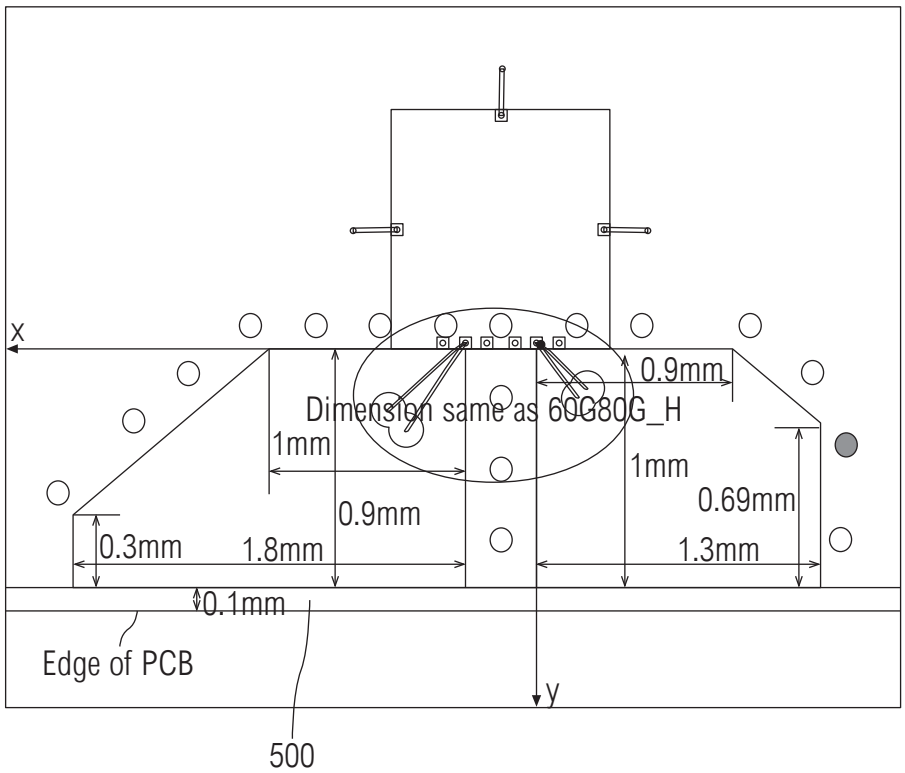
x
0.9mm
Dimension same as 60G80G_H
1mm
1mm
0.69mm
0.9mm
0.3mm
1.8mm
1.3mm
0.1mm
Edge of PCB
y
500

FIG. 5

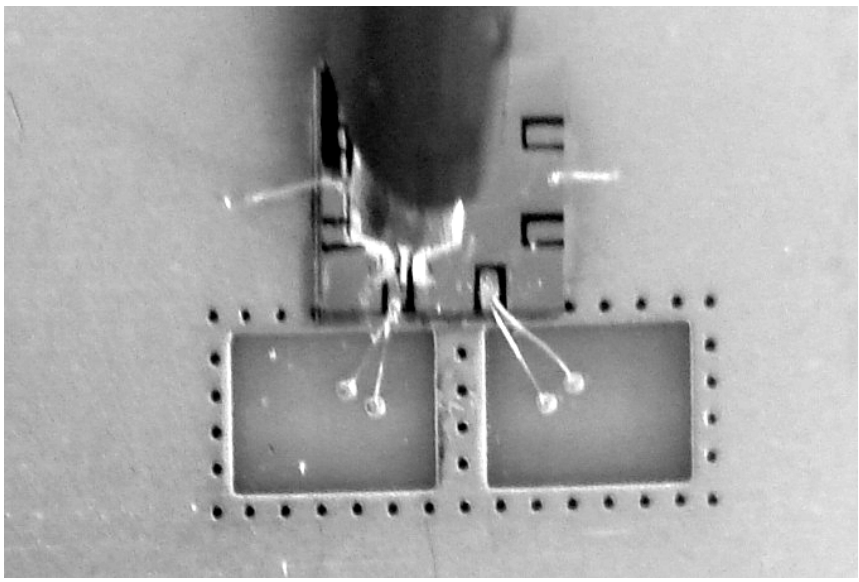

FIG. 6

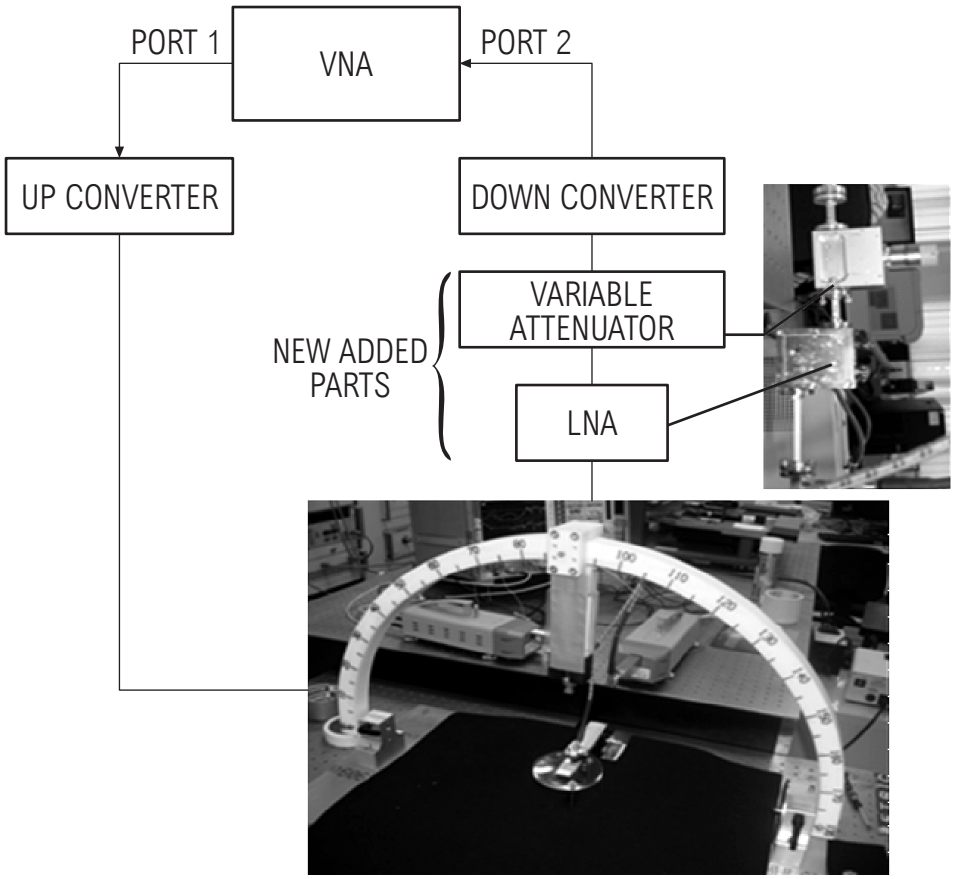

FIG. 7

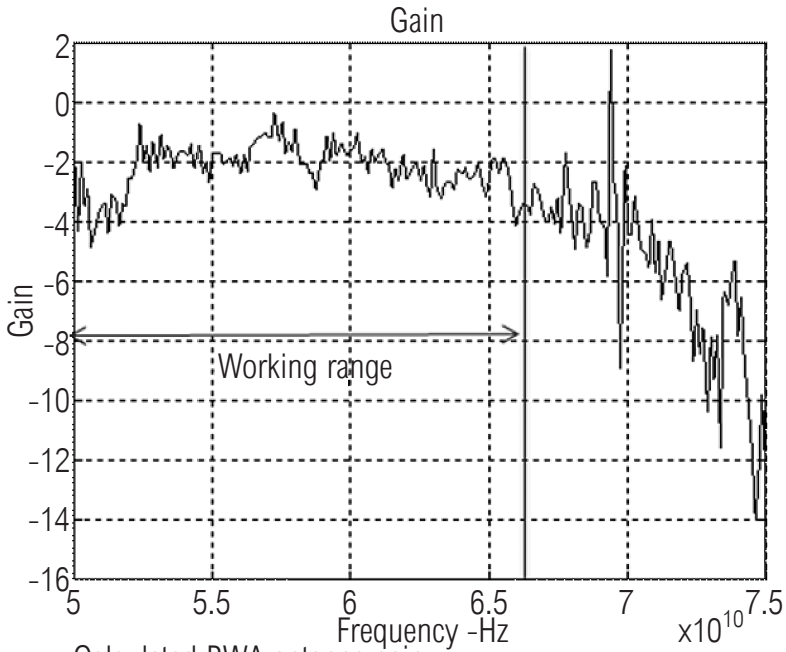

Calculated BWA antenna gain
(Theta=20; Phi=0; Probe effect is not calibrated out;
horn antenna gain is assume as constantly 15dBi)

FIG. 8

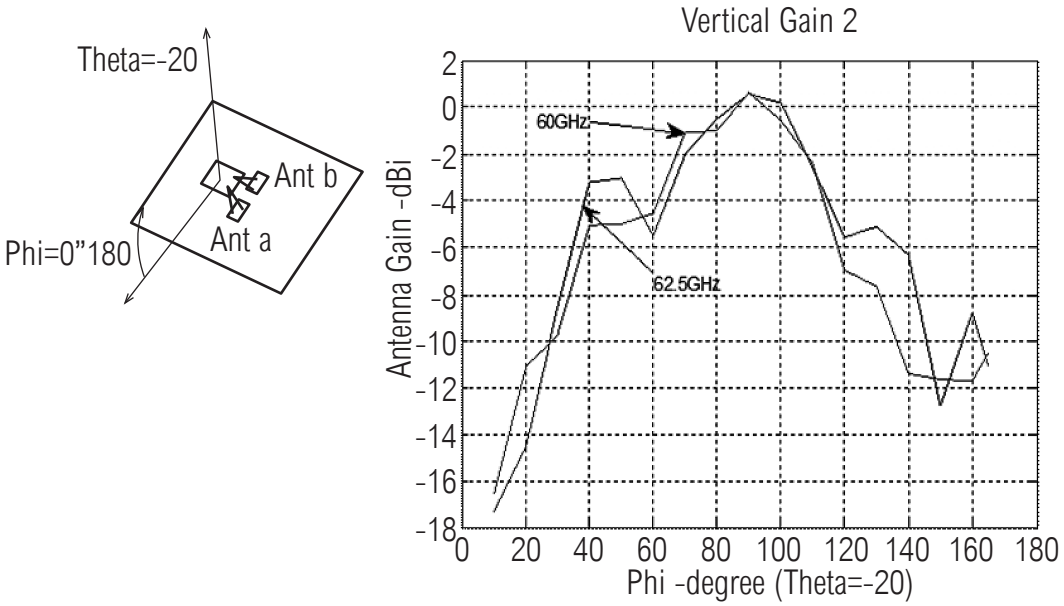
Theta=-20
Ant b
Ant a
Phi=0”180
Vertical Gain 2
60GHz
62.5GHz
Antenna Gain -dBi
Phi -degree (Theta=-20)

FIG. 9(a)

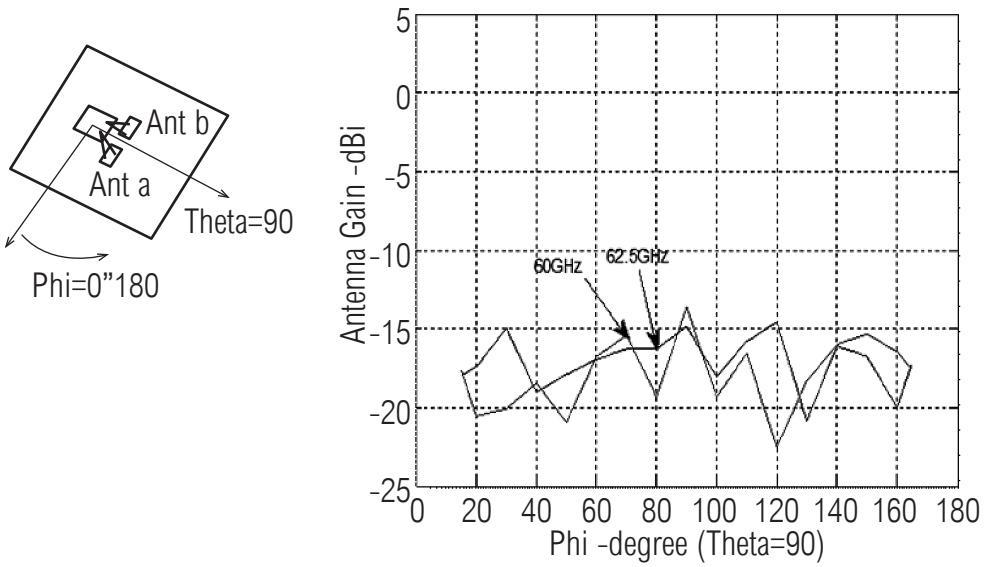
Ant b
Ant a
Theta=90
Phi=0”180
60GHz
62.5GHz
Antenna Gain -dBi
Phi -degree (Theta=90)

FIG. 9(b)

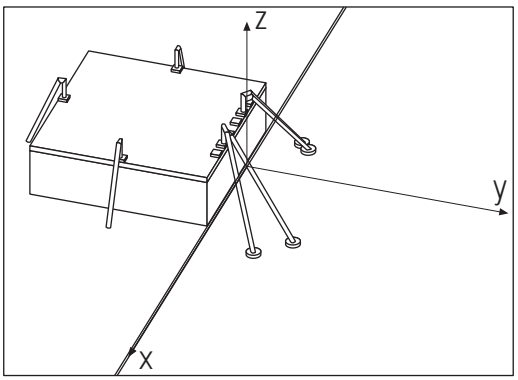

FIG. 10(a)

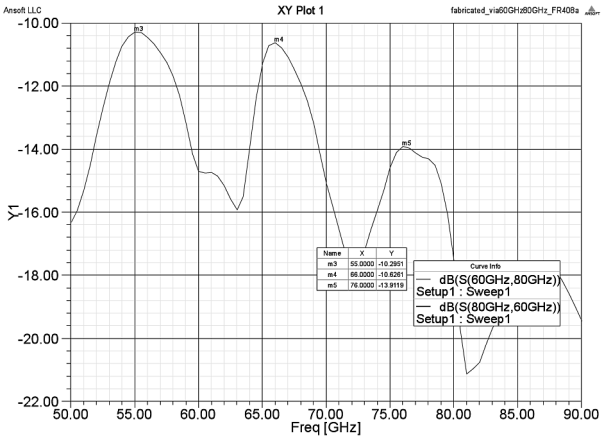

FIG. 10(b)

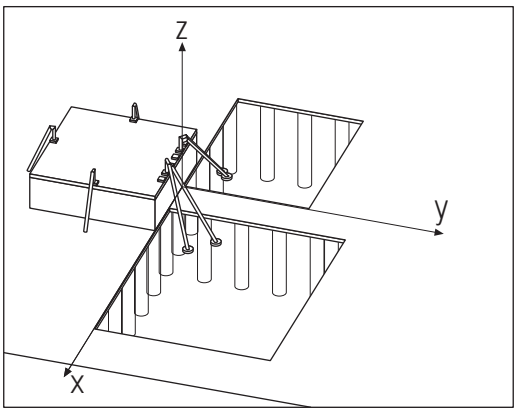

FIG. 11(a)

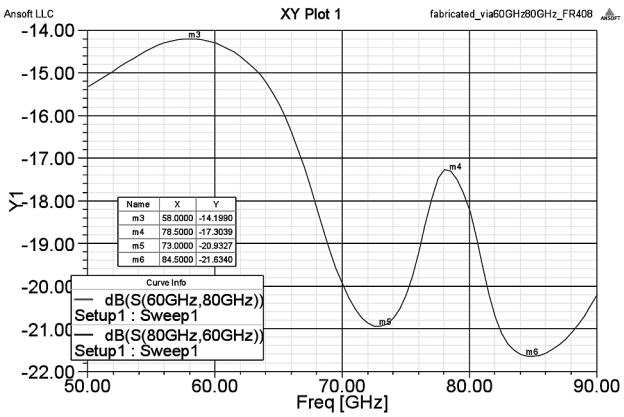

FIG. 11(b)

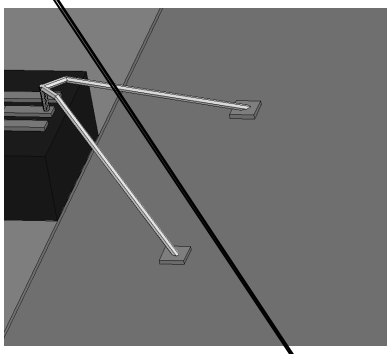

Fig.1(a)

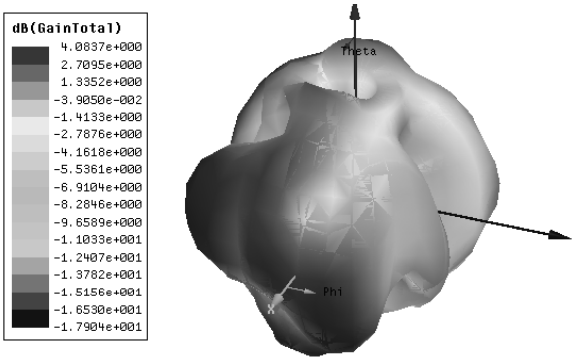

Fig.1(b)

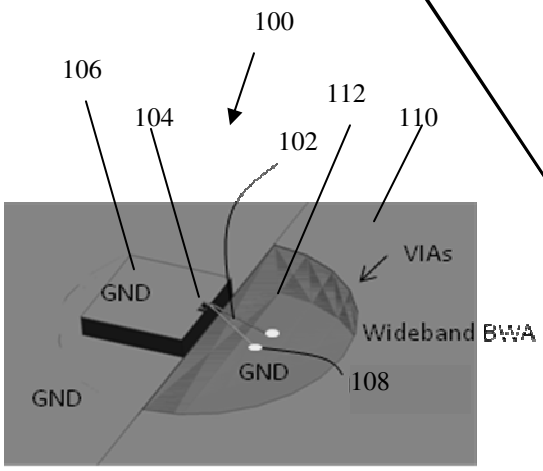

Fig. 2(a)

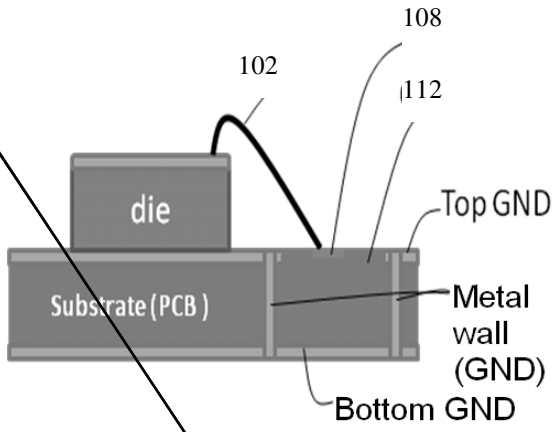

Fig. 2(b)

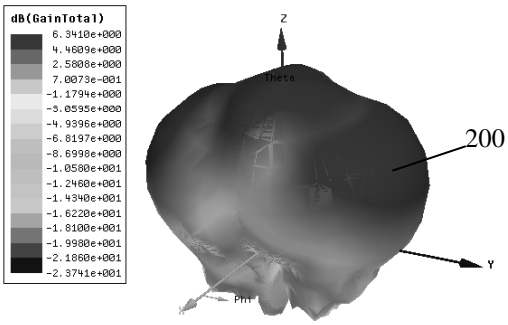

Fig. 2(c)

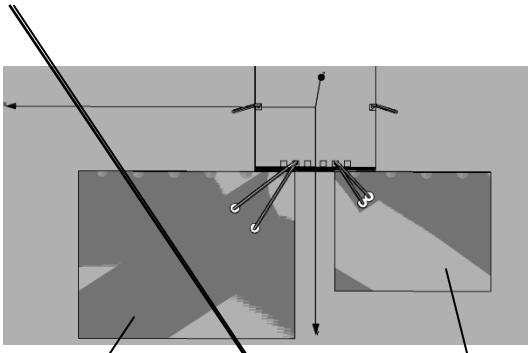

Fig. 3(a)

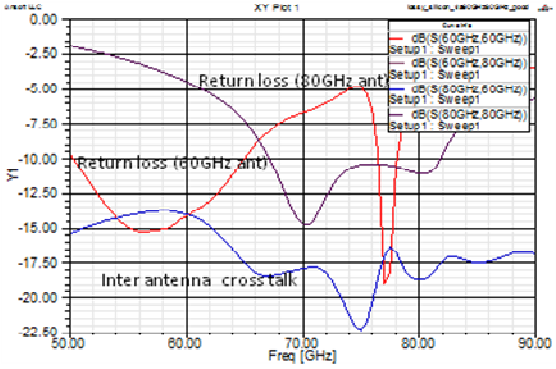

Fig. 3(b)

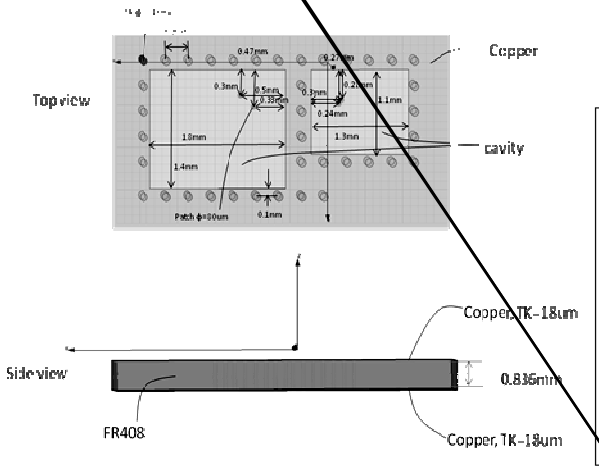

Fig. 3(c)

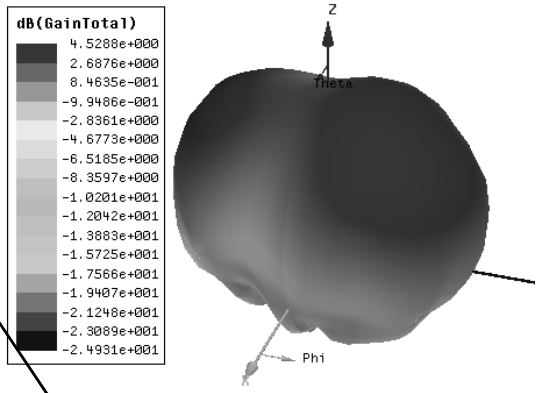

Fig. 3(d)

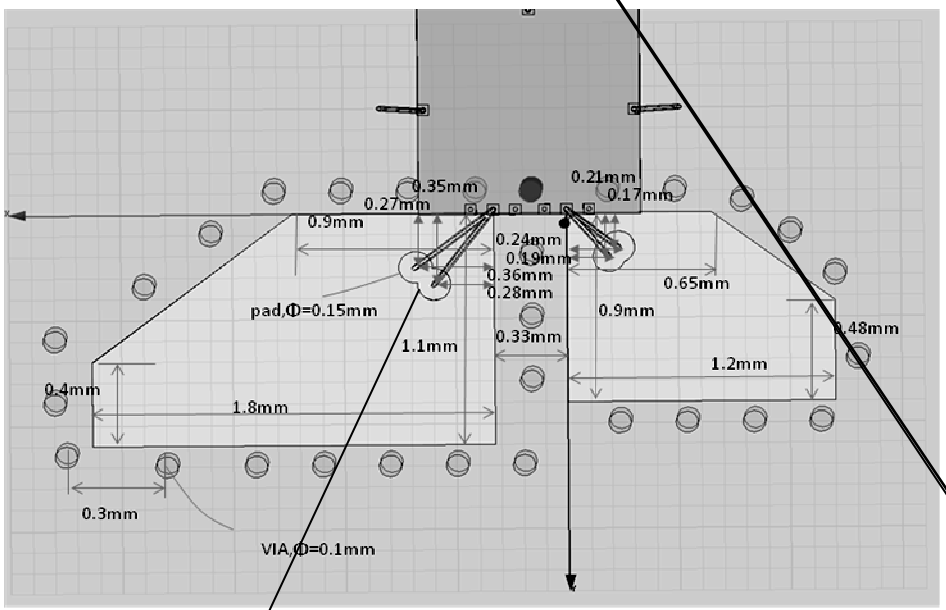

400

Fig.4

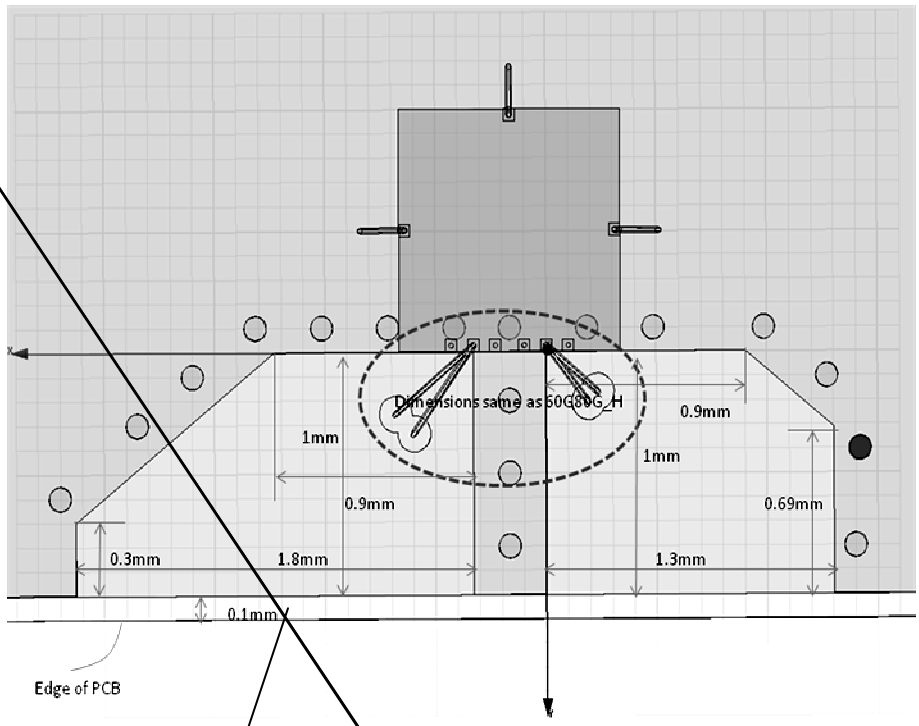
Dimensions same as 50C80G_H
1mm
0.9mm
1mm
0.9mm
0.69mm
0.3mm
1.8mm
1.3mm
0.1mm
Edge of PCB
500

Fig.5

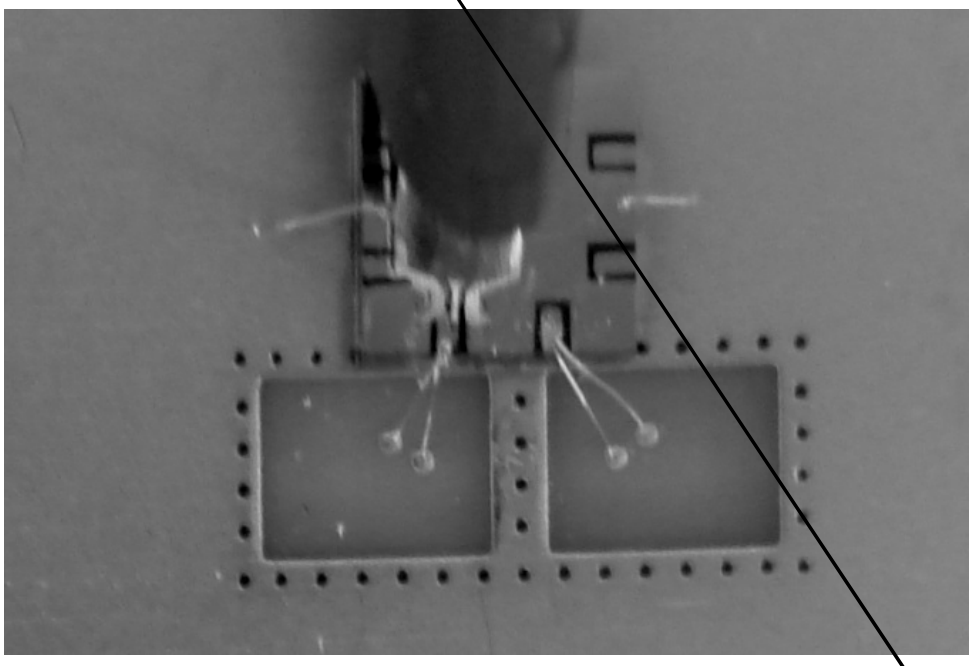

Fig.6

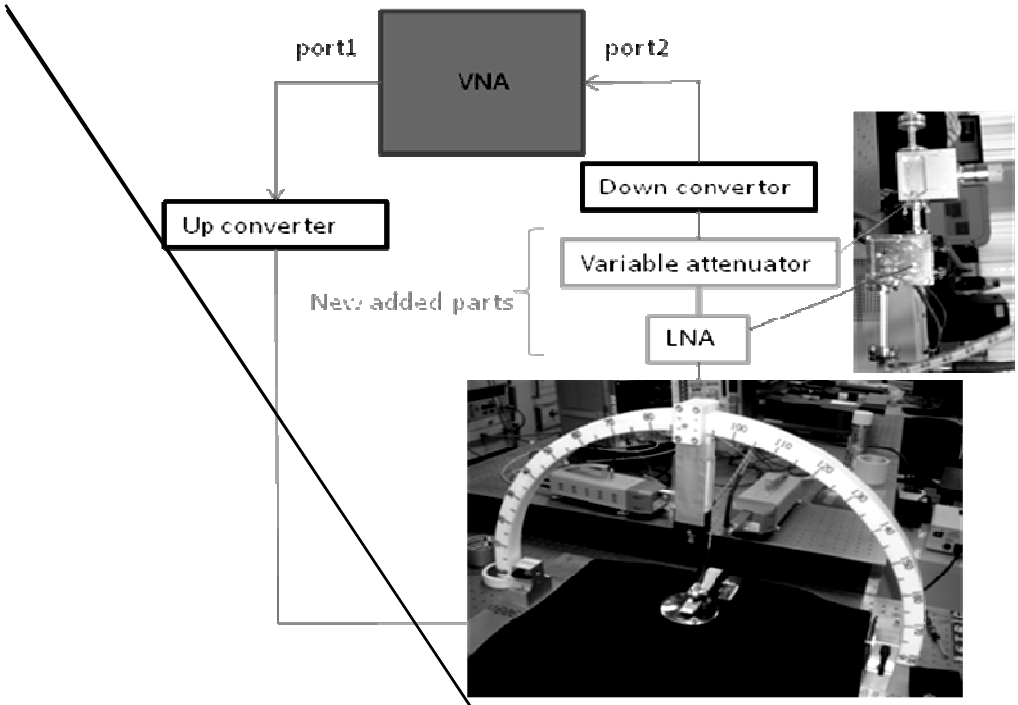

Fig.7

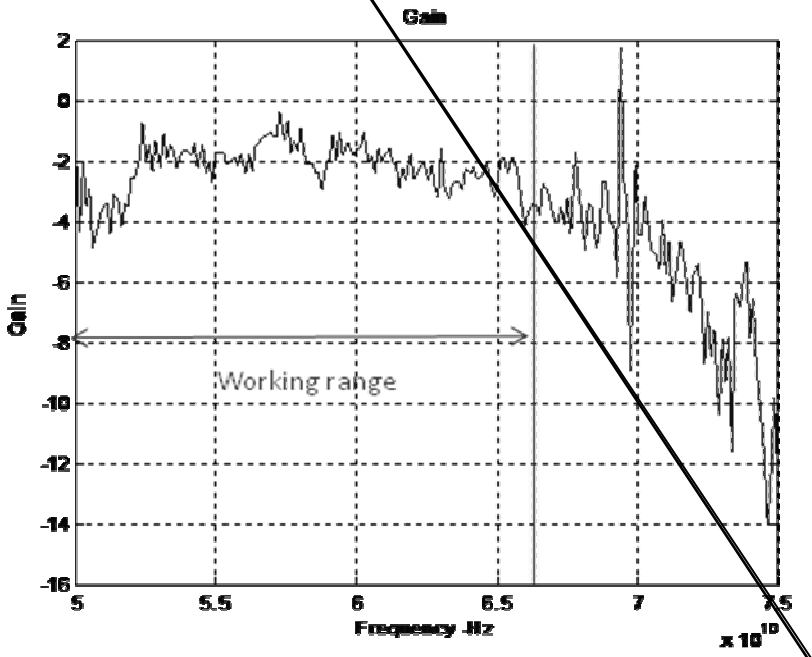

Calculated BWA antenna gain
(Theta=-20: Phi=0: Probe effect is not calibrated out:
horn antenna gain is assume as constantly 15dBi)

Fig.8

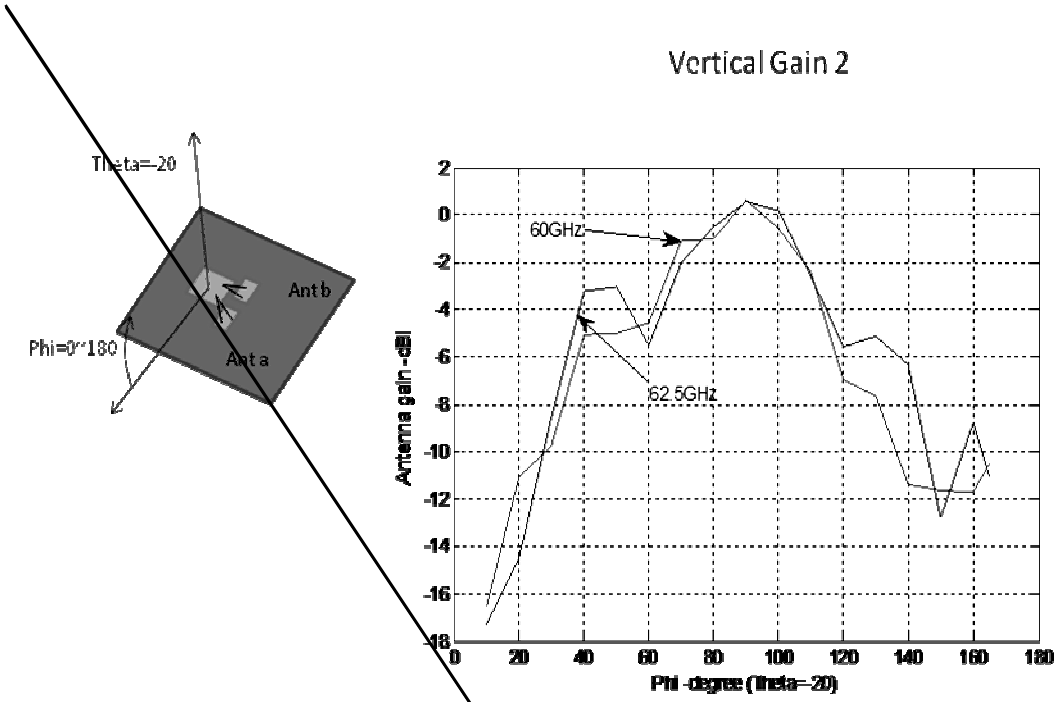
Vertical Gain 2
Theta=-20
Phi=0~180
Ant b
Ant a
60GHz
62.5GHz
Antenna gain -dBi
Phi -degree (Theta=-20)

Fig. 9(a)

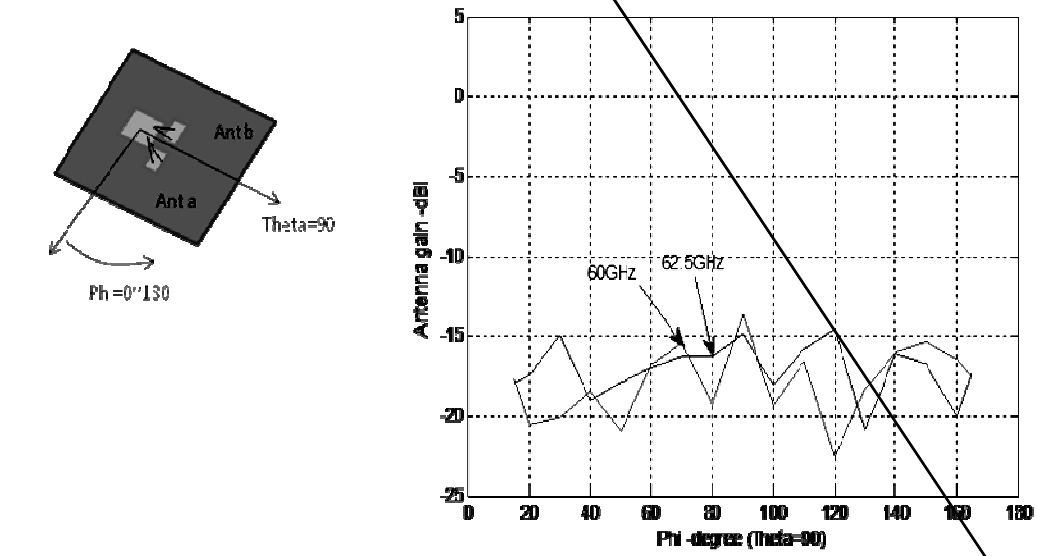
Ant b
Ant a
Theta=90
Ph=0~130
60GHz
62.5GHz
Antenna gain -dBi
Phi -degree (Theta=90)

Fig. 9(b)

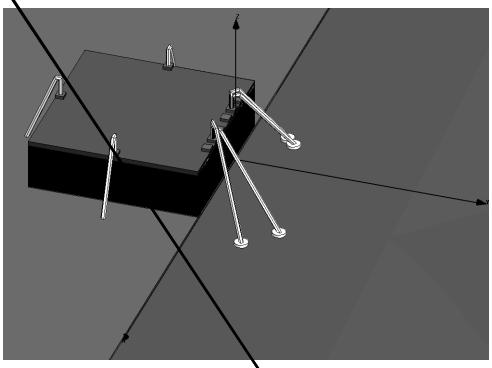

Fig. 10(a)

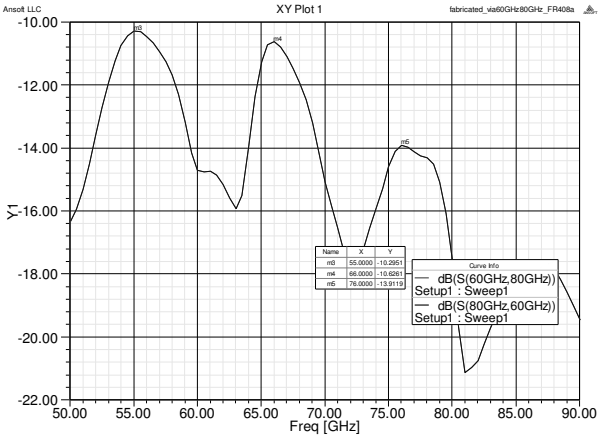

Fig. 10(b)

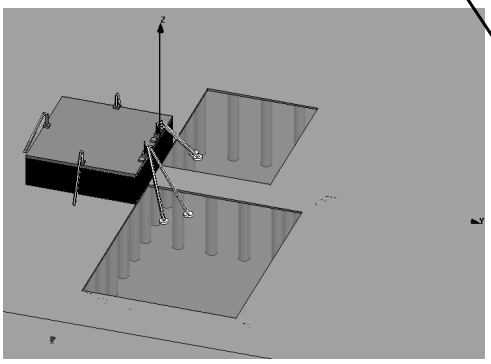

Fig. 11(a)

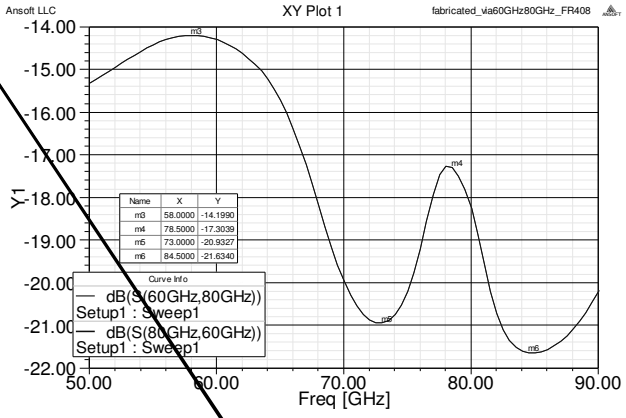

Fig. 11(b)